G. VOELKER.

TYPE WRITING MACHINE.

APPLICATION FILED APR. 25, 1910.

1,130,776.

Patented Mar. 9, 1915.

2 SHEETS—SHEET 1.

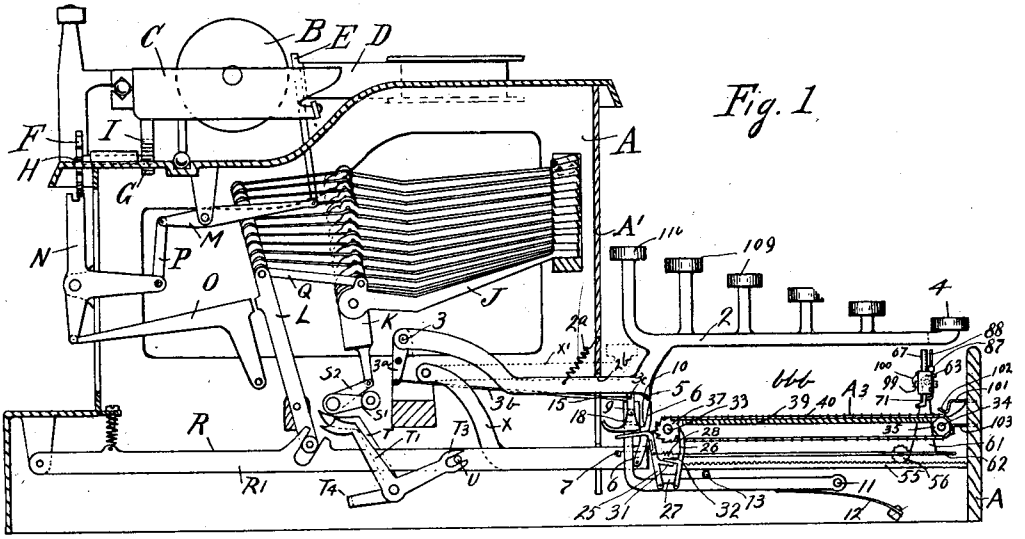

Fig. 1

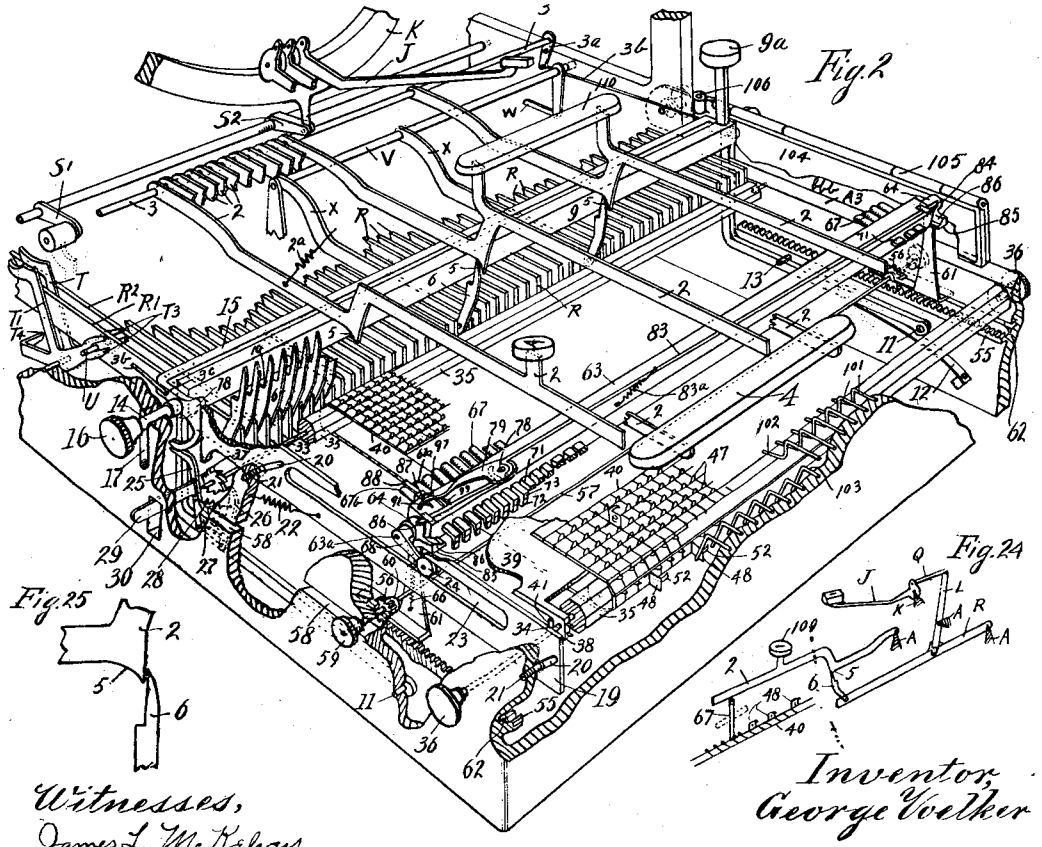

Fig. 2

Fig. 25

Fig. 24

Witnesses,
James L. McKelvey
Arthur Allen.

Inventor,
George Voelker

G. VOELKER.

TYPE WRITING MACHINE.

APPLICATION FILED APR. 25, 1910.

1,130,776.

Patented Mar. 9, 1915.

2 SHEETS—SHEET 2.

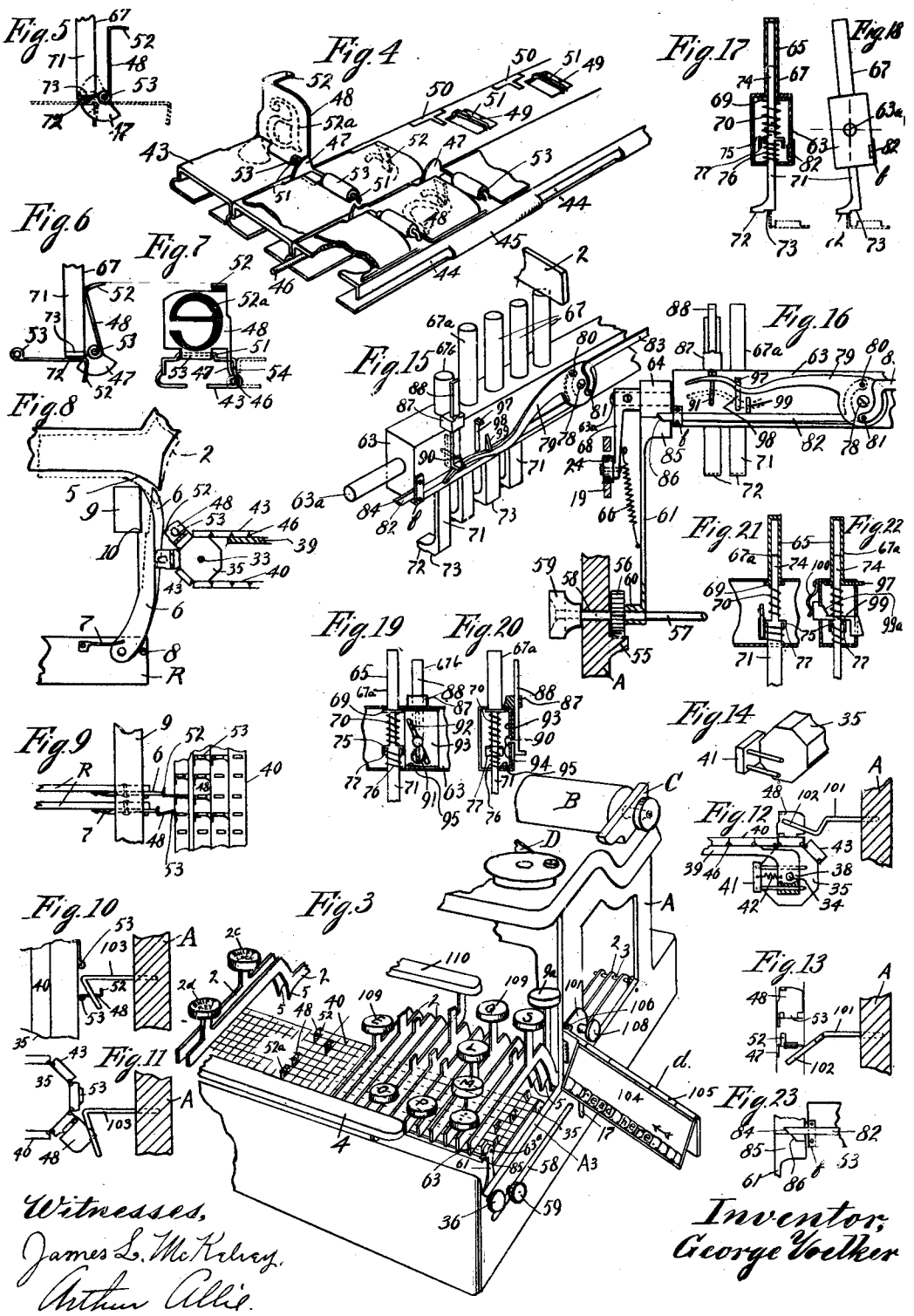

UNITED STATES PATENT OFFICE.

GEORGE VOELKER, OF ST. PAUL, MINNESOTA.

TYPE-WRITING MACHINE.

1,130,776. Specification of Letters Patent. Patented Mar. 9, 1915.

Application filed April 25, 1910. Serial No. 557,372.

To all whom it may concern:

Be it known that I, GEORGE VOELKER, a citizen of the United States, residing at St. Paul, in the county of Ramsey and the State of Minnesota, have invented new and useful Improvements in Type-Writing Machines, of which the following is a specification.

My invention relates to typewriting machines and more particularly to means for controlling the time of printing operation, the invention being especially useful when dictation is taken on the machine. In such work the dictator, desiring to change matter already written, requests the operator to X, or cross out, the words to be changed.

The object of my invention is to provide means by the use of which the X-ing out of written matter is eliminated.

A further object of the invention is to eliminate the necessity of erasing when it is desired to change or take out matter already written; or of inserting matter between lines in cases of omission.

To the above and other ends which will hereinafter appear, my invention consists of the features of construction, arrangement of parts and combination of devices to be set forth in the following specification and particularly pointed out in the appended claims.

In the accompanying drawings like reference characters indicate corresponding parts in the various views.

Figure 1 is a vertical front to rear sectional view of a typewriting machine embodying my invention, parts of the structure being omitted; Fig. 2 is an enlarged perspective view of a part of the keyboard, showing the invention applied to a typewriting machine, the parts being partly broken away; Fig. 3 is a fragmentary perspective view of a typewriting machine, showing the reflector and a portion of the keyboard; Fig. 4 is an enlarged fragmentary perspective view of the index bearing cam leaves carrier; Fig. 5 is an enlarged detail side elevation of one of the index bearing cam leaves; Fig. 6 is a similar view of two leaves showing one of them in different relations; Fig. 7 is an enlarged detail front elevation of one of the cam leaves, showing a portion of the cam leaf carrier; Fig. 8 is a fragmentary detail side elevation showing the cam leaves engaging connecting mechanism; Fig. 9 is a fragmentary plan view of the same; Fig. 10 is a fragmentary detail plan view of the cam carrier showing a leaf in engagement with the lower leaf restoring comb; Fig. 11 is a side elevation of the same; Fig. 12 is a fragmentary detail side elevation of one of the octagonal carrier rolls, showing a cam leaf in engagement with the upper leaf restoring comb; Fig. 13 is a plan view of the same, the roll being omitted; Fig. 14 is a fragmentary perspective view of one end of one of the rolls, showing the alinement clip engaging one of its sides; Fig. 15 is an enlarged fragmentary detail perspective view of the time bar showing some of the leaf setting slides and the shift lock mechanism; Fig. 16 is a fragmentary detail front elevation of the same, but showing also the time bar turning and traveling mechanism; Fig. 17 is a sectional end elevation of the time bar showing the construction of the leaf setting slides or depressors; Fig. 18 is an end elevation of the same shown in different relations; Fig. 19 is a fragmentary, detail, longitudinal, sectional elevation of the time bar, showing some of the shift lock release mechanism; Fig. 20 is a sectional end elevation of the same; Fig. 21 is a fragmentary, detail, longitudinal section of the time bar showing the shift lock latch; Fig. 22 is a sectional end elevation of the same; Fig. 23 is a fragmentary detail front elevation of the time bar showing some of the time bar oscillating mechanism; Fig. 24 is a diagrammatic perspective view showing the mechanism in an approximately vertical plane between a key and its type; and Fig. 25 is a detail view of a fragment of a key lever and its pivoted finger.

There are various styles or kinds of typewriters. I have elected to show my invention on the well known L. C. Smith & Bros. machine, wherein the parts are normally at rest and the keys at the key board are the only power applying source. I do not, however, wish to be confined or limited to any particular style of machine.

My invention may be carried out in any key actuated machine, wherein the depression of a key results in an imprint on the paper of the character indexed on that key.

In my invention, any key in the keyboard can be made, by adjusting suitable mechanism, to perform the functions of any other

previously depressed key or keys. Thus, for example, in writing the words "delayed action". The mechanism having been adjusted to delay printing operation for a period of fifteen characters or letter spaces (the space between words counting for one) the depression of the key indexed "n" will actuate the type "d". It will be noted from the above that fourteen keys had been depressed before printing operation.

My invention provides a moving index, brought to full view before the operator so that he can see the fourteen characters the corresponding keys of which, as above stated, he had previously depressed but none of which has, as yet, printed an impression of its type. If, now, the operator discovers an error or wishes to change the whole fourteen characters or any part thereof, means are provided whereby he can instantly restore the parts to their starting points and he can again utilize the same fourteen letter spaces as he may see fit.

Referring more particularly to Fig. 1 of the drawings A represents the frame of a typewriting machine, B the platen, C the carriage, and D the ribbon. E is the ribbon vibrator or carrier, F the escapement wheel on shaft H, said shaft carrying also the pinion G. I is the usual rack on the carriage into which the pinion G meshes and J are the type bars pivotally hung in the type bar basket K. The basket K has slidable support, not shown, in the frame A. Pivotally supported in the frame A are the levers M and N and the bell crank O, forming with the link P the usual mechanism employed in the L. C. Smith & Bros. machine for engaging the escapement devices and actuating the ribbon carrier. The fulcrumed levers L having pivotal bearings in the frame A have link connections Q with the type bars. At their lower ends they engage the usual key levers R which have been cut off at a point forward of the wall A' to permit of the attachment of my invention. The usual rock shaft S, is journaled in the frame A and carries two rigid arms S' and S^2. The arm S' engages the usual shift lock bell cranks T and T', the cranks having journal bearings in the frame A. The arm S^2 is pivotally connected with the type basket and serves to raise and lower it when the bell cranks T and T' are actuated through the medium of the sub key levers R' and R^2. The levers carry pins U which are adapted to slide in the forked ends T^3 of the cranks. The crank T' has a rearwardly extending finger with an inturned end T^4 said end extending under the lever R^2 and engaging it when the key lever R' is actuated to rock the crank T' and bring it in the position shown in dotted lines in Fig. 2. When the crank T' is in this position (dotted lines Fig. 2) the type basket is locked in raised position so that the upper case type will be in line to print. To unlock the basket and cause it to descend the key lever R^2 must be actuated to strike the end T^4 and thus rock the crank T' out of engagement with the arm S'. The crank T is actuated by the key lever R^2 and engages the arm S' only during the depression of said lever, allowing the basket to descend by gravity when the pressure on the lever is released. The rock shaft V journaled in the frame A is the usual tabulator key support, having a downturned crank arm pivotally connected with link W, which leads to mechanism at the rear of the machine for the purpose of releasing the carriage. The levers X are substitutes for the usual levers X' shown in dotted lines in Fig. 1. It is not deemed necessary to further describe the above usual typewriting mechanism, except so far as a more detailed description may be necessary to understand the relations of my invention thereto.

Referring to the drawings, 2 represents a main key lever, a row of which extend forward of the main body of the machine and are pivotally mounted on the shaft 3, said shaft having a fulcrumed lever 3^a fastened at each of its ends. The levers 3^a are fulcrumed in the frame A and pivotally connect at their outer ends with a rod 3^b, said rod having eccentric pivotal connection 3^c with the bail 15. Each key lever has a retaining spring 2^a to hold it normally against the edge 2^b of the wall A' of the frame A. The key levers 2 extend forwardly in a horizontal plane across the entire keyboard and end in close proximity to the spacing key 4. Each key lever is paired with one of the type bars of the machine. Intermediate of its length each key lever has an offset, the shoulder, thus formed, terminating in a downwardly curved cam face 5. This cam face engages the top of the upwardly projecting finger 6 (Fig. 8) one of which is pivotally mounted on the end of each of the sub key levers R. The spring 7 tends to hold the finger disengaged from the bar 9 by pressing it against the stop pin 8. The universal bar 9, which carries a finger key 9^a at one of its ends, extends laterally across the keyboard and is above the ends of the sub key levers R. It is in a position to engage the notches 10 in the fingers 6 when said fingers are slightly moved about their pivots, so as to rest against it. Its ends project downwardly and forwardly, forming a yoke with pivotal bearings 11 in the frame A. A spring 12 constantly tends to press it upwardly against the pins 13. Journaled in the ends of the bar 9 are the shafts 14 upon which is rigidly mounted the bail 15. The shafts and the bail can be conveniently turned by grasping the thumb nuts 16 which are fast on the shaft. The shafts 14 project through the vertical slotted hole 17

in the frame A, which permits of the depression of the bar 9. The bail is provided at one end with a flat sided cam 18, adapted to act upon the end of a slotted plate 19, said plate having two diagonal slots 20 parallel to each other, through which pass loosely the screws 21 into the frame A. A spring 22 tends constantly to move the plate toward the cam 18. The comparatively long slot 23 in the plate 19 is of a size to loosely receive the antifriction roller 24, the purpose of which will be more specifically hereinafter set forth. On one of the downwardly and forwardly projecting members of the universal bar 9 are pivotally mounted a finger dog 25 and a pawl 26. The dog and pawl are separated by a block 27, against the opposite sides of which each is pressed by the spring 28, which tends constantly to bring them together. The dog is provided at its side with a finger plate 29, which projects through the hole 30 in the frame A. The dog and pawl are each provided with a tooth 31 and 32, respectively, projecting from their sides and toward each other. The tooth 32 is above and overlaps the tooth 31, so that a slight rearward movement of the dog will stretch the spring 28 and separate the dog and pawl. It will be noted upon inspection of the drawings, that the dog is adapted to engage at its top the cam 18 so that the turning of the bail 15 will separate the dog and pawl as shown in Fig. 2.

Journaled in the sides of the frame A and parallel to the bar 9 are the shafts 33 and 34, upon each of which is rigidly mounted an octagonal roll 35 which for reasons hereinafter explained will also hereinafter be referred to as jacquard carriers. The shaft 34 passes through the frame A and has at each end a thumb nut 36. The shaft 33 has at one end and rigidly mounted thereon, a toothed wheel 37, which engages the pawl 26 when the bail 15 is in the position shown in Fig. 1. Supported at its four corners by the shafts 33 and 34, by means of the journals 38, is a jacquard supporting table 39, with its top surface level with the tops of the roll 35. Supported to prevent sagging by the table 39, and firmly stretched over the rolls 35, is an endless carrier or conveyer 40, also to be hereinafter referred to as an endless jacquard adapted to conform to the periphery of said rolls and to travel over them when they are turned about their bearings. For the purpose of movably holding the rolls positioned, so that each shall have two of its sides in a horizontal plane, the clip 41 has a spring 42 to pull it against one side of the roll.

The jacquard 40 comprises a series of comparatively long hollow sections 43, preferably bent of one flat piece and alternately punched and stamped as at 44 and 45, so that it will mesh with its adjacent section and permit of the insertion of a rod 46, thus forming a hinge joint as shown in Fig. 7. The sections 43 are as wide as the sides of the octagonal rolls and are of sufficient height to contain the friction plate 47 of the cam leaf 48. It will be noted, that each of the sections 43, has in its top plate a series of holes 49 and 50. The hole 49 is spanned with the bar 51 upon which swings the cam leaf 48, the friction plate 47 of which enters freely the hole 50. The cam leaf has at its top the curved ear 52, and on its face (which is normally turned down) an index 52^a, which is identical with the type on its corresponding type bar in the type basket K. The curved ear 52 is concentric with the leaf hinge 53, and has its underside painted black to serve as distinguishing means to be hereinafter explained, as shown in Fig. 7. The friction plate 47 stands at right angles to the cam leaf, of which it is an integral part, and is oppositely disposed thereto. It frictionally engages the inner side of the side wall 54 of the sections 43, so that the cam leaves will remain in any position to which they may be turned. Each cam leaf of each row, from front to rear, is indexed on its under face with a character that corresponds to the character of a type in the type basket and its corresponding finger key at the keyboard. Thus for every character key at the keyboard there is a longitudinal row of cam leaves on the jacquard, said leaves being also disposed in transverse rows. For example the character *e* shown in Fig. 7 is represented by the type *e* on a type bar in the basket K. Thus, any combination of characters may be selectively recorded on the jacquard at the will of the operator.

The carrier 40 and its cam leaves including the rolls 35 constitute a rotary device, and the cam leaves which actuate all the type actions when turned up may be termed traveling indexes or settable projections. Integral with the sides of the frame A, and extending rearwardly the full depth of the key board, are the racks 55. The pinions 56 mesh into these racks and are rigidly mounted on the shaft 57, said shaft passing through the horizontal slots 58 in the frame A. A thumb nut 59 is rigidly mounted at each end of the shaft 57, whereby the pinions can be turned to cause them to travel back and forth over the racks. The pinion shaft is rotatably mounted in the journals 60 in the base of the stand 61, said base being formed with a lip adapted to slide smoothly in the groove 62 in the frame A. Journaled in the top of the stands 61 and extending transversely across the key board, is the time regulating bar 63, which is hollow and rectangular in cross section. At each end it has a spindle 63^a, which rota-

tably fits in the journals 64 of the stands. One of the spindles carries rigidly at its outer end a crank arm 68 with the anti-friction roller 24 rotatably mounted in its outer end. A spring 66 attached to the arm and stand tends constantly to pull the roller end of said arm in a downward direction. The oscillating time bar 63, is pierced throughout its length by the slides or depressors 67, which are arranged in a row. The slides pierce the bar through its larger transverse dimension and stand nearly parallel to the crank arm 68. Each slide comprises a closed tube portion 65, having a flange 69 at its lower end and within the bar 63 to engage the spiral spring 70. The lower portion of the slide comprises a rectangular bar 71, having at its lower end a shoe with an offset thus forming the two planes 72 and 73. The upper portion of the bar 71 is round in cross section and fits slidably in the tube portion 65. The round shank has at its base an inverted cup shaped collar 75. The collar serves as an abutment for the spring 76, its downturned rim 77 limiting the downward movement of the bar 71. It will here be noted that the tube 65 is free to be further depressed after the lower edge of the rim 77 is seated upon the bottom of the bar 63.

Rotatably mounted on the pin 78, on the front face of the time bar 63 is the disk lever 79, said lever having pivotally mounted on its disk, by means of pins 80 and 81, the rods 82 and 83, respectively. The rods extend beyond the length of the bar 63, having suitable mounting (as at *f*) to steady their ends 84. A spring 83ª tends constantly to withdraw the ends. The ends are beveled and rest on similarly beveled lugs 85, said lugs being integral with the stands 61. The lugs are formed with two offset horizontal planes the offset forming the bevel portion 86 shown in Figs. 16 and 23.

Preferably integral with the bar 63 is the lug 87, which slidably supports in vertical position, the stem 88 which engages with its lower end the upper edge of the lever 79. A pin 90 fastened in the stem 88 slides in the vertical slot 91 in the bar 63 and in the inclined slot 92 in the plate 93. The pin passes through said slots into the interior of the bar 63 and is formed with a head 94, so as to hold the plate 93 slidably against the inner wall of the bar. The plate 93 is formed at its lower edge with a rearwardly extending flange 95, which slides longitudinally of the bar 63 when the stem 88 is moved in its support. The stem fits snugly in the lug 87, so that it will retain any position to which it may be moved. The slide 67ª has on the flange 69 of its tube portion 65, a pin 97, which passes through the vertical slot 98 in the front wall of the bar 63. The pin 97 engages the upper edge of the disk lever 79. Adjacent to the slide 67ª and passing through the front and rear wall of the bar 63, is the latch 99. A spring 100 retains it in its normal position as shown in Fig. 22.

Adjacent to the front jacquard carrier 35 and fastened in the frame A, are two rows of bent comb teeth, arranged one row above the other. The teeth 101 of the upper row extend rearwardly, their ends 102 being bent from below upward, and in an oblique direction to the left as shown in Figs. 12 and 13. These ends engage the forward edges of the cam leaves 48, and serve to turn them down, from up position, when the carrier 10 is caused to travel in forward direction by turning the nut 36. The teeth 103 of the lower row also extend rearwardly and are bent downwardly and from the rear forwardly, the downturned portion leading in an oblique direction to the left. These teeth also serve to turn down the upturned cam leaves on the carrier by engaging the rear edges of said leaves when the carrier is moved rearwardly as is shown in Figs. 1, 10 and 11. Thus the cam leaves, which may also be termed indicating actuators are returned from operative to inoperative positions by means of said combs, the leaves being operated when upturned to indicate which keys have been depressed and to actuate through the moving jacquard, mechanism to be hereinafter described. On the right hand side of, and on the frame A, is adjustably mounted a reflector *d*, having hinge connection 106 with the pivot plate 107, said plate swinging in a vertical plane about the set screw 108, whereby it can be adjusted and clamped firmly against the side of the frame. The reflector has a mirror 104 with a hinge 105 at its top. The hinge 105 is tight fitting so that the mirror when tilted will remain so. It can be tilted so that it will reflect the character on the cam leaves, as they are passing, on the jacquard through the opening *bbb* at the right of the machine between the key levers 2 and the edge A^3 of the frame. The reflector when not in use, can be folded against the side of the machine and thus close the sight opening *bbb* as shown in Fig. 2. The keyboard may have any number of keys and may be arranged to suit any style of machine, the drawings showing a tabulator key or bar 110, a spacing key or bar 4, some character keys 109, and a special key 9ª. Each key, excepting 9ª is mounted on a key lever 2, the tabulator and spacing bars being shown mounted on two key levers each. The key levers are arranged in pairs, (Fig. 24) one main lever 2 above, and a sub key lever R below, with the coöperating finger 6 between them. These levers and fingers aline with one of the slides 67 and with a row of cam leaves 48, so that when one of the

keys 109 is depressed, the lever 2 engages the slide 67 and pushes it down. The slide, by means of the planes 72 and 73 of its shoe, will engage and press down the friction plate 47 of one of the cam leaves, and thus turn it on its hinge 53, setting the leaf in upright position (Figs. 5, 6 and 7). Thus the key levers with their keys and the slides constitute key actuated devices for setting up type indexes or cams. Also the cams or indicating actuators, supported on the jacquard whereby they are bodily moved, constitute a portion of the actuating devices for all the type bars, since no type bar can be actuated to print without first becoming connected with the levers R through the actuation of the cams or actuators.

Upon inspection of Fig. 8 of the drawings, it will be seen that if the key lever 2 be depressed to the position shown in dotted lines, the top of the finger 6 will slide rearwardly on the cam face 5 until the notch 10 will have engaged the bar 9; a further depression of the key lever 2 will actuate the sub key lever R, and thereby the type bar J to print an impression of its type.

The finger 6 and the bar 9 constitute a cooperating means, or connecting means, between the key levers and the typewriting instrumentalities, said means being controlled by the cams 48, and the carrier 40 which in turn are actuated by the key levers.

To permit of the depression of the key levers 2 (Fig. 8) to the position indicated by the dotted lines, the bail 15, and the time bar 63 must be turned on their sides, as shown in Fig. 2, wherein the parts are shown in position to do direct writing, as in an ordinary typewriting machine.

It will be noted that the oscillating of the time bar 63 carries the depressors 67 with it and thus places them out of the path of the key levers 2. The turning of the bail 15 from the position shown in Fig. 1 to that shown in Fig. 2 affords a clearance between the levers 2 and the top of the bar 9. This clearance permits of sufficient downward movement of the levers 2 to cause the fingers 6 to engage the bar 9, thus constituting automatic engaging means.

From the above it will be seen that when the slide 67 in Fig. 24 is in the position shown in dotted lines, the depression of the key 109 shown indexed with an I in the drawings, will actuate the type bar J and cause it to print an I or an impression of its type. This is direct writing.

For the purpose of delaying printing operation of any of the type bars until some time after its corresponding key in the keyboard had been depressed, the engagement of the bar 9 with the fingers 6 is delayed in the following manner:

Referring to Fig. 2, it will be seen that the pawl 26 is held out of the path of the toothed wheel 37, by the cam 18 which is shown engaging the dog 25, and thereby controlling the pawl as has been hereinbefore explained. The depression of the bar 9 will carry the dog and pawl with it, the flat side of the cam 18 sliding on the rear end of the plate 19. To set the mechanism of the delaying, or time element as it will hereinafter be referred to, it is necessary, only, to turn the thumb nuts 16 and 59. The turning to the right of the nut 16 on the left side of the machine will move the parts from the position shown in Fig. 2 to that shown in Fig. 1. The cam 18, when turned to the right, will release the dog 25 and pawl 26, so that they will be drawn toward each other by the spring 28. The pawl will now engage the toothed wheel 37, turning said wheel a partial revolution, or letter space with every return or upward stroke of the universal bar 9. On the downward stroke, the pawl 9 will ride over the teeth of the wheel. Thus the carrier 40, through the turning of the wheel 37 and therefore the shaft 33 and roll 35, will travel horizontally and rearwardly, in a step by step movement, the speed of its travel being controlled by the activity of the keys.

Any cam index leaves that may be turned up or project from the surface of the jacquard, will, in turning over the roll 35 (Fig. 8) act as cam teeth to actuate the fingers 6 and push them into engagement with the universal bar 9. The fingers 6 constitute jacquard actuated devices. The depression of bar 9 by the operator after such engagement will actuate the typewriting instrumentalities. The return stroke of the bar 9 will cause the pawl to turn the wheel 37 just sufficient to permit the clip 41 (Fig. 12) to engage the next succeeding flat side of the rolls 35, thus controlling with exactness, the step by step movement of the carrier and its relative position with the depressors 67. The turning of the nut 16, will cause the cam 18 to release the plate 19, which will move rearwardly and downwardly, by virtue of the spring 22, the slotted hole 20 and the screws 21. In its downward travel, it will carry the roller 24 with it, and thereby oscillate the time bar 63. The time bar will thus be turned to the position shown in Figs. 1 and 17, so that the depressors 67 will stand upright and aline with the key levers 2 and the cams. The bail 15 has eccentrically pivoted in its ends, the rod 3^b, which pivotally connects with the fulcrumed lever 3^a. When the bail is turned up by means of the nut 16, it also actuates the lever 3^a through the rod 3^b, thus moving rearwardly, the shaft 3 and therefore all the key levers 2 hung on it. This rearward movement of the key levers, when the time element is being set, causes the levers 2 at 5 to clear the tops of the fingers 6 as shown in Fig. 25, so that the de-

pression of any key lever to turn up a cam index leaf will also depress the universal bar 9, but not the finger 6 beneath and in alinement with it. Thus, the depression of any key or key lever will simultaneously set up one of its corresponding index cam leaves, and depress the universal bar 9, thereby actuating to print, any type bar, whose key lever R with its finger 6 had been previously brought into engagement with the bar 9. When the fingers 6 are disengaged from the bar 9, the key levers 2 are rendered independent, irrespective of their indexes. The return stroke of the bar 9 turns the carrier to travel as has hereinbefore been explained, thus releasing the finger 6 which will spring back against the pin 8, at the same time disengaging the cam leaves from the fingers 6. As the upper run of the jacquard travels rearwardly, the upturned leaves, as they turn over the front of the roll 35, from below upward, are wiped down to their normal position by the teeth 103 of the lower comb. It will be evident from the above, that the time at which printing operation occurs, after a key has been depressed, depends upon the location on the carrier of the point at which the leaves are turned up. The time of printing operation is therefore, controlled by the shifting of the time bar 63. If for example a leaf be turned up at a point near the front roll, it will have to travel the entire distance to the finger 6, before it can engage the typewriting instrumentalities to effect a printing operation. In Fig. 2 this distance is shown to be about thirty letter spaces, or more than half of an ordinary line. Thus, in writing thirty characters, the depression of the thirtieth key will begin to print on the paper, the first of the thirty letters. It will be evident from the above, that twenty nine keys had been depressed without writing anything on the paper. If the operator desired to change these twenty nine letters on an ordinary typewriting machine, by erasing, much time would be consumed and the work would present a soiled appearance.

In my invention, the operator, desiring to change the twenty-nine letters, proceeds as follows: With one hand the finger piece 29 is pressed rearwardly, thus disengaging the pawl 26 from the wheel 37, and with the other hand the thumb nut 36 is turned to the left or in the direction to cause the top run of the jacquard to travel toward the front. The upturned cam leaves, representing the twenty-nine letters will be wiped down, as they engage and pass the teeth 101 of the upper comb. By looking in the mirror 104 the operator can, at all times, see legibly reflected, what he expects to write, affording opportunity to detect errors or make changes. This capability of retrieving depressions of keys, without printed results, is especially useful in taking dictation on the machine, wherein it is very desirable to avoid X-ing out of written matter. To change the period of delay of printing operation, the operator turns the thumb nut 59, which will cause the pinion 56, through the shaft 57, to travel in the racks 55. The pinions will carry with them, the stands 61 and therefore the time regulating bar 63. Thus, the delay may be set for a single letter space or a plurality of letter spaces. The carrier with its leaves and the time bar constitute, therefore, a time element, whereby the type bars of a typewriting machine can be controlled to perform their functions at predetermined times. Likewise, the bar 9 and the fingers 6, constitute a general coupling point, where the key levers are coupled with their corresponding or any of the other type bars, and toward which the carrier travels greater or lesser distances to consume time and thereby delay type action.

The carrier, with its indexed leaves on which the characters are represented backward, so that they will be legible in the reflector *d*, constitute, with the reflector, a displaying device or a work indicator. The bar 9 and the fingers at the rear of the keyboard, constitute a coöperating means between the typewriting instrumentalities and the keys; they also constitute a means for interchanging the operative connections between said instrumentalities and keys. The thumb nut 16 and the chain of mechanism connected therewith, which serves to move the ball 15 and the bar 63, as well as the levers 2, constitute a means for rendering inoperative or operative the delaying devices, or a means for restoring direct operative connection between the keys and their type.

It will be evident that whatever number of letter spaces the delaying devices are set to, the work in hand will be lacking that number of characters on the paper to render it complete, when the last character of the work in hand has had its key depressed. The lacking characters still have their corresponding cam leaves upturned on the carrier. To print these lacking characters to complete the work without turning up any more cam leaves the operator repeatedly depresses the key 9^a on the universal bar 9, until every one of the remaining upturned leaves have passed the coupling point, or, in other words, caused an imprint to be made. It will be noted that the cam leaves are indexed with the lower case letters. To distinguish capitals from small letters on the indicating device, mechanism is provided to tilt the leaves as shown in Figs. 6 and 7, wherein the underside of the lug 52 in Fig. 7 has the appearance of an oblong dash. The oblong dash indicates to the operator that the shift key 2^d or shift lock key 2^e had been depressed for that letter, and that it stands for

a capital. The turning of the leaves past the vertical by the depression of either the shift or shift lock key is accomplished as follows: The slides or depressors 67[b] and 67[a] aline with the key levers 2, carrying the "shift lock" and "shift key" keys respectively. When the shift lock key is depressed, the stem 88 (Fig. 16) projecting above 67[b] is first depressed, and moves, by means of pin 90 and slots 92 and 91, the plate 93 toward the slide 67[a]. The flange 95 of said plate, will underlie the rim 77 of the slide 67[a], so that the rim will seat itself on the flange. The stem, under pressure, continues downwardly turning the disk lever 79 on its pivot 78, until it passes the spring pressed latch 99 and is locked in down position, as shown in Fig. 15. The tube 65 of the slide 67[b], under key pressure, depresses the spring 70 which in turn presses downwardly the bar 71 and its spring 76. The shoe with its planes 72 and 73 at the end of the bar 71 will turn up one of the cam leaves. The turning of the disk lever 79 extends the rods 82 and 83 lengthwise, causing their beveled ends 84 to ride on the bevel surface 86, and thus tilt the bar 63 as shown in Fig. 18. This oscillation of the bar 63 with the slides, moves the plane 72 over the friction plate 47 of the cams. The plane 72, being lower than the plane 73, will depress the cam leaves to a greater degree, as is plainly shown in Figs. 5 and 6, and thus tilt it past the vertical, or, in other words, move it through more than ninety degrees. This further tilting of the leaves, renders the underside of the lug 52, visible and appears like a black rectangle to the eye, thus constituting a distinguishing means, to discern one character from the other. It will be noted that when the time bar 63 is locked in tilted position, all the depressors, in its entire length, present their planes 72 to the cam leaves and thus all keys except the shift key that are depressed after the shift lock key has been depressed, will tilt the cam leaves to the greater degree to indicate capitals. To unlock the shift lock key and to restore the slides or depressors to upright position, the shift key is depressed, as is the case in the regular L. C. Smith & Bros. typewriting machine. This is done as follows: The flange 69 of the slide 67[a], in its downward travel, will engage the beveled portion 99[a] of the latch 99 (Fig. 22) and press it rearwardly against the tension of its spring 100, thereby causing the latch to be withdrawn from the front face of the bar 63 and thereby release the lever 79, which is then restored by its spring 83[a]. The restoration of the lever 79, causes the rods 82 and 83 to withdraw their ends, thereby causing the bar 63, under the pull of the spring 66 to again assume its vertical or normal position.

It should be remembered that the flange 95, of the plate 93, underlies the rim 77 of the slide 67[a], when said slide is depressed. The thickness of the flange 95 is equivalent to the offset between the planes 72 and 73. Thus, by the interposition of the flange 95, the plane 72 on the rod 67[a] is neutralized. This occurs only when the "shift key" is depressed, while the "shift lock" key is locked. The stem 88 is restored by the lever 79 in its upward movement, thereby moving the plate 93 from under the rim 77. When the shift key is used in the usual way, or, in other words, to shift the type basket for one imprint, its pin 97 in its downward movement will engage and turn the lever 79 on its pivot and thereby tilt the time bar momentarily, the bar assuming its normal position when the shift key is released from pressure. Thus, when the "shift key" is depressed to unlock the "shift lock" key, the cam leaves, which the shift key turned up when it was depressed, will stand as shown in Fig. 5; but when it has been depressed for other purposes than the unlocking of the "shift lock" key, the cam leaf it turns up will stand as shown in Fig. 6. Thus the leaves will indicate in the reflector whether the shift key had been depressed for the purpose of unlocking or for the purpose of shifting the basket to print. This shift lock and shift key mechanism constitutes a secondary type shifting and shift locking mechanism. In use the operator, desiring to delay printing operation, proceeds to turn the thumb nut 16 until the bail 15 is in vertical position. He then sets the time element by turning the thumb nut 59, and proceeds to write, manipulating the keys as on any ordinary writing machine. When he wishes to write direct, he simply turns the thumb nut 16 and each type bar will respond to the depression of its key.

It is obvious that the details of the device may be variously modified without departing from the principles of the invention, the scope of which is defined in the claims.

I claim as my invention:

1. In a typewriting machine, the combination with typewriting instrumentalities and keyed actuating levers therefor, of a pivoted universal bar between said instrumentalities and said levers, mechanism to change the relations of said levers to said instrumentalities, said mechanism having operative connection with said bar and levers, and means for rendering said mechanism operative or inoperative.

2. In a typewriting machine, the combination with typewriting instrumentalities and keyed actuating levers therefor, of a pivoted universal bar operatively connected to said instrumentalities and levers and means operatively connected with said bar to render said levers inoperative to actuate

said instrumentalities for a predetermined length of time.

3. In a writing in sight typewriting machine the combination with key operated writing mechanism, of indicating means to preliminarily indicate the writing, said means being operatively connected with said mechanism, and means for rendering said indicated writing visible to the operator.

4. In a typewriting machine the combination with key operated typewriting mechanism including breakable connections, of a general coupling point in said mechanism including a pivoted universal bar operatively connected with said mechanism, movable connecting members to engage said bar and traveling cams to actuate said members when said mechanism is actuated.

5. In a typewriting machine the combination of typebars, a plurality of levers operatively connected to said typebars so that the pressure applied on said levers by the operator will move said typebars, and a normally open connection in said levers adapted to be moved to join said levers by the initial portion of a continuous pressure applied to said levers the subsequent portion of said pressure being utilized to directly move said type bars when said levers are joined.

6. In a typewriting machine the combination of typebars, actuating levers for said typebars a universal bar coöperatively interposed between said levers, and means for selectively connecting any typebar and any actuating lever to said universal bar.

7. In a typewriting machine the combination of a plurality of rows of keys at the key board, a pivoted typebar for each of said keys, a system of levers connecting said keys and said typebars whereby the pressure applied on said keys directly actuates said typebars and means coöperatively connected with said system of levers and actuated thereby, whereby the operator may selectively actuate to print any type bar by depressing any one of the keys of the plurality of rows of keys.

8. In a typewriting machine the combination of a series of pivoted typebars, a series of key levers paired with said typebars and adapted to receive pressure for the purpose of moving said type bar, connecting mechanism between the typebars and key levers, and means for actuating said mechanism to render said key levers common to any one of said type bars.

9. In a typewriting machine the combination of typebars, key actuated mechanism detachably connected with said typebars for the purpose of transmitting applied power from said mechanism to said typebars, and coupling devices operatively connected with said typebars and actuated by said mechanism, whereby the typebars may be singly and selectively connected to said mechanism.

10. In a typewriting machine, the combination with typewriting mechanism normally in a state of rest and mounted in the main body of the machine, depressible actuating levers connected with said mechanism and extending forward of the main body of the machine, and a device coöperating with said actuating levers and adapted to render them inoperative to move said typewriting mechanism for a predetermined length of time.

11. In a typewriting machine, the combination of typebars, keys, actuating mechanism operatively connecting said bars and keys, said mechanism being adapted to transmit the power applied to said keys at the keyboard to said typebars and means whereby the successive depression of one or more of said keys will first position and then actuate said mechanism to move said typebars by the power applied to the keys.

12. In a typewriting machine in combination typewriting instrumentalities, keys marked with legible characters operatively connected with said instrumentalities, a traveling jacquard between said instrumentalities and said keys, settable actuators on said jacquard said actuators being marked with legible characters to correspond to those on said keys, and means for rendering the characters of said actuators visible to the operator.

13. In a typewriting machine, the combination with typewriting mechanism normally in a state of rest, actuating keys at the keyboard, for the purpose of moving said typewriting mechanism, and a delaying device coöperating with said actuating keys to delay typebar action for one or a plurality of letter spaces.

14. In a typewriting machine the combination with key operated printing mechanism of means for delaying for a predetermined length of time the printing, said means being operatively connected with said mechanism, and means operatively connected with the first named means for legibly indicating during the delay the matter which will be printed.

15. In a typewriting machine, the combination with typewriting instrumentalities, of coupling mechanism operatively connected therewith, key actuated devices connected with said mechanism and cams to engage said mechanism to cause the coupling of said devices with said instrumentalities so that the pressure applied to said key actuated devices will directly actuate said type writing instrumentalities.

16. In a typewriting machine, the combination with printing instrumentalities, a

series of key actuated depressing devices, traveling cams under said devices and adapted to be engaged thereby, and mechanism in the path of said cams and operatively connected with said printing instrumentalities to actuate them to print when said key actuated devices are depressed, said mechanism being adapted to transmit the pressure applied to said devices to said printing instrumentalities.

17. In a typewriting machine, the combination of typewriting mechanism, a settable delaying device, and a single power applying source operatively connected with said mechanism and said device.

18. In a typewriting machine the combination with manually driven typewriting instrumentalities, of a series of depressors, a time element and a step by step movement producing means operatively connected with said element and said depressors, the parts being arranged so that the manual power applied to said depressors will actuate said typewriting instrumentalities.

19. In a typewriting machine, the combination manually driven typewriting instrumentalities and keyed actuating levers therefor, of movable connections between said instrumentalities and said levers, means for closing said connections to cause the power applied by the operator to said levers to be communicated to said instrumentalities so that they will perform a printing operation when any of said levers are actuated through a single stroke, and means for delaying the closing of said connections until some subsequent stroke of said lever or levers.

20. In a typewriting machine, the combination with a series of type bars, of means actuated by the keys at the key board for operating said type bars, said means comprising normally open connections and a cam conveyer adapted to engage said connections in its travel and close them to effect a printing operation.

21. In a typewriting machine, the combination of typebars, keys, settable mechanism between said typebars and said keys, and means operatively connected with said mechanism and said keys for the purpose of setting said mechanism and actuating said typebars by a single depression of one of said keys.

22. In a typewriting machine the combination with key actuated typewriting instrumentalities of a traveling jacquard operatively connected with said instrumentalities and having settable legible characters, and means for reflecting in legible succession said characters.

23. In a typewriting machine, the combination with manually driven typebars including keys, of means for rendering said mechanism inoperative to actuate a type bar during the first depression of one or more of said keys and means actuated to be set by said first depression to render said mechanism operative to effect typebar action by any subsequent depression of one or more of said keys.

24. In a typewriting machine, the combination with a jacquard belt, of a plurality of settable character bearing indicating actuators carried by said jacquard belt and normally unset; means for selectively setting in succession said indicating actuators and means for reflecting said actuators in the order that they were selectively set.

25. In a typewriting machine, the combination with typewriting mechanism including keys, a movable jacquard operatively connected with said mechanism and keys, indicating actuators on said jacquard adapted to contact with said keys and means for changing the relative position of the point of contact between said actuators and said keys.

26. In a typewriting machine, the combination with key actuated typewriting instrumentalities including writing delaying devices, keys for directly actuating said typewriting instrumentalities and a key independent of said delaying devices and connected with said instrumentalities and delaying devices for the purpose of printing the delayed writing.

27. In a typewriting machine, the combination with typewriting instrumentalities including keys, and writing delaying mechanism, of shift keys for the purpose of shifting the type from lower to upper cases, indicators on said delaying mechanism and adapted to be moved a predetermined amount by said shift keys, and means for rendering said indicators visible.

28. In a typewriting machine, the combination with typewriting instrumentalities, of writing delaying devices, keys operatively connected with said instrumentalities and devices, and means for rendering the keys independent of said delaying devices.

29. In a typewriting machine, the combination with typewriting instrumentalities including main key levers, of sub key levers, a universal bar between said main and sub key levers and means on said universal bar for the purpose of rendering the main key levers inoperative to move said sub levers.

30. In a typewriting machine, the combination with typewriting instrumentalities, of key actuated writing delaying devices, and means whereby said writing delaying devices may be rendered inoperative to delay the writing.

31. In a typewriting machine, the combi-

nation with typewriting and tabulating mechanism, of keys, and tabulating delaying devices operatively connected with said keys and said tabulating mechanism.

32. In a typewriting machine, in combination, a main frame, key-actuated typewriting means in said main frame, said means including a platen having a visible printing point so that the writing as it progresses is visible to the operator, and means operatively connected with said key-actuated typewriting instrumentalities for the purpose of legibly displaying what has been written, at a point other than the said visible printing point.

33. In a typewriting machine, the combination with key-actuated typewriting instrumentalities, of mechanism responsive to the depression of the keys for legibly arranging, in rows, character bearing devices.

34. In a typewriting machine, the combination with key-actuated typewriting instrumentalities, of mechanism operable through the keys and having character bearing members capable of being set up in rows, and means for unsetting said character bearing members.

35. In a typewriting machine, the combination with key-actuated typewriting instrumentalities, of mechanism carrying character bearing devices, that are normally not in upright position, and means controlled by the keys for moving them into upright position.

36. In a typewriting machine, the combination with key-actuated typewriting instrumentalities, of mechanism comprising members having characters on their faces, said members being normally not in upright position and means controlled by the keys for setting said members upright and pointing their faces in one direction.

37. In a typewriting machine, the combination with key-actuated typewriting instrumentalities provided with means for actuating adjacent mechanism, of movable character bearing devices controlled by said actuating means and means in operative alinement with said character bearing devices, for the purpose of rendering them visible to the operator.

38. In a typewriting machine, the combination with typewriting instrumentalities comprising key actuated type bars and provided with means for actuating adjacent mechanism, of movable devices controlled by the keys, said devices bearing the characters corresponding to the type on the typebars, and means coöperating with said devices for the purpose of rendering said characters visible to the operator.

39. In a typewriting machine, the combination with typewriting instrumentalities including type bars; keys at the key board and mechanism operatively connected with said keys and said type bars through which the type bars are lifted to the printing point by pressure applied on the keys; of letter spacing mechanism; a spacing key at the key board, and means operatively connected with said spacing key for delaying letter spacing operation.

40. In a typewriting machine, the combination with typewriting instrumentalities including type bars; and key operated mechanism for lifting said type bars to the printing point; of letter spacing mechanism; a key for said letter spacing mechanism; and means for rendering said letter spacing mechanism irresponsive to its key for a predetermined interval of time.

41. In a typewriting machine, the combination with key-actuated typewriting and tabulating mechanism including a tabulator key, of tabulator operation controlling means, controlled by the tabulator key and capable of being set to delay tabulator action at the will of the operator.

42. In a typewriting machine, the combination with key-actuated typewriting and tabulating mechanism including a tabulator key, of means actuated by said tabulator key, for temporarily rendering the tabulator mechanism irresponsive to said key's depression.

43. In a typewriting machine, the combination with key-actuated typewriting and tabulating mechanism including a tabulator key, of a controlled time element between said tabulator key and the tabulator mechanism, whereby time is consumed between the time of key action and tabulator action.

44. In a typewriting machine, the combination with typewriting mechanism and a carriage; of a key for releasing the carriage, and means operatively connected with said key for causing an interval of time to elapse after complete key-action and before carriage travel.

45. In a typewriting machine, the combination with typewriting instrumentalities, a carriage and escapement devices; of a carriage releasing key, and a controlled time element whereby said key remains inoperative to release the carriage for an interval of time relatively to key action.

46. In a typewriting machine, the combination with typewriting instrumentalities including pivoted type bars; of keys for moving the type bars to the printing point; and a time element also actuated by said keys, whereby the time of printing operation is controlled relatively to the depression of the keys.

47. In a typewriting machine, the combination of a series of type bars mounted for

case shifting movement, actuating mechanism for said type bars, means for effecting a case shifting movement of the type bars in an up and down direction and means operatively connected with said first named means for simultaneously effecting a bodily movement of certain parts of said actuating mechanism, instrumental in the actuation of all the type actions in a different direction from that in which the type bars are moved.

In testimony whereof I affix my signature in presence of two witnesses.

GEORGE VOELKER.

Witnesses:

CHARLES G. PFEIFFER,

H. SMITH.