(12) INTERNATIONAL APPLICATION PUBLISHED UNDER THE PATENT COOPERATION TREATY (PCT)

(19) World Intellectual Property Organization
International Bureau

(43) International Publication Date
26 October 2023 (26.10.2023)

WIPO | PCT

(10) International Publication Number
WO 2023/201680 A1

(51) International Patent Classification:
H04W 56/00 (2009.01)

(21) International Application Number:
PCT/CN2022/088383

(22) International Filing Date:
22 April 2022 (22.04.2022)

(25) Filing Language: English

(26) Publication Language: English

(71) Applicant: **APPLE INC.** [US/US]; One Apple Park Way, Cupertino, California 95014 (US).

(71) Applicant *(for MG only)*: **LI, Qiming** [CN/CN]; 25F, International Finance Centre, 8 Jianguomenwai Avenue, Chaoyang District, Beijing 100022 (CN).

(72) Inventors: **CUI, Jie**; One Apple Park Way, Cupertino, California 95014 (US). **LI, Qiming**; 25F, International Finance Centre, 8 Jianguomenwai Avenue, Chaoyang District, Beijing 100022 (CN). **SUN, Haitong**; One Apple Park Way, Cupertino, California 95014 (US). **TANG, Yang**; One Apple Park Way, Cupertino, California 95014 (US). **CHEN, Xiang**; One Apple Park Way, Cupertino, California 95014 (US). **RAGHAVAN, Manasa**; One Apple Park Way, Cupertino, California 95014 (US). **ZHANG, Dawei**; One Apple Park Way, Cupertino, California 95014 (US). **HE, Hong**; One Apple Park Way, Cupertino, California 95014 (US). **YE, Chunxuan**; One Apple Park Way, Cupertino, California 95014 (US).

(74) Agent: **CCPIT PATENT AND TRADEMARK LAW OFFICE**; 10/F, Ocean Plaza, 158 Fuxingmennei Street, Beijing 100031 (CN).

(81) Designated States *(unless otherwise indicated, for every kind of national protection available)*: AE, AG, AL, AM, AO, AT, AU, AZ, BA, BB, BG, BH, BN, BR, BW, BY, BZ, CA, CH, CL, CN, CO, CR, CU, CZ, DE, DJ, DK, DM, DO, DZ, EC, EE, EG, ES, FI, GB, GD, GE, GH, GM, GT, HN, HR, HU, ID, IL, IN, IR, IS, IT, JM, JO, JP, KE, KG, KH, KN, KP, KR, KW, KZ, LA, LC, LK, LR, LS, LU, LY, MA, MD, ME, MG, MK, MN, MW, MX, MY, MZ, NA, NG, NI, NO, NZ, OM, PA, PE, PG, PH, PL, PT, QA, RO, RS, RU, RW, SA, SC, SD, SE, SG, SK, SL, ST, SV, SY, TH, TJ, TM, TN, TR, TT, TZ, UA, UG, US, UZ, VC, VN, WS, ZA, ZM, ZW.

(84) Designated States *(unless otherwise indicated, for every kind of regional protection available)*: ARIPO (BW, GH, GM, KE, LR, LS, MW, MZ, NA, RW, SC, SD, SL, ST, SZ, TZ, UG, ZM, ZW), Eurasian (AM, AZ, BY, KG, KZ, RU, TJ, TM), European (AL, AT, BE, BG, CH, CY, CZ, DE, DK, EE, ES, FI, FR, GB, GR, HR, HU, IE, IS, IT, LT, LU, LV, MC, MK, MT, NL, NO, PL, PT, RO, RS, SE, SI, SK,

(54) Title: SYSTEM INFORMATION READING MECHANISM ENHANCEMENT

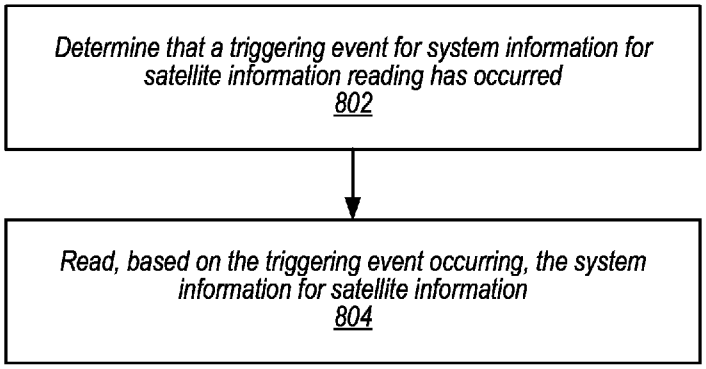

FIG. 8

(57) Abstract: Apparatuses, systems, and methods for enhanced system information reading in NTNs, including systems, methods, and mechanisms to determining timing and/or occasion for a UE to read system information as well as determining scheduling restrictions when system information reading collides with other UE behaviors, e.g., such as receiving data and/or control channels from a serving cell, uplink transmissions, and/or radio resource management (RRM) measurements.

WO 2023/201680 A1

[Continued on next page]

SM, TR), OAPI (BF, BJ, CF, CG, CI, CM, GA, GN, GQ, GW, KM, ML, MR, NE, SN, TD, TG).

Published:

— *with international search report (Art. 21(3))*

System Information Reading Mechanism Enhancement

FIELD

[0001] The invention relates to wireless communications, and more particularly to apparatuses, systems, and methods for enhanced system information reading in non-terrestrial networks (NTNs), including systems, methods, and mechanisms to determining timing and/or occasion for a UE to read system information as well as determining scheduling restrictions when system information reading collides with other UE behaviors, e.g., such as receiving data and/or control channels from a serving cell, uplink transmissions, and/or radio resource management (RRM) measurements, e.g., in 5G NR systems and beyond.

DESCRIPTION OF THE RELATED ART

[0002] Wireless communication systems are rapidly growing in usage. In recent years, wireless devices such as smart phones and tablet computers have become increasingly sophisticated. In addition to supporting telephone calls, many mobile devices now provide access to the internet, email, text messaging, and navigation using the global positioning system (GPS), and are capable of operating sophisticated applications that utilize these functionalities.

[0003] Long Term Evolution (LTE) is currently the technology of choice for the majority of wireless network operators worldwide, providing mobile broadband data and high-speed Internet access to their subscriber base. LTE was first proposed in 2004 and was first standardized in 2008. Since then, as usage of wireless communication systems has expanded exponentially, demand has risen for wireless network operators to support a higher capacity for a higher density of mobile broadband users. Thus, in 2015 study of a new radio access technology began and, in 2017, a first release of Fifth Generation New Radio (5G NR) was standardized.

[0004] 5G-NR, also simply referred to as NR, provides, as compared to LTE, a higher capacity for a higher density of mobile broadband users, while also supporting device-to-device, ultra-reliable, and massive machine type communications with lower latency and/or lower battery consumption. Further, NR may allow for more flexible UE scheduling as compared to current LTE. Consequently, efforts are being made in ongoing developments of 5G-NR to take advantage of higher throughputs possible at higher frequencies.

SUMMARY

[0005] Embodiments relate to wireless communications, and more particularly to apparatuses, systems, and methods for enhanced system information reading in NTNs, including systems, methods, and mechanisms to determining timing and/or occasion for a UE to read system information as well as determining scheduling restrictions when system information reading collides with other UE behaviors, e.g., such as receiving data and/or control channels from a serving cell, uplink transmissions, and/or radio resource management (RRM) measurements, e.g., in 5G NR systems and beyond.

[0006] For example, in some embodiments, a user equipment device (UE) may be configured to determine that a triggering event for system information for satellite information reading has occurred. The triggering event for system information for satellite information reading may include at least one of a network behavior, a UE behavior, a channel condition, a timing condition, a distance condition, or a network indication. The UE may be configured to read, based on the triggering event occurring, the system information for satellite information. The system information for satellite information reading may include at least ephemeris information.

[0007] As another example, a UE may be configured to determine that a system information for satellite information reading occasion collides with receiving a data channel or control channel from a serving cell. The UE may be configured to prioritize the system information for satellite information reading occasion over receiving the data channel. The UE may be configured to drop reception of the data channel.

[0008] As an additional example, a UE may be configured to determine that a system information for satellite information reading occasion collides with uplink transmission. The UE may be configured to prioritize the system information for satellite information reading occasion over the uplink transmission. The UE be configured to may skip the uplink transmission.

[0009] As a further example, a UE may be configured to determine that a system information for satellite information reading occasion collides with uplink transmission. The UE may be configured to prioritize the uplink transmission over the system information for satellite information reading occasion. The UE may be configured to skip the system information for satellite information reading occasion.

[0010] As a yet further example, a UE may be configured to determine that a system information for satellite information reading occasion collides with uplink transmission. The UE may be configured to prioritize, based on determining that the uplink transmission is an

aperiodic uplink transmission, the uplink transmission over the system information for satellite information reading occasion. The UE may be configured to skip the system information for satellite information reading occasion.

[0011] As yet another example, a UE may be configured to determine that a system information for satellite information reading occasion collides with a measurement occasion. The measurement occasion may be one of a layer 1 (L1) measurement occasion or a layer 3 (L3) measurement occasion. The UE may be configured to prioritize the system information for satellite information reading occasion over the measurement occasion. The UE may be configured to skip the measurement occasion.

[0012] As an additional example, a UE may be configured to determine that a system information for satellite information reading occasion collides with a measurement occasion. The measurement occasion may be one of an L1 measurement occasion or an L3 measurement occasion. The UE may be configured to prioritize the measurement occasion over the system information for satellite information reading occasion. The UE be configured to may skip the system information for satellite information reading occasion.

[0013] As another example, a UE may be configured to determine that a system information for satellite information reading occasion collides with a measurement occasion. The measurement occasion may be one of an L1measurement occasion or an L3 measurement occasion. The UE may be configured to prioritize, based on determining that the measurement occasion is an L3 measurement occasion, the system information for satellite information reading occasion over the measurement occasion. The UE may be configured to skip the measurement occasion.

[0014] In an additional example, a UE may be configured to determine that a system information for satellite information reading occasion collides with a measurement occasion. The measurement occasion may be one of an L1 measurement occasion or an L3 measurement occasion. The UE may be configured to prioritize, based on determining that the measurement occasion is an aperiodic measurement occasion, the measurement occasion over the system information for satellite information reading occasion. The UE may be configured to skip the system information for satellite information reading occasion.

[0015] The techniques described herein may be implemented in and/or used with a number of different types of devices, including but not limited to unmanned aerial vehicles (UAVs), unmanned aerial controllers (UACs), a UTM server, base stations, access points, cellular

phones, tablet computers, wearable computing devices, portable media players, and any of various other computing devices.

[0016] This Summary is intended to provide a brief overview of some of the subject matter described in this document. Accordingly, it will be appreciated that the above-described features are merely examples and should not be construed to narrow the scope or spirit of the subject matter described herein in any way. Other features, aspects, and advantages of the subject matter described herein will become apparent from the following Detailed Description, Figures, and Claims.

BRIEF DESCRIPTION OF THE DRAWINGS

[0017] A better understanding of the present subject matter can be obtained when the following detailed description of various embodiments is considered in conjunction with the following drawings, in which:

[0018] Figure 1A illustrates an example wireless communication system according to some embodiments.

[0019] Figure 1B illustrates an example of a base station and an access point in communication with a user equipment (UE) device, according to some embodiments.

[0020] Figure 2 illustrates an example block diagram of a base station, according to some embodiments.

[0021] Figure 3 illustrates an example block diagram of a server according to some embodiments.

[0022] Figure 4 illustrates an example block diagram of a UE according to some embodiments.

[0023] Figure 5 illustrates an example block diagram of cellular communication circuitry, according to some embodiments.

[0024] Figure 6A illustrates an example of a 5G network architecture that incorporates both 3GPP (e.g., cellular) and non-3GPP (e.g., non-cellular) access to the 5G CN, according to some embodiments.

[0025] Figure 6B illustrates an example of a 5G network architecture that incorporates both dual 3GPP (e.g., LTE and 5G NR) access and non-3GPP access to the 5G CN, according to some embodiments.

[0026] Figure 7 illustrates an example of a baseband processor architecture for a UE, according to some embodiments.

[0027] Figure 8 illustrates a block diagram of an example of a method for receiving satellite information from a non-terrestrial network (NTN), according to some embodiments.

[0028] Figure 9 illustrates a block diagram of an example of a method for mitigating a collision between receiving satellite information from a non-terrestrial network (NTN) and receiving a data channel or control channel, according to some embodiments.

[0029] Figure 10 illustrates a block diagram of an example of a method for mitigating a collision between receiving satellite information from a non-terrestrial network (NTN) and an uplink transmission, according to some embodiments.

[0030] Figure 11 illustrates a block diagram of an example of another method for mitigating a collision between receiving satellite information from a non-terrestrial network (NTN) and an uplink transmission, according to some embodiments.

[0031] Figure 12 illustrates a block diagram of an example of yet another method for mitigating a collision between receiving satellite information from a non-terrestrial network (NTN) and an uplink transmission, according to some embodiments.

[0032] Figure 13 illustrates a block diagram of an example of a method for mitigating a collision between receiving satellite information from a non-terrestrial network (NTN) and a measurement occasion, according to some embodiments.

[0033] Figure 14 illustrates a block diagram of an example of another method for mitigating a collision between receiving satellite information from a non-terrestrial network (NTN) and a measurement occasion, according to some embodiments.

[0034] Figure 15 illustrates a block diagram of an example of yet another method for mitigating a collision between receiving satellite information from a non-terrestrial network (NTN) and a measurement occasion, according to some embodiments.

[0035] Figure 16 illustrates a block diagram of an example of yet a further method for mitigating a collision between receiving satellite information from a non-terrestrial network (NTN) and a measurement occasion, according to some embodiments.

[0036] While the features described herein may be susceptible to various modifications and alternative forms, specific embodiments thereof are shown by way of example in the drawings and are herein described in detail. It should be understood, however, that the drawings and detailed description thereto are not intended to be limiting to the particular form disclosed, but on the contrary, the intention is to cover all modifications, equivalents and alternatives falling within the spirit and scope of the subject matter as defined by the appended claims.

DETAILED DESCRIPTION

Acronyms

[0037] Various acronyms are used throughout the present disclosure. Definitions of the most prominently used acronyms that may appear throughout the present disclosure are provided below:

- **3GPP**: Third Generation Partnership Project
- **UE**: User Equipment
- **RF**: Radio Frequency
- **DL**: Downlink
- **UL**: Uplink
- **LTE**: Long Term Evolution
- **NR**: New Radio
- **5GS**: 5G System
- **5GMM**: 5GS Mobility Management
- **5GC/5GCN**: 5G Core Network
- **IE**: Information Element
- **CE**: Control Element
- **MAC**: Medium Access Control
- **SSB**: Synchronization Signal Block
- **CSI**: Channel State Information
- **CSI-RS**: Channel State Information Reference Signal
- **CMR**: Channel Measurement Resource
- **PDCCH**: Physical Downlink Control Channel
- **PDSCH**: Physical Downlink Shared Channel
- **RRC**: Radio Resource Control
- **RRM**: Radio Resource Management
- **CORESET**: Control Resource Set
- **TCI**: Transmission Configuration Indicator
- **DCI**: Downlink Control Indicator

Terms

[0038] The following is a glossary of terms used in this disclosure:

[0039] Memory Medium – Any of various types of non-transitory memory devices or storage devices. The term "memory medium" is intended to include an installation medium, e.g., a CD-ROM, floppy disks, or tape device; a computer system memory or random-access memory such as DRAM, DDR RAM, SRAM, EDO RAM, Rambus RAM, etc.; a non-volatile memory such as a Flash, magnetic media, e.g., a hard drive, or optical storage; registers, or other similar types of memory elements, etc. The memory medium may include other types of non-transitory memory as well or combinations thereof. In addition, the memory medium may be located in a first computer system in which the programs are executed, or may be located in a second different computer system which connects to the first computer system over a network, such as the Internet. In the latter instance, the second computer system may provide program instructions to the first computer for execution. The term "memory medium" may include two or more memory mediums which may reside in different locations, e.g., in different computer systems that are connected over a network. The memory medium may store program instructions (e.g., embodied as computer programs) that may be executed by one or more processors.

[0040] Carrier Medium – a memory medium as described above, as well as a physical transmission medium, such as a bus, network, and/or other physical transmission medium that conveys signals such as electrical, electromagnetic, or digital signals.

[0041] Programmable Hardware Element - includes various hardware devices comprising multiple programmable function blocks connected via a programmable interconnect. Examples include FPGAs (Field Programmable Gate Arrays), PLDs (Programmable Logic Devices), FPOAs (Field Programmable Object Arrays), and CPLDs (Complex PLDs). The programmable function blocks may range from fine grained (combinatorial logic or look up tables) to coarse grained (arithmetic logic units or processor cores). A programmable hardware element may also be referred to as "reconfigurable logic".

[0042] Computer System (or Computer) – any of various types of computing or processing systems, including a personal computer system (PC), mainframe computer system, workstation, network appliance, Internet appliance, personal digital assistant (PDA), television system, grid computing system, or other device or combinations of devices. In general, the term "computer system" can be broadly defined to encompass any device (or combination of devices) having at least one processor that executes instructions from a memory medium.

[0043] User Equipment (UE) (or "UE Device") – any of various types of computer systems devices which are mobile or portable and which performs wireless communications. Examples of UE devices include mobile telephones or smart phones (e.g., iPhone™, Android™-based

phones), portable gaming devices (e.g., Nintendo DS™, PlayStation Portable™, Gameboy Advance™, iPhone™), laptops, wearable devices (e.g., smart watch, smart glasses), PDAs, portable Internet devices, music players, data storage devices, other handheld devices, unmanned aerial vehicles (UAVs) (e.g., drones), UAV controllers (UACs), and so forth. In general, the term "UE" or "UE device" can be broadly defined to encompass any electronic, computing, and/or telecommunications device (or combination of devices) which is easily transported by a user and capable of wireless communication.

[0044] Base Station – The term "Base Station" has the full breadth of its ordinary meaning, and at least includes a wireless communication station installed at a fixed location and used to communicate as part of a wireless telephone system or radio system.

[0045] Processing Element (or Processor) – refers to various elements or combinations of elements that are capable of performing a function in a device, such as a user equipment or a cellular network device. Processing elements may include, for example: processors and associated memory, portions or circuits of individual processor cores, entire processor cores, processor arrays, circuits such as an ASIC (Application Specific Integrated Circuit), programmable hardware elements such as a field programmable gate array (FPGA), as well any of various combinations of the above.

[0046] Channel - a medium used to convey information from a sender (transmitter) to a receiver. It should be noted that since characteristics of the term "channel" may differ according to different wireless protocols, the term "channel" as used herein may be considered as being used in a manner that is consistent with the standard of the type of device with reference to which the term is used. In some standards, channel widths may be variable (e.g., depending on device capability, band conditions, etc.). For example, LTE may support scalable channel bandwidths from 1.4 MHz to 20MHz. In contrast, WLAN channels may be 22MHz wide while Bluetooth channels may be 1Mhz wide. Other protocols and standards may include different definitions of channels. Furthermore, some standards may define and use multiple types of channels, e.g., different channels for uplink or downlink and/or different channels for different uses such as data, control information, etc.

[0047] Band - The term "band" has the full breadth of its ordinary meaning, and at least includes a section of spectrum (e.g., radio frequency spectrum) in which channels are used or set aside for the same purpose.

[0048] Wi-Fi – The term "Wi-Fi" (or WiFi) has the full breadth of its ordinary meaning, and at least includes a wireless communication network or RAT that is serviced by wireless LAN (WLAN) access points and which provides connectivity through these access points to the

Internet. Most modern Wi-Fi networks (or WLAN networks) are based on IEEE 802.11 standards and are marketed under the name “Wi-Fi”. A Wi-Fi (WLAN) network is different from a cellular network.

[0049] 3GPP Access – refers to accesses (e.g., radio access technologies) that are specified by 3GPP standards. These accesses include, but are not limited to, GSM/GPRS, LTE, LTE-A, and/or 5G NR. In general, 3GPP access refers to various types of cellular access technologies.

[0050] Non-3GPP Access – refers any accesses (e.g., radio access technologies) that are not specified by 3GPP standards. These accesses include, but are not limited to, WiMAX, CDMA2000, Wi-Fi, WLAN, and/or fixed networks. Non-3GPP accesses may be split into two categories, "trusted" and "untrusted": Trusted non-3GPP accesses can interact directly with an evolved packet core (EPC) and/or a 5G core (5GC) whereas untrusted non-3GPP accesses interwork with the EPC/5GC via a network entity, such as an Evolved Packet Data Gateway and/or a 5G NR gateway. In general, non-3GPP access refers to various types on non-cellular access technologies.

[0051] Automatically – refers to an action or operation performed by a computer system (e.g., software executed by the computer system) or device (e.g., circuitry, programmable hardware elements, ASICs, etc.), without user input directly specifying or performing the action or operation. Thus, the term "automatically" is in contrast to an operation being manually performed or specified by the user, where the user provides input to directly perform the operation. An automatic procedure may be initiated by input provided by the user, but the subsequent actions that are performed “automatically” are not specified by the user, i.e., are not performed “manually”, where the user specifies each action to perform. For example, a user filling out an electronic form by selecting each field and providing input specifying information (e.g., by typing information, selecting check boxes, radio selections, etc.) is filling out the form manually, even though the computer system must update the form in response to the user actions. The form may be automatically filled out by the computer system where the computer system (e.g., software executing on the computer system) analyzes the fields of the form and fills in the form without any user input specifying the answers to the fields. As indicated above, the user may invoke the automatic filling of the form, but is not involved in the actual filling of the form (e.g., the user is not manually specifying answers to fields but rather they are being automatically completed). The present specification provides various examples of operations being automatically performed in response to actions the user has taken.

[0052] Approximately - refers to a value that is almost correct or exact. For example, approximately may refer to a value that is within 1 to 10 percent of the exact (or desired) value.

It should be noted, however, that the actual threshold value (or tolerance) may be application dependent. For example, in some embodiments, "approximately" may mean within 0.1% of some specified or desired value, while in various other embodiments, the threshold may be, for example, 2%, 3%, 5%, and so forth, as desired or as required by the particular application.

[0053] Concurrent – refers to parallel execution or performance, where tasks, processes, or programs are performed in an at least partially overlapping manner. For example, concurrency may be implemented using "strong" or strict parallelism, where tasks are performed (at least partially) in parallel on respective computational elements, or using "weak parallelism", where the tasks are performed in an interleaved manner, e.g., by time multiplexing of execution threads.

[0054] Various components may be described as "configured to" perform a task or tasks. In such contexts, "configured to" is a broad recitation generally meaning "having structure that" performs the task or tasks during operation. As such, the component can be configured to perform the task even when the component is not currently performing that task (e.g., a set of electrical conductors may be configured to electrically connect a module to another module, even when the two modules are not connected). In some contexts, "configured to" may be a broad recitation of structure generally meaning "having circuitry that" performs the task or tasks during operation. As such, the component can be configured to perform the task even when the component is not currently on. In general, the circuitry that forms the structure corresponding to "configured to" may include hardware circuits.

[0055] Various components may be described as performing a task or tasks, for convenience in the description. Such descriptions should be interpreted as including the phrase "configured to." Reciting a component that is configured to perform one or more tasks is expressly intended not to invoke 35 U.S.C. § 112(f) interpretation for that component.

Figures 1A and 1B: Communication Systems

[0056] Figure 1A illustrates a simplified example wireless communication system, according to some embodiments. It is noted that the system of Figure 1A is merely one example of a possible system, and that features of this disclosure may be implemented in any of various systems, as desired.

[0057] As shown, the example wireless communication system includes a base station 102A which communicates over a transmission medium with one or more user devices 106A, 106B,

etc., through 106N. Each of the user devices may be referred to herein as a "user equipment" (UE). Thus, the user devices 106 are referred to as UEs or UE devices.

[0058] The base station (BS) 102A may be a base transceiver station (BTS) or cell site (a "cellular base station") and may include hardware that enables wireless communication with the UEs 106A through 106N.

[0059] The communication area (or coverage area) of the base station may be referred to as a "cell." The base station 102A and the UEs 106 may be configured to communicate over the transmission medium using any of various radio access technologies (RATs), also referred to as wireless communication technologies, or telecommunication standards, such as GSM, UMTS (associated with, for example, WCDMA or TD-SCDMA air interfaces), LTE, LTE-Advanced (LTE-A), 5G new radio (5G NR), HSPA, 3GPP2 CDMA2000 (e.g., 1xRTT, 1xEV-DO, HRPD, eHRPD), etc. Note that if the base station 102A is implemented in the context of LTE, it may alternately be referred to as an 'eNodeB' or 'eNB'. Note that if the base station 102A is implemented in the context of 5G NR, it may alternately be referred to as 'gNodeB' or 'gNB'.

[0060] As shown, the base station 102A may also be equipped to communicate with a network 100 (e.g., a core network of a cellular service provider, a telecommunication network such as a public switched telephone network (PSTN), and/or the Internet, among various possibilities). Thus, the base station 102A may facilitate communication between the user devices and/or between the user devices and the network 100. In particular, the cellular base station 102A may provide UEs 106 with various telecommunication capabilities, such as voice, SMS and/or data services.

[0061] Base station 102A and other similar base stations (such as base stations 102B...102N) operating according to the same or a different cellular communication standard may thus be provided as a network of cells, which may provide continuous or nearly continuous overlapping service to UEs 106A-N and similar devices over a geographic area via one or more cellular communication standards.

[0062] Thus, while base station 102A may act as a "serving cell" for UEs 106A-N as illustrated in Figure 1, each UE 106 may also be capable of receiving signals from (and possibly within communication range of) one or more other cells (which might be provided by base stations 102B-N and/or any other base stations), which may be referred to as "neighboring cells". Such cells may also be capable of facilitating communication between user devices and/or between user devices and the network 100. Such cells may include "macro" cells, "micro" cells, "pico" cells, and/or cells which provide any of various other granularities of service area size. For

example, base stations 102A-B illustrated in Figure 1 might be macro cells, while base station 102N might be a micro cell. Other configurations are also possible.

[0063] In some embodiments, base station 102A may be a next generation base station, e.g., a 5G New Radio (5G NR) base station, or "gNB". In some embodiments, a gNB may be connected to a legacy evolved packet core (EPC) network and/or to a NR core (NRC) network. In addition, a gNB cell may include one or more transition and reception points (TRPs). In addition, a UE capable of operating according to 5G NR may be connected to one or more TRPs within one or more gNBs.

[0064] Note that a UE 106 may be capable of communicating using multiple wireless communication standards. For example, the UE 106 may be configured to communicate using a wireless networking (e.g., Wi-Fi) and/or peer-to-peer wireless communication protocol (e.g., Bluetooth, Wi-Fi peer-to-peer, etc.) in addition to at least one cellular communication protocol (e.g., GSM, UMTS (associated with, for example, WCDMA or TD-SCDMA air interfaces), LTE, LTE-A, 5G NR, HSPA, 3GPP2 CDMA2000 (e.g., 1xRTT, 1xEV-DO, HRPD, eHRPD), etc.). The UE 106 may also or alternatively be configured to communicate using one or more global navigational satellite systems (GNSS, e.g., GPS or GLONASS), one or more mobile television broadcasting standards (e.g., ATSC-M/H or DVB-H), and/or any other wireless communication protocol, if desired. Other combinations of wireless communication standards (including more than two wireless communication standards) are also possible.

[0065] Figure 1B illustrates user equipment 106 (e.g., one of the devices 106A through 106N) in communication with a base station 102 and an access point 112, according to some embodiments. The UE 106 may be a device with both cellular communication capability and non-cellular communication capability (e.g., Bluetooth, Wi-Fi, and so forth) such as a mobile phone, a hand-held device, a computer or a tablet, or virtually any type of wireless device.

[0066] The UE 106 may include a processor that is configured to execute program instructions stored in memory. The UE 106 may perform any of the method embodiments described herein by executing such stored instructions. Alternatively, or in addition, the UE 106 may include a programmable hardware element such as an FPGA (field-programmable gate array) that is configured to perform any of the method embodiments described herein, or any portion of any of the method embodiments described herein.

[0067] The UE 106 may include one or more antennas for communicating using one or more wireless communication protocols or technologies. In some embodiments, the UE 106 may be configured to communicate using, for example, CDMA2000 (1xRTT / 1xEV-DO / HRPD /

eHRPD), LTE/LTE-Advanced, or 5G NR using a single shared radio and/or GSM, LTE, LTE-Advanced, or 5G NR using the single shared radio. The shared radio may couple to a single antenna, or may couple to multiple antennas (e.g., for MIMO) for performing wireless communications. In general, a radio may include any combination of a baseband processor, analog RF signal processing circuitry (e.g., including filters, mixers, oscillators, amplifiers, etc.), or digital processing circuitry (e.g., for digital modulation as well as other digital processing). Similarly, the radio may implement one or more receive and transmit chains using the aforementioned hardware. For example, the UE 106 may share one or more parts of a receive and/or transmit chain between multiple wireless communication technologies, such as those discussed above.

[0068] In some embodiments, the UE 106 may include separate transmit and/or receive chains (e.g., including separate antennas and other radio components) for each wireless communication protocol with which it is configured to communicate. As a further possibility, the UE 106 may include one or more radios which are shared between multiple wireless communication protocols, and one or more radios which are used exclusively by a single wireless communication protocol. For example, the UE 106 might include a shared radio for communicating using either of LTE or 5G NR (or LTE or 1xRTTor LTE or GSM), and separate radios for communicating using each of Wi-Fi and Bluetooth. Other configurations are also possible.

Figure 2: Block Diagram of a Base Station

[0069] Figure 2 illustrates an example block diagram of a base station 102, according to some embodiments. It is noted that the base station of Figure 3 is merely one example of a possible base station. As shown, the base station 102 may include processor(s) 204 which may execute program instructions for the base station 102. The processor(s) 204 may also be coupled to memory management unit (MMU) 240, which may be configured to receive addresses from the processor(s) 204 and translate those addresses to locations in memory (e.g., memory 260 and read only memory (ROM) 250) or to other circuits or devices.

[0070] The base station 102 may include at least one network port 270. The network port 270 may be configured to couple to a telephone network and provide a plurality of devices, such as UE devices 106, access to the telephone network as described above in Figures 1 and 2.

[0071] The network port 270 (or an additional network port) may also or alternatively be configured to couple to a cellular network, e.g., a core network of a cellular service provider. The core network may provide mobility related services and/or other services to a plurality of

devices, such as UE devices 106. In some cases, the network port 270 may couple to a telephone network via the core network, and/or the core network may provide a telephone network (e.g., among other UE devices serviced by the cellular service provider).

[0072] In some embodiments, base station 102 may be a next generation base station, e.g., a 5G New Radio (5G NR) base station, or "gNB". In such embodiments, base station 102 may be connected to a legacy evolved packet core (EPC) network and/or to a NR core (NRC) network. In addition, base station 102 may be considered a 5G NR cell and may include one or more transition and reception points (TRPs). In addition, a UE capable of operating according to 5G NR may be connected to one or more TRPs within one or more gNBs.

[0073] The base station 102 may include at least one antenna 234, and possibly multiple antennas. The at least one antenna 234 may be configured to operate as a wireless transceiver and may be further configured to communicate with UE devices 106 via radio 230. The antenna 234 communicates with the radio 230 via communication chain 232. Communication chain 232 may be a receive chain, a transmit chain or both. The radio 230 may be configured to communicate via various wireless communication standards, including, but not limited to, 5G NR, LTE, LTE-A, GSM, UMTS, CDMA2000, Wi-Fi, etc.

[0074] The base station 102 may be configured to communicate wirelessly using multiple wireless communication standards. In some instances, the base station 102 may include multiple radios, which may enable the base station 102 to communicate according to multiple wireless communication technologies. For example, as one possibility, the base station 102 may include an LTE radio for performing communication according to LTE as well as a 5G NR radio for performing communication according to 5G NR. In such a case, the base station 102 may be capable of operating as both an LTE base station and a 5G NR base station. As another possibility, the base station 102 may include a multi-mode radio which is capable of performing communications according to any of multiple wireless communication technologies (e.g., 5G NR and Wi-Fi, LTE and Wi-Fi, LTE and UMTS, LTE and CDMA2000, UMTS and GSM, etc.).

[0075] As described further subsequently herein, the BS 102 may include hardware and software components for implementing or supporting implementation of features described herein. The processor 204 of the base station 102 may be configured to implement or support implementation of part or all of the methods described herein, e.g., by executing program instructions stored on a memory medium (e.g., a non-transitory computer-readable memory medium). Alternatively, the processor 204 may be configured as a programmable hardware element, such as an FPGA (Field Programmable Gate Array), or as an ASIC (Application

Specific Integrated Circuit), or a combination thereof. Alternatively (or in addition) the processor 204 of the BS 102, in conjunction with one or more of the other components 230, 232, 234, 240, 250, 260, 270 may be configured to implement or support implementation of part or all of the features described herein.

[0076] In addition, as described herein, processor(s) 204 may be comprised of one or more processing elements. In other words, one or more processing elements may be included in processor(s) 204. Thus, processor(s) 204 may include one or more integrated circuits (ICs) that are configured to perform the functions of processor(s) 204. In addition, each integrated circuit may include circuitry (e.g., first circuitry, second circuitry, etc.) configured to perform the functions of processor(s) 204.

[0077] Further, as described herein, radio 230 may be comprised of one or more processing elements. In other words, one or more processing elements may be included in radio 230. Thus, radio 230 may include one or more integrated circuits (ICs) that are configured to perform the functions of radio 230. In addition, each integrated circuit may include circuitry (e.g., first circuitry, second circuitry, etc.) configured to perform the functions of radio 230.

Figure 3: Block Diagram of a Server

[0078] Figure 3 illustrates an example block diagram of a server 104, according to some embodiments. It is noted that the server of Figure 3 is merely one example of a possible server. As shown, the server 104 may include processor(s) 344 which may execute program instructions for the server 104. The processor(s) 344 may also be coupled to memory management unit (MMU) 374, which may be configured to receive addresses from the processor(s) 344 and translate those addresses to locations in memory (e.g., memory 364 and read only memory (ROM) 354) or to other circuits or devices.

[0079] The server 104 may be configured to provide a plurality of devices, such as base station 102, UE devices 106, and/or UTM 108, access to network functions, e.g., as further described herein.

[0080] In some embodiments, the server 104 may be part of a radio access network, such as a 5G New Radio (5G NR) radio access network. In some embodiments, the server 104 may be connected to a legacy evolved packet core (EPC) network and/or to a NR core (NRC) network.

[0081] As described further subsequently herein, the server 104 may include hardware and software components for implementing or supporting implementation of features described herein. The processor 344 of the server 104 may be configured to implement or support implementation of part or all of the methods described herein, e.g., by executing program

instructions stored on a memory medium (e.g., a non-transitory computer-readable memory medium). Alternatively, the processor 344 may be configured as a programmable hardware element, such as an FPGA (Field Programmable Gate Array), or as an ASIC (Application Specific Integrated Circuit), or a combination thereof. Alternatively (or in addition) the processor 344 of the server 104, in conjunction with one or more of the other components 354, 364, and/or 374 may be configured to implement or support implementation of part or all of the features described herein.

[0082] In addition, as described herein, processor(s) 344 may be comprised of one or more processing elements. In other words, one or more processing elements may be included in processor(s) 344. Thus, processor(s) 344 may include one or more integrated circuits (ICs) that are configured to perform the functions of processor(s) 344. In addition, each integrated circuit may include circuitry (e.g., first circuitry, second circuitry, etc.) configured to perform the functions of processor(s) 344.

Figure 4: Block Diagram of a UE

[0083] Figure 4 illustrates an example simplified block diagram of a communication device 106, according to some embodiments. It is noted that the block diagram of the communication device of Figure 4 is only one example of a possible communication device. According to embodiments, communication device 106 may be a user equipment (UE) device, a mobile device or mobile station, a wireless device or wireless station, a desktop computer or computing device, a mobile computing device (e.g., a laptop, notebook, or portable computing device), a tablet, an unmanned aerial vehicle (UAV), a UAV controller (UAC) and/or a combination of devices, among other devices. As shown, the communication device 106 may include a set of components 400 configured to perform core functions. For example, this set of components may be implemented as a system on chip (SOC), which may include portions for various purposes. Alternatively, this set of components 400 may be implemented as separate components or groups of components for the various purposes. The set of components 400 may be coupled (e.g., communicatively; directly or indirectly) to various other circuits of the communication device 106.

[0084] For example, the communication device 106 may include various types of memory (e.g., including NAND flash 410), an input/output interface such as connector I/F 420 (e.g., for connecting to a computer system; dock; charging station; input devices, such as a microphone, camera, keyboard; output devices, such as speakers; etc.), the display 460, which may be integrated with or external to the communication device 106, and cellular communication

circuitry 430 such as for 5G NR, LTE, GSM, etc., and short to medium range wireless communication circuitry 429 (e.g., Bluetooth™ and WLAN circuitry). In some embodiments, communication device 106 may include wired communication circuitry (not shown), such as a network interface card, e.g., for Ethernet.

[0085] The cellular communication circuitry 430 may couple (e.g., communicatively; directly or indirectly) to one or more antennas, such as antennas 435 and 436 as shown. The short to medium range wireless communication circuitry 429 may also couple (e.g., communicatively; directly or indirectly) to one or more antennas, such as antennas 437 and 438 as shown. Alternatively, the short to medium range wireless communication circuitry 429 may couple (e.g., communicatively; directly or indirectly) to the antennas 435 and 436 in addition to, or instead of, coupling (e.g., communicatively; directly or indirectly) to the antennas 437 and 438. The short to medium range wireless communication circuitry 429 and/or cellular communication circuitry 430 may include multiple receive chains and/or multiple transmit chains for receiving and/or transmitting multiple spatial streams, such as in a multiple-input multiple output (MIMO) configuration.

[0086] In some embodiments, as further described below, cellular communication circuitry 430 may include dedicated receive chains (including and/or coupled to, e.g., communicatively; directly or indirectly. dedicated processors and/or radios) for multiple RATs (e.g., a first receive chain for LTE and a second receive chain for 5G NR). In addition, in some embodiments, cellular communication circuitry 430 may include a single transmit chain that may be switched between radios dedicated to specific RATs. For example, a first radio may be dedicated to a first RAT, e.g., LTE, and may be in communication with a dedicated receive chain and a transmit chain shared with an additional radio, e.g., a second radio that may be dedicated to a second RAT, e.g., 5G NR, and may be in communication with a dedicated receive chain and the shared transmit chain.

[0087] The communication device 106 may also include and/or be configured for use with one or more user interface elements. The user interface elements may include any of various elements, such as display 460 (which may be a touchscreen display), a keyboard (which may be a discrete keyboard or may be implemented as part of a touchscreen display), a mouse, a microphone and/or speakers, one or more cameras, one or more buttons, and/or any of various other elements capable of providing information to a user and/or receiving or interpreting user input.

[0088] The communication device 106 may further include one or more smart cards 445 that include SIM (Subscriber Identity Module) functionality, such as one or more UICC(s)

(Universal Integrated Circuit Card(s)) cards 445. Note that the term "SIM" or "SIM entity" is intended to include any of various types of SIM implementations or SIM functionality, such as the one or more UICC(s) cards 445, one or more eUICCs, one or more eSIMs, either removable or embedded, etc. In some embodiments, the UE 106 may include at least two SIMs. Each SIM may execute one or more SIM applications and/or otherwise implement SIM functionality. Thus, each SIM may be a single smart card that may be embedded, e.g., may be soldered onto a circuit board in the UE 106, or each SIM 410 may be implemented as a removable smart card. Thus, the SIM(s) may be one or more removable smart cards (such as UICC cards, which are sometimes referred to as "SIM cards"), and/or the SIMs 410 may be one or more embedded cards (such as embedded UICCs (eUICCs), which are sometimes referred to as "eSIMs" or "eSIM cards"). In some embodiments (such as when the SIM(s) include an eUICC), one or more of the SIM(s) may implement embedded SIM (eSIM) functionality; in such an embodiment, a single one of the SIM(s) may execute multiple SIM applications. Each of the SIMs may include components such as a processor and/or a memory; instructions for performing SIM/eSIM functionality may be stored in the memory and executed by the processor. In some embodiments, the UE 106 may include a combination of removable smart cards and fixed/non-removable smart cards (such as one or more eUICC cards that implement eSIM functionality), as desired. For example, the UE 106 may comprise two embedded SIMs, two removable SIMs, or a combination of one embedded SIMs and one removable SIMs. Various other SIM configurations are also contemplated.

[0089] As noted above, in some embodiments, the UE 106 may include two or more SIMs. The inclusion of two or more SIMs in the UE 106 may allow the UE 106 to support two different telephone numbers and may allow the UE 106 to communicate on corresponding two or more respective networks. For example, a first SIM may support a first RAT such as LTE, and a second SIM 410 support a second RAT such as 5G NR. Other implementations and RATs are of course possible. In some embodiments, when the UE 106 comprises two SIMs, the UE 106 may support Dual SIM Dual Active (DSDA) functionality. The DSDA functionality may allow the UE 106 to be simultaneously connected to two networks (and use two different RATs) at the same time, or to simultaneously maintain two connections supported by two different SIMs using the same or different RATs on the same or different networks. The DSDA functionality may also allow the UE 106 to simultaneously receive voice calls or data traffic on either phone number. In certain embodiments the voice call may be a packet switched communication. In other words, the voice call may be received using voice over LTE (VoLTE) technology and/or voice over NR (VoNR) technology. In some embodiments, the UE 106 may

support Dual SIM Dual Standby (DSDS) functionality. The DSDS functionality may allow either of the two SIMs in the UE 106 to be on standby waiting for a voice call and/or data connection. In DSDS, when a call/data is established on one SIM, the other SIM is no longer active. In some embodiments, DSDx functionality (either DSDA or DSDS functionality) may be implemented with a single SIM (e.g., a eUICC) that executes multiple SIM applications for different carriers and/or RATs.

[0090] As shown, the SOC 400 may include processor(s) 402, which may execute program instructions for the communication device 106 and display circuitry 404, which may perform graphics processing and provide display signals to the display 460. The processor(s) 402 may also be coupled to memory management unit (MMU) 440, which may be configured to receive addresses from the processor(s) 402 and translate those addresses to locations in memory (e.g., memory 406, read only memory (ROM) 450, NAND flash memory 410) and/or to other circuits or devices, such as the display circuitry 404, short to medium range wireless communication circuitry 429, cellular communication circuitry 430, connector I/F 420, and/or display 460. The MMU 440 may be configured to perform memory protection and page table translation or set up. In some embodiments, the MMU 440 may be included as a portion of the processor(s) 402.

[0091] As noted above, the communication device 106 may be configured to communicate using wireless and/or wired communication circuitry. The communication device 106 may be configured to perform methods for enhanced system information reading in NTNs, including systems, methods, and mechanisms to determining timing and/or occasion for a UE to read system information as well as determining scheduling restrictions when system information reading collides with other UE behaviors, e.g., such as receiving data and/or control channels from a serving cell, uplink transmissions, and/or radio resource management (RRM) measurements, e.g., in 5G NR systems and beyond, as further described herein.

[0092] As described herein, the communication device 106 may include hardware and software components for implementing the above features for a communication device 106 to communicate a scheduling profile for power savings to a network. The processor 402 of the communication device 106 may be configured to implement part or all of the features described herein, e.g., by executing program instructions stored on a memory medium (e.g., a non-transitory computer-readable memory medium). Alternatively (or in addition), processor 402 may be configured as a programmable hardware element, such as an FPGA (Field Programmable Gate Array), or as an ASIC (Application Specific Integrated Circuit). Alternatively (or in addition) the processor 402 of the communication device 106, in

conjunction with one or more of the other components 400, 404, 406, 410, 420, 429, 430, 440, 445, 450, 460 may be configured to implement part or all of the features described herein.

[0093] In addition, as described herein, processor 402 may include one or more processing elements. Thus, processor 402 may include one or more integrated circuits (ICs) that are configured to perform the functions of processor 402. In addition, each integrated circuit may include circuitry (e.g., first circuitry, second circuitry, etc.) configured to perform the functions of processor(s) 402.

[0094] Further, as described herein, cellular communication circuitry 430 and short to medium range wireless communication circuitry 429 may each include one or more processing elements. In other words, one or more processing elements may be included in cellular communication circuitry 430 and, similarly, one or more processing elements may be included in short to medium range wireless communication circuitry 429. Thus, cellular communication circuitry 430 may include one or more integrated circuits (ICs) that are configured to perform the functions of cellular communication circuitry 430. In addition, each integrated circuit may include circuitry (e.g., first circuitry, second circuitry, etc.) configured to perform the functions of cellular communication circuitry 430. Similarly, the short to medium range wireless communication circuitry 429 may include one or more ICs that are configured to perform the functions of short to medium range wireless communication circuitry 429. In addition, each integrated circuit may include circuitry (e.g., first circuitry, second circuitry, etc.) configured to perform the functions of short to medium range wireless communication circuitry 429.

Figure 5: Block Diagram of Cellular Communication Circuitry

[0095] Figure 5 illustrates an example simplified block diagram of cellular communication circuitry, according to some embodiments. It is noted that the block diagram of the cellular communication circuitry of Figure 5 is only one example of a possible cellular communication circuit. According to embodiments, cellular communication circuitry 530, which may be cellular communication circuitry 430, may be included in a communication device, such as communication device 106 described above. As noted above, communication device 106 may be a user equipment (UE) device, a mobile device or mobile station, a wireless device or wireless station, a desktop computer or computing device, a mobile computing device (e.g., a laptop, notebook, or portable computing device), a tablet and/or a combination of devices, among other devices.

[0096] The cellular communication circuitry 530 may couple (e.g., communicatively; directly or indirectly) to one or more antennas, such as antennas 435a-b and 436 as shown (in Figure

4). In some embodiments, cellular communication circuitry 530 may include dedicated receive chains (including and/or coupled to, e.g., communicatively; directly or indirectly. dedicated processors and/or radios) for multiple RATs (e.g., a first receive chain for LTE and a second receive chain for 5G NR). For example, as shown in Figure 5, cellular communication circuitry 530 may include a modem 510 and a modem 520. Modem 510 may be configured for communications according to a first RAT, e.g., such as LTE or LTE-A, and modem 520 may be configured for communications according to a second RAT, e.g., such as 5G NR.

[0097] As shown, modem 510 may include one or more processors 512 and a memory 516 in communication with processors 512. Modem 510 may be in communication with a radio frequency (RF) front end 530. RF front end 530 may include circuitry for transmitting and receiving radio signals. For example, RF front end 530 may include receive circuitry (RX) 532 and transmit circuitry (TX) 534. In some embodiments, receive circuitry 532 may be in communication with downlink (DL) front end 550, which may include circuitry for receiving radio signals via antenna 335a.

[0098] Similarly, modem 520 may include one or more processors 522 and a memory 526 in communication with processors 522. Modem 520 may be in communication with an RF front end 540. RF front end 540 may include circuitry for transmitting and receiving radio signals. For example, RF front end 540 may include receive circuitry 542 and transmit circuitry 544. In some embodiments, receive circuitry 542 may be in communication with DL front end 560, which may include circuitry for receiving radio signals via antenna 335b.

[0099] In some embodiments, a switch 570 may couple transmit circuitry 534 to uplink (UL) front end 572. In addition, switch 570 may couple transmit circuitry 544 to UL front end 572. UL front end 572 may include circuitry for transmitting radio signals via antenna 336. Thus, when cellular communication circuitry 530 receives instructions to transmit according to the first RAT (e.g., as supported via modem 510), switch 570 may be switched to a first state that allows modem 510 to transmit signals according to the first RAT (e.g., via a transmit chain that includes transmit circuitry 534 and UL front end 572). Similarly, when cellular communication circuitry 530 receives instructions to transmit according to the second RAT (e.g., as supported via modem 520), switch 570 may be switched to a second state that allows modem 520 to transmit signals according to the second RAT (e.g., via a transmit chain that includes transmit circuitry 544 and UL front end 572).

[0100] In some embodiments, the cellular communication circuitry 530 may be configured to perform methods for enhanced system information reading in NTNs, including systems, methods, and mechanisms to determining timing and/or occasion for a UE to read system

information as well as determining scheduling restrictions when system information reading collides with other UE behaviors, e.g., such as receiving data and/or control channels from a serving cell, uplink transmissions, and/or radio resource management (RRM) measurements, e.g., in 5G NR systems and beyond, as further described herein.

[0101] As described herein, the modem 510 may include hardware and software components for implementing the above features or for time division multiplexing UL data for NSA NR operations, as well as the various other techniques described herein. The processors 512 may be configured to implement part or all of the features described herein, e.g., by executing program instructions stored on a memory medium (e.g., a non-transitory computer-readable memory medium). Alternatively (or in addition), processor 512 may be configured as a programmable hardware element, such as an FPGA (Field Programmable Gate Array), or as an ASIC (Application Specific Integrated Circuit). Alternatively (or in addition) the processor 512, in conjunction with one or more of the other components 530, 532, 534, 550, 570, 572, 335 and 336 may be configured to implement part or all of the features described herein.

[0102] In addition, as described herein, processors 512 may include one or more processing elements. Thus, processors 512 may include one or more integrated circuits (ICs) that are configured to perform the functions of processors 512. In addition, each integrated circuit may include circuitry (e.g., first circuitry, second circuitry, etc.) configured to perform the functions of processors 512.

[0103] As described herein, the modem 520 may include hardware and software components for implementing the above features for enhanced system information reading in NTNs, including systems, methods, and mechanisms to determining timing and/or occasion for a UE to read system information as well as determining scheduling restrictions when system information reading collides with other UE behaviors, e.g., such as receiving data and/or control channels from a serving cell, uplink transmissions, and/or radio resource management (RRM) measurements, e.g., in 5G NR systems and beyond, as well as the various other techniques described herein. The processors 522 may be configured to implement part or all of the features described herein, e.g., by executing program instructions stored on a memory medium (e.g., a non-transitory computer-readable memory medium). Alternatively (or in addition), processor 522 may be configured as a programmable hardware element, such as an FPGA (Field Programmable Gate Array), or as an ASIC (Application Specific Integrated Circuit). Alternatively (or in addition) the processor 522, in conjunction with one or more of the other components 540, 542, 544, 550, 570, 572, 335 and 336 may be configured to implement part or all of the features described herein.

[0104] In addition, as described herein, processors 522 may include one or more processing elements. Thus, processors 522 may include one or more integrated circuits (ICs) that are configured to perform the functions of processors 522. In addition, each integrated circuit may include circuitry (e.g., first circuitry, second circuitry, etc.) configured to perform the functions of processors 522.

Figures 6A, 6B and 7: 5G Core Network Architecture – Interworking with Wi-Fi

[0105] In some embodiments, the 5G core network (CN) may be accessed via (or through) a cellular connection/interface (e.g., via a 3GPP communication architecture/protocol) and a non-cellular connection/interface (e.g., a non-3GPP access architecture/protocol such as Wi-Fi connection). Figure 6A illustrates an example of a 5G network architecture that incorporates both 3GPP (e.g., cellular) and non-3GPP (e.g., non-cellular) access to the 5G CN, according to some embodiments. As shown, a user equipment device (e.g., such as UE 106) may access the 5G CN through both a radio access network (RAN, e.g., such as gNB 604, which may be a base station 102) and an access point, such as AP 612. The AP 612 may include a connection to the Internet 600 as well as a connection to a non-3GPP inter-working function (N3IWF) 603 network entity. The N3IWF may include a connection to a core access and mobility management function (AMF) 605 of the 5G CN. The AMF 605 may include an instance of a 5G mobility management (5G MM) function associated with the UE 106. In addition, the RAN (e.g., gNB 604) may also have a connection to the AMF 605. Thus, the 5G CN may support unified authentication over both connections as well as allow simultaneous registration for UE 106 access via both gNB 604 and AP 612. As shown, the AMF 605 may include one or more functional entities associated with the 5G CN (e.g., network slice selection function (NSSF) 620, short message service function (SMSF) 622, application function (AF) 624, unified data management (UDM) 626, policy control function (PCF) 628, and/or authentication server function (AUSF) 630). Note that these functional entities may also be supported by a session management function (SMF) 606a and an SMF 606b of the 5G CN. The AMF 605 may be connected to (or in communication with) the SMF 606a. Further, the gNB 604 may in communication with (or connected to) a user plane function (UPF) 608a that may also be communication with the SMF 606a. Similarly, the N3IWF 603 may be communicating with a UPF 608b that may also be communicating with the SMF 606b. Both UPFs may be communicating with the data network (e.g., DN 610a and 610b) and/or the Internet 600 and Internet Protocol (IP) Multimedia Subsystem/IP Multimedia Core Network Subsystem (IMS) core network 610.

[0106] Figure 6B illustrates an example of a 5G network architecture that incorporates both dual 3GPP (e.g., LTE and 5G NR) access and non-3GPP access to the 5G CN, according to some embodiments. As shown, a user equipment device (e.g., such as UE 106) may access the 5G CN through both a radio access network (RAN, e.g., such as gNB 604 or eNB 602, which may be a base station 102) and an access point, such as AP 612. The AP 612 may include a connection to the Internet 600 as well as a connection to the N3IWF 603 network entity. The N3IWF may include a connection to the AMF 605 of the 5G CN. The AMF 605 may include an instance of the 5G MM function associated with the UE 106. In addition, the RAN (e.g., gNB 604) may also have a connection to the AMF 605. Thus, the 5G CN may support unified authentication over both connections as well as allow simultaneous registration for UE 106 access via both gNB 604 and AP 612. In addition, the 5G CN may support dual-registration of the UE on both a legacy network (e.g., LTE via eNB 602) and a 5G network (e.g., via gNB 604). As shown, the eNB 602 may have connections to a mobility management entity (MME) 642 and a serving gateway (SGW) 644. The MME 642 may have connections to both the SGW 644 and the AMF 605. In addition, the SGW 644 may have connections to both the SMF 606a and the UPF 608a. As shown, the AMF 605 may include one or more functional entities associated with the 5G CN (e.g., NSSF 620, SMSF 622, AF 624, UDM 626, PCF 628, and/or AUSF 630). Note that UDM 626 may also include a home subscriber server (HSS) function and the PCF may also include a policy and charging rules function (PCRF). Note further that these functional entities may also be supported by the SMF606a and the SMF 606b of the 5G CN. The AMF 606 may be connected to (or in communication with) the SMF 606a. Further, the gNB 604 may in communication with (or connected to) the UPF 608a that may also be communication with the SMF 606a. Similarly, the N3IWF 603 may be communicating with a UPF 608b that may also be communicating with the SMF 606b. Both UPFs may be communicating with the data network (e.g., DN 610a and 610b) and/or the Internet 600 and IMS core network 610.

[0107] Note that in various embodiments, one or more of the above-described network entities may be configured to perform methods for enhanced system information reading in NTNs, including systems, methods, and mechanisms to determining timing and/or occasion for a UE to read system information as well as determining scheduling restrictions when system information reading collides with other UE behaviors, e.g., such as receiving data and/or control channels from a serving cell, uplink transmissions, and/or radio resource management (RRM) measurements, e.g., in 5G NR systems and beyond, e.g., as further described herein.

[0108] Figure 7 illustrates an example of a baseband processor architecture for a UE (e.g., such as UE 106), according to some embodiments. The baseband processor architecture 700 described in Figure 7 may be implemented on one or more radios (e.g., radios 429 and/or 430 described above) or modems (e.g., modems 510 and/or 520) as described above. As shown, the non-access stratum (NAS) 710 may include a 5G NAS 720 and a legacy NAS 750. The legacy NAS 750 may include a communication connection with a legacy access stratum (AS) 770. The 5G NAS 720 may include communication connections with both a 5G AS 740 and a non-3GPP AS 730 and Wi-Fi AS 732. The 5G NAS 720 may include functional entities associated with both access stratums. Thus, the 5G NAS 720 may include multiple 5G MM entities 726 and 728 and 5G session management (SM) entities 722 and 724. The legacy NAS 750 may include functional entities such as short message service (SMS) entity 752, evolved packet system (EPS) session management (ESM) entity 754, session management (SM) entity 756, EPS mobility management (EMM) entity 758, and mobility management (MM)/ GPRS mobility management (GMM) entity 760. In addition, the legacy AS 770 may include functional entities such as LTE AS 772, UMTS AS 774, and/or GSM/GPRS AS 776.

[0109] Thus, the baseband processor architecture 700 allows for a common 5G-NAS for both 5G cellular and non-cellular (e.g., non-3GPP access). Note that as shown, the 5G MM may maintain individual connection management and registration management state machines for each connection. Additionally, a device (e.g., UE 106) may register to a single PLMN (e.g., 5G CN) using 5G cellular access as well as non-cellular access. Further, it may be possible for the device to be in a connected state in one access and an idle state in another access and vice versa. Finally, there may be common 5G-MM procedures (e.g., registration, de-registration, identification, authentication, as so forth) for both accesses.

[0110] Note that in various embodiments, one or more of the above-described functional entities of the 5G NAS and/or 5G AS may be configured to perform methods for enhanced system information reading in NTNs, including systems, methods, and mechanisms to determining timing and/or occasion for a UE to read system information as well as determining scheduling restrictions when system information reading collides with other UE behaviors, e.g., such as receiving data and/or control channels from a serving cell, uplink transmissions, and/or radio resource management (RRM) measurements, e.g., in 5G NR systems and beyond, e.g., as further described herein.

System Information Reading Mechanism Enhancement

[0111] In 3GPP standards development, various agreements have been reached for system information (SI) reading for non-terrestrial networks (NTNs). For example, if valid neighbor cell's and/or target cell's timing information in terms of validity or accuracy is not provided to a UE, it has been agreed to define availability of valid target satellite information as a side condition. Further, it has been agreed that required parameters for measurement include ephemeris (e.g., position over time and/or velocity over time), epoch time (e.g., a number of seconds that have elapsed since January 1, 1970, 12:00 am Greenwich Mean Time (GMT), not counting leap seconds) SMTCs (SSB (synchronization signal block) based measurement timing configuration), downlink polarization information, serving cell stop time and reference location for idle mode measurement trigger in non-geostationary orbit (NGSO) fixed cell (if applicable), feeder link delay (e.g., common timing advance and K_MAC (e.g., an indicator of a magnitude of unalignment between downlink and uplink frame timing on the network (e.g., base station) side) of the neighbor cell for neighbor cell SMTC adjustment, as well as separate validity timers. Additionally, it has been agreed that required parameters for mobility include target cell ephemeris information, epoch time of the ephemeris, common timing advance, validity timer information for target cell mobility, downlink and uplink polarization information, K_offset, and K_MAC (e.g., to determine UE-base station round trip time and perform RACH to a target cell). In addition, if the side condition is not met, then requirements may not be applied, e.g., an extra delay will not be explicitly defined. Note that a UE is allowed to not perform radio resource management (RRM) measurement (as well as reporting) if the side condition is not met before acquiring new ephemeris information.

[0112] Furter, regarding measurement requirements and serving cell system information block (SIB) reading time, it has been agreed that if essential information for NTN neighbor cell measurement is not provided, then no requirement is applied. However, a UE needs to read the system information for satellite information before measurement or mobility behavior. However, it has not yet been defined (e.g., agreed upon) when the UE should perform system information reading for satellite information on a serving cell or what UE behavior during system information reading should be, e.g., such as when system information reading collides with data reception and/or such as when system information reading collides with uplink transmission.

[0113] Embodiments described herein provided systems, methods, and mechanisms for enhanced system information reading in NTNs, including systems, methods, and mechanisms to determining timing and/or occasion for a UE to read system information as well as determining scheduling restrictions when system information reading collides with other UE

behaviors, e.g., such as receiving data and/or control channels from a serving cell, uplink transmissions, and/or radio resource management (RRM) measurements.

[0114] For example, in some embodiments, a network (e.g., a base station) may update system information for satellite information (e.g., ephemeris information) in a periodic manner, e.g., every X milliseconds (ms). Note that system information may include a master information block (MIB), a system information block (SIB) 1 (SIB1), and/or a SIBx used for ephemeris and other satellite information. The UE may read system information of its serving cell or target cell. The system information may include ephemeris and other satellite information for neighbor cells and/or target cells. In some instances, a UE may read (e.g., receive) system information periodically, based on an event, based on a mobility condition, based on network triggering, and/or based on UE behavior.

[0115] For example, in some instances, a UE may read system information every X milliseconds to every k*X milliseconds, where k is a scaling factor based on network system information update rate (e.g., periodicity). In some examples, X may be predefined, e.g., by 3GPP standards, and/or network specified or configured. In some examples, k may be predefined, e.g., by 3GPP standards, and/or network specified or configured.

[0116] As another example, in some instances, a UE may read (e.g., receive) system information based, at least in part, on a triggering event (e.g., system information reading may be event based). For example, when a network configures a measurement object to the UE, the UE may be triggered to read system information of a serving cell to prepare for the measurement object. As another example, when a network configures a handover to the, the UE may be triggered to read system information of a source serving cell for target cell measurement for handover purposes. As a further example, before the UE starts to perform radio resource control (RRC) re-establishment after a radio link failure (RLF), the UE may be triggered to read system information of a target cell for RRC reestablishment on the target cell.

[0117] As a further example, in some instances, a UE may read system information based on a mobility condition obtaining, e.g., such as a channel condition, a timing condition, and/or a distance condition. For example, when a serving cell signal quality or strength is below a threshold, the UE may be triggered to read system information of the serving cell, e.g., to prepare measurements for mobility. The threshold may be predefined, e.g., by a 3GPP standard, and/or signaled by the network. As another example, when configured timing is reached, the UE may be triggered to read system information of a source serving cell for target cell measurement for mobility. Note that the configured timing is a timing to indicate from when UE is allowed to perform mobility, e.g., network indicate UE may perform handover within

[T1, T2]. The UE may read the system information after T1 but before T2. As a further example, when a configured distance threshold is met, the UE may be triggered to read system information of a serving cell to prepare measurements for mobility. The distance threshold may be a distance between the UE and the serving cell and/or a distance between the UE and a target cell. The distance threshold may be predefined, e.g., by a 3GPP standard, and/or signaled by the network.

[0118] As yet another example, in some instances, a UE may read system information when triggered by a network indication. For example, a network may indicate to the UE when it updates the system information for satellite information. Then, based on the network indication, the UE may read the system information. As another example, a network may indicate a periodicity to the UE for system information reading for satellite information. As a further example, a network may command the UE to read system information for satellite information, e.g., by transmitting, to the UE, an indication to trigger system information reading at the UE.

[0119] As a yet further example, in some instances, a UE may read the system information before the UE performs certain behaviors (or functions). For example, the UE may read system information for satellite information before a serving cell or a neighbor cell measurement. As another example, the UE may read system information for satellite information before any RACH transmission.

[0120] In some instances, when a system information for satellite information reading occasion collides with data channel and/or control channel reception from a serving cell and a UE is not capable of receiving both the system information for satellite information and the data channel and/or control channel (substantially) concurrently, a scheduling restriction may be applied to the data channel and/or control channel. In other words, the UE may prioritize system information for satellite information reading and drop (skip) the data channel and/or control channel reception.

[0121] In some instances, when a system information for satellite information reading occasion collides with data channel and/or control channel reception from a serving cell and a UE is not capable of receiving both the system information for satellite information and the data channel and/or control channel (substantially) concurrently, a scheduling restriction may be applied to a data channel but not to a control channel. In other words, the UE may prioritize system information for satellite information reading and drop (skip) the data channel reception. However, the UE may prioritize control channel (e.g., paging) reception over system information for satellite information reading and drop (skip) system information for satellite information reception.

[0122] In some instances, when a system information for satellite information reading occasion collides with uplink channel transmission (e.g., due to time division duplex (TDD) configuration and/or due to half duplex frequency division duplex (FDD) configuration), a scheduling restriction may be applied to uplink channels. In other words, the UE may prioritize system information for satellite information reading over uplink channel transmission and drop (skip) uplink channel transmission.

[0123] In some instances, when a system information for satellite information reading occasion collides with uplink channel transmission (e.g., due to TDD configuration and/or due to half duplex FDD configuration), a scheduling restriction may be applied to satellite information reading. In other words, the UE may prioritize uplink channel transmission over system information for satellite information reading and drop (skip) system information for satellite information reception.

[0124] In some instances, when a system information for satellite information reading occasion collides with uplink channel transmission (e.g., due to TDD configuration and/or due to half duplex FDD configuration), a scheduling restriction may be applied to uplink channels unless the uplink channel transmission is an aperiodic uplink channel transmission (e.g., such as aperiodic sounding reference signal (SRS) transmission) and/or hybrid automatic repeat request (HARQ) feedback. In other words, the UE may prioritize aperiodic uplink channel transmission and/or HARQ feedback transmissions over system information for satellite information reading and drop (skip) system information for satellite information reception and may prioritize system information for satellite information reading over all other types of uplink channel transmission and drop (skip) such uplink channel transmissions.

[0125] In some instances, when a system information for satellite information reading occasion collides with a measurement occasion such as mobility based RRM measurements (e.g., SSB/CSI-RS for layer 3 (L3) measurement) and/or RRM measurements for layer 1 (L1) (e.g., RLM/CBD/BFD/L1-RSRP measurements) and the UE is not capable of receiving both system information and measurement occasions (substantially) concurrently, the UE may apply a measurement restriction to the measurement occasion. In other words, the UE may prioritize system information for satellite information reading over performing measurements, e.g., over performing L3 measurement and/or L1 measurement, and may drop (skip) the measurement occasion.

[0126] In some instances, when a system information for satellite information reading occasion collides with a measurement occasion such as mobility based RRM measurements (e.g., SSB/CSI-RS for layer 3 (L3) measurement) and/or RRM measurements for layer 1 (L1) (e.g.,

RLM/CBD/BFD/L1-RSRP measurements) and the UE is not capable of receiving both system information and measurement occasions (substantially) concurrently, the UE may prioritize the measurement occasion over system information for satellite information reading. In other words, the UE may perform the mobility based RRM measurements and/or the RRM measurements for L1 and drop (skip) system information for satellite information reception.

[0127] In some instances, when a system information for satellite information reading occasion collides with a measurement occasion such as mobility based RRM measurements (e.g., SSB/CSI-RS for layer 3 (L3) measurement) and/or RRM measurements for layer 1 (L1) (e.g., RLM/CBD/BFD/L1-RSRP measurements) and the UE is not capable of receiving both system information and measurement occasions (substantially) concurrently, the UE may prioritize the RRM measurements for L1 over system information for satellite information reading, but not the mobility based RRM measurements. In other words, the UE may perform the RRM measurements for L1 and drop (skip) system information for satellite information reception but prioritize system information for satellite information reading over performing mobility based RRM measurements, e.g., over performing L3 measurement, and may drop (skip) the mobility based RRM measurements.

[0128] In some instances, when a system information for satellite information reading occasion collides with a measurement occasion such as mobility based RRM measurements (e.g., SSB/CSI-RS for layer 3 (L3) measurement) and/or RRM measurements for layer 1 (L1) (e.g., RLM/CBD/BFD/L1-RSRP measurements) and the UE is not capable of receiving both system information and measurement occasions (substantially) concurrently, the UE may prioritize certain RRM measurements for L1 (e.g., such as L1 AP measurements) over system information for satellite information reading, but not any other type of measurement occasion. In other words, the UE may perform the certain RRM measurements (e.g., such as L1 AP measurements) for L1 and drop (skip) system information for satellite information reception but prioritize system information for satellite information reading over all other measurement occasions and may drop (skip) the other types measurement occasion.

[0129] Figure 8 illustrates a block diagram of an example of a method for receiving satellite information from a non-terrestrial network (NTN), according to some embodiments. The method shown in Figure 8 may be used in conjunction with any of the systems, methods, or devices shown in the Figures, among other devices. In various embodiments, some of the method elements shown may be performed concurrently, in a different order than shown, or may be omitted. Additional method elements may also be performed as desired. As shown, this method may operate as follows.

[0130] At 802, a UE, such as UE 106, may determine that a triggering event for system information for satellite information reading has occurred. The triggering event for system information for satellite information reading may include at least one of a network behavior, a UE behavior, a channel condition, a timing condition, a distance condition, or a network indication.

[0131] In some instances, the network behavior may include a network periodically updating system information for satellite information. In such instances, to determine that the triggering event for system information for satellite information reading has occurred, the UE may determine that a period of time has elapsed since a previous reading of system information for satellite information reading. The period of time may be based, at least in part, on a periodicity of a network update of the system information for satellite information reading. The periodicity of the network update may be defined by 3GPP standards. In some instances, the period of time may be based, at least in part, on a scaled periodicity of a network update of the system information for satellite information reading. The scaled periodicity may be a product of a scaling factor and a periodicity of the network update. The scaling factor may be defined by 3GPP standards.

[0132] In some instances, the network behavior may include configuration of a measurement object to the UE. In such instances, to determine that the triggering event for system information for satellite information reading has occurred, the UE may determine to read the system information for satellite information to prepare for the measurement object.

[0133] In some instances, the network behavior may include configuration of a handover to the UE. In such instances, to determine that the triggering event for system information for satellite information reading has occurred, the UE may determine to read the system information for satellite information to prepare for the handover. In some instances, to read, based on the triggering event occurring, the system information for satellite information, the UE may read system information from a source serving cell for satellite information of target cell measurement for handover purposes.

[0134] In some instances, the UE behavior may include performance of radio resource control (RRC) re-establishment after radio link failure (RLF). In such instances, to determine that the triggering event for system information for satellite information reading has occurred, the UE may determine to read the system information for satellite information of a target cell RRC re-establishment on the target cell.

[0135] In some instances, the UE behavior may include performance of serving cell or neighbor cell measurements. In such instances, to determine that the triggering event for system

information for satellite information reading has occurred, the UE may determine to read the system information for satellite information prior to performing the serving cell or neighbor cell measurements.

[0136] In some instances, the UE behavior may include performance of a random access channel (RACH) transmission. In such instances, to determine that the triggering event for system information for satellite information reading has occurred, the UE may determine to read the system information for satellite information prior to performing the RACH transmission.

[0137] In some instances, the channel condition may include a serving cell signal quality dropping below a threshold. In such instances, to determine that the triggering event for system information for satellite information reading has occurred, the UE may determine that the serving cell signal quality is less than the threshold. In such instances, to read, based on the triggering event occurring, the system information for satellite information, the UE may read system information for satellite information of a serving cell to prepare for mobility measurements. The threshold may be defined by 3GPP standards or signaled by a network.

[0138] In some instances, the channel condition may include a serving cell signal strength dropping below a threshold. In such instances, to determine that the triggering event for system information for satellite information reading has occurred, the UE may determine that the serving cell signal strength is less than the threshold. In such instances, to read, based on the triggering event occurring, the system information for satellite information, the UE may read system information for satellite information of a serving cell to prepare for mobility measurements. The threshold may be defined by 3GPP standards or signaled by a network.

[0139] In some instances, the timing condition may include a configured mobility window during which the UE is allowed to perform mobility procedures. In such instances, to determine that the triggering event for system information for satellite information reading has occurred, the UE may determine that the configured mobility window has started but not ended. In such instances, to read, based on the triggering event occurring, the system information for satellite information, the UE may read system information for satellite information of a serving cell for target cell measurement for mobility procedures.

[0140] In some instances, the distance condition may include a distance between the UE and a serving cell exceeding a threshold. In such instances, to determine that the triggering event for system information for satellite information reading has occurred, the UE may determine that distance from the UE to the serving is greater than the threshold. The threshold may be defined by 3GPP standards or signaled by a network.

[0141] In some instances, the distance condition may include a distance between the UE and a target cell dropping below a threshold. In such instances, to determine that the triggering event for system information for satellite information reading has occurred, the UE may determine that distance from the UE to the target cell is less than the threshold. The threshold may be defined by 3GPP standards or signaled by a network.

[0142] In some instances, the network indication may be at least one of an explicit command or a periodicity for reading system information for satellite information. In some instances, the UE may receive the explicit command each time a network updates system information for satellite information.

[0143] At 804, the UE may read, based on the triggering event occurring, the system information for satellite information. The system information for satellite information reading may include at least ephemeris information. In some instances, the system information for satellite information reading may (additionally) include epoch time (e.g., a number of seconds that have elapsed since January 1, 1970, 12:00 am Greenwich Mean Time (GMT), not counting leap seconds) SMTCs (SSB (synchronization signal block) based measurement timing configuration), downlink polarization information, serving cell stop time and reference location for idle mode measurement trigger in non-geostationary orbit (NGSO) fixed cell (if applicable), feeder link delay (e.g., common timing advance and K_MAC (e.g., an indicator of a magnitude of unalignment between downlink and uplink frame timing on the network (e.g., base station) side) of the neighbor cell for neighbor cell SMTC adjustment, separate validity timers, target cell ephemeris information, epoch time of the ephemeris, common timing advance, validity timer information for target cell mobility, downlink and uplink polarization information, K_offset, and/or K_MAC (e.g., to determine UE-base station round trip time and perform RACH to a target cell). In some instances, the system information for satellite information reading may include one or more of a master information block (MIB), a system information block 1 (SIB1) or a SIBx. In some instances, reading, based on the triggering event occurring, the system information for satellite information may include the UE reading system information of a serving cell of the UE. In some instances, the system information of the serving cell of the UE may include system information for satellite information of neighbor cells or target cells.

[0144] In some instances, the UE may determine that a system information for satellite information reading occasion collides with receiving a data channel or control channel from a serving cell. The UE may prioritize the system information for satellite information reading occasion over receiving the data channel. The UE may drop reception of the data channel. In

some instances, the UE may prioritize the system information for satellite information reading occasion over receiving the control channel and drop reception of the control channel. In some instances, the UE may prioritize receiving the control channel over the system information for satellite information reading occasion and skip the system information for satellite information reading occasion.

[0145] In some instances, the UE may determine that a system information for satellite information reading occasion collides with uplink transmission. The UE may prioritize the system information for satellite information reading occasion over the uplink transmission. The UE may skip the uplink transmission.

[0146] In some instances, the UE may determine that a system information for satellite information reading occasion collides with uplink transmission. The UE may prioritize the uplink transmission over the system information for satellite information reading occasion. The UE may skip the system information for satellite information reading occasion.

[0147] In some instances, the UE may determine that a system information for satellite information reading occasion collides with uplink transmission. The UE may prioritize, based on determining that the uplink transmission is an aperiodic uplink transmission, the uplink transmission over the system information for satellite information reading occasion. The UE may skip the system information for satellite information reading occasion. In some instances, the UE may prioritize, based on determining that the uplink transmission is a periodic or semi-persistent uplink transmission, the system information for satellite information reading occasion over the uplink transmission and skip the uplink transmission.

[0148] In some instances, the UE may determine that a system information for satellite information reading occasion collides with a measurement occasion. The measurement occasion may be one of a layer 1 (L1) measurement occasion or a layer 3 (L3) measurement occasion. The UE may prioritize the system information for satellite information reading occasion over the measurement occasion. The UE may skip the measurement occasion.

[0149] In some instances, the UE may determine that a system information for satellite information reading occasion collides with a measurement occasion. The measurement occasion may be one of a layer 1 (L1) measurement occasion or a layer 3 (L3) measurement occasion. The UE may prioritize the measurement occasion over the system information for satellite information reading occasion. The UE may skip the system information for satellite information reading occasion.

[0150] In some instances, the UE may determine that a system information for satellite information reading occasion collides with a measurement occasion. The measurement

occasion may be one of a layer 1 (L1) measurement occasion or a layer 3 (L3) measurement occasion. The UE may prioritize, based on determining that the measurement occasion is an L3 measurement occasion, the system information for satellite information reading occasion over the measurement occasion. The UE may skip the measurement occasion. In some instances, the UE may prioritize, based on determining that the measurement occasion is an L1 measurement occasion, the measurement occasion over the system information for satellite information reading occasion and skip the system information for satellite information reading occasion.

[0151] In some instances, the UE may determine that a system information for satellite information reading occasion collides with a measurement occasion. The measurement occasion may be one of a layer 1 (L1) measurement occasion or a layer 3 (L3) measurement occasion. The UE may prioritize, based on determining that the measurement occasion is an aperiodic measurement occasion, the measurement occasion over the system information for satellite information reading occasion. The UE may skip the system information for satellite information reading occasion. In some instances, the UE may prioritize, based on determining that the measurement occasion is a periodic or semi-persistent measurement occasion, the system information for satellite information reading occasion over the measurement occasion and skip the measurement occasion.

[0152] Figure 9 illustrates a block diagram of an example of a method for mitigating a collision between receiving satellite information from a non-terrestrial network (NTN) and receiving a data channel or control channel, according to some embodiments. The method shown in Figure 9 may be used in conjunction with any of the systems, methods, or devices shown in the Figures, among other devices. In various embodiments, some of the method elements shown may be performed concurrently, in a different order than shown, or may be omitted. Additional method elements may also be performed as desired. As shown, this method may operate as follows.

[0153] At 902, a UE, such as UE 106, may determine that a system information for satellite information reading occasion collides with receiving a data channel or control channel from a serving cell.

[0154] At 904, the UE may prioritize the system information for satellite information reading occasion over receiving the data channel.

[0155] At 906, the UE may drop reception of the data channel.

[0156] In some instances, the UE may prioritize the system information for satellite information reading occasion over receiving the control channel and drop reception of the

control channel. In some instances, the UE may prioritize receiving the control channel over the system information for satellite information reading occasion and skip the system information for satellite information reading occasion.

[0157] In some instances, the UE may determine that a triggering event for system information for satellite information reading has occurred. The triggering event for system information for satellite information reading may include at least one of a network behavior, a UE behavior, a channel condition, a timing condition, a distance condition, or a network indication. The UE may read, based on the triggering event occurring, the system information for satellite information. The system information for satellite information reading may include at least ephemeris information. In some instances, the system information for satellite information reading may (additionally) include epoch time (e.g., a number of seconds that have elapsed since January 1, 1970, 12:00 am Greenwich Mean Time (GMT), not counting leap seconds) SMTCs (SSB (synchronization signal block) based measurement timing configuration), downlink polarization information, serving cell stop time and reference location for idle mode measurement trigger in non-geostationary orbit (NGSO) fixed cell (if applicable), feeder link delay (e.g., common timing advance and K_MAC (e.g., an indicator of a magnitude of unalignment between downlink and uplink frame timing on the network (e.g., base station) side) of the neighbor cell for neighbor cell SMTC adjustment, separate validity timers, target cell ephemeris information, epoch time of the ephemeris, common timing advance, validity timer information for target cell mobility, downlink and uplink polarization information, K_offset, and/or K_MAC (e.g., to determine UE-base station round trip time and perform RACH to a target cell). In some instances, the system information for satellite information reading may include one or more of a master information block (MIB), a system information block 1 (SIB1) or a SIBx. In some instances, reading, based on the triggering event occurring, the system information for satellite information may include the UE reading system information of a serving cell of the UE. In some instances, the system information of the serving cell of the UE may include system information for satellite information of neighbor cells or target cells.

[0158] In some instances, the network behavior may include a network periodically updating system information for satellite information. In such instances, to determine that the triggering event for system information for satellite information reading has occurred, the UE may determine that a period of time has elapsed since a previous reading of system information for satellite information reading. The period of time may be based, at least in part, on a periodicity of a network update of the system information for satellite information reading. The periodicity

of the network update may be defined by 3GPP standards. In some instances, the period of time may be based, at least in part, on a scaled periodicity of a network update of the system information for satellite information reading. The scaled periodicity may be a product of a scaling factor and a periodicity of the network update. The scaling factor may be defined by 3GPP standards.

[0159] In some instances, the network behavior may include configuration of a measurement object to the UE. In such instances, to determine that the triggering event for system information for satellite information reading has occurred, the UE may determine to read the system information for satellite information to prepare for the measurement object.

[0160] In some instances, the network behavior may include configuration of a handover to the UE. In such instances, to determine that the triggering event for system information for satellite information reading has occurred, the UE may determine to read the system information for satellite information to prepare for the handover. In some instances, to read, based on the triggering event occurring, the system information for satellite information, the UE may read system information from a source serving cell for satellite information of target cell measurement for handover purposes.

[0161] In some instances, the UE behavior may include performance of radio resource control (RRC) re-establishment after radio link failure (RLF). In such instances, to determine that the triggering event for system information for satellite information reading has occurred, the UE may determine to read the system information for satellite information of a target cell RRC re-establishment on the target cell.

[0162] In some instances, the UE behavior may include performance of serving cell or neighbor cell measurements. In such instances, to determine that the triggering event for system information for satellite information reading has occurred, the UE may determine to read the system information for satellite information prior to performing the serving cell or neighbor cell measurements.

[0163] In some instances, the UE behavior may include performance of a random access channel (RACH) transmission. In such instances, to determine that the triggering event for system information for satellite information reading has occurred, the UE may determine to read the system information for satellite information prior to performing the RACH transmission.

[0164] In some instances, the channel condition may include a serving cell signal quality dropping below a threshold. In such instances, to determine that the triggering event for system information for satellite information reading has occurred, the UE may determine that the

serving cell signal quality is less than the threshold. In such instances, to read, based on the triggering event occurring, the system information for satellite information, the UE may read system information for satellite information of a serving cell to prepare for mobility measurements. The threshold may be defined by 3GPP standards or signaled by a network.

[0165] In some instances, the channel condition may include a serving cell signal strength dropping below a threshold. In such instances, to determine that the triggering event for system information for satellite information reading has occurred, the UE may determine that the serving cell signal strength is less than the threshold. In such instances, to read, based on the triggering event occurring, the system information for satellite information, the UE may read system information for satellite information of a serving cell to prepare for mobility measurements. The threshold may be defined by 3GPP standards or signaled by a network.

[0166] In some instances, the timing condition may include a configured mobility window during which the UE is allowed to perform mobility procedures. In such instances, to determine that the triggering event for system information for satellite information reading has occurred, the UE may determine that the configured mobility window has started but not ended. In such instances, to read, based on the triggering event occurring, the system information for satellite information, the UE may read system information for satellite information of a serving cell for target cell measurement for mobility procedures.

[0167] In some instances, the distance condition may include a distance between the UE and a serving cell exceeding a threshold. In such instances, to determine that the triggering event for system information for satellite information reading has occurred, the UE may determine that distance from the UE to the serving is greater than the threshold. The threshold may be defined by 3GPP standards or signaled by a network.

[0168] In some instances, the distance condition may include a distance between the UE and a target cell dropping below a threshold. In such instances, to determine that the triggering event for system information for satellite information reading has occurred, the UE may determine that distance from the UE to the target cell is less than the threshold. The threshold may be defined by 3GPP standards or signaled by a network.

[0169] In some instances, the network indication may be at least one of an explicit command or a periodicity for reading system information for satellite information. In some instances, the UE may receive the explicit command each time a network updates system information for satellite information.

[0170] Figure 10 illustrates a block diagram of an example of a method for mitigating a collision between receiving satellite information from a non-terrestrial network (NTN) and an

uplink transmission, according to some embodiments. The method shown in Figure 10 may be used in conjunction with any of the systems, methods, or devices shown in the Figures, among other devices. In various embodiments, some of the method elements shown may be performed concurrently, in a different order than shown, or may be omitted. Additional method elements may also be performed as desired. As shown, this method may operate as follows.

[0171] At 1002, a UE, such as UE 106, may determine that a system information for satellite information reading occasion collides with uplink transmission.

[0172] At 1004, the UE may prioritize the system information for satellite information reading occasion over the uplink transmission.

[0173] At 1006, the UE may skip the uplink transmission.

[0174] In some instances, the UE may determine that a triggering event for system information for satellite information reading has occurred. The triggering event for system information for satellite information reading may include at least one of a network behavior, a UE behavior, a channel condition, a timing condition, a distance condition, or a network indication. The UE may read, based on the triggering event occurring, the system information for satellite information. The system information for satellite information reading may include at least ephemeris information. In some instances, the system information for satellite information reading may (additionally) include epoch time (e.g., a number of seconds that have elapsed since January 1, 1970, 12:00 am Greenwich Mean Time (GMT), not counting leap seconds) SMTCs (SSB (synchronization signal block) based measurement timing configuration), downlink polarization information, serving cell stop time and reference location for idle mode measurement trigger in non-geostationary orbit (NGSO) fixed cell (if applicable), feeder link delay (e.g., common timing advance and K_MAC (e.g., an indicator of a magnitude of unalignment between downlink and uplink frame timing on the network (e.g., base station) side) of the neighbor cell for neighbor cell SMTC adjustment, separate validity timers, target cell ephemeris information, epoch time of the ephemeris, common timing advance, validity timer information for target cell mobility, downlink and uplink polarization information, K_offset, and/or K_MAC (e.g., to determine UE-base station round trip time and perform RACH to a target cell). In some instances, the system information for satellite information reading may include one or more of a master information block (MIB), a system information block 1 (SIB1) or a SIBx. In some instances, reading, based on the triggering event occurring, the system information for satellite information may include the UE reading system information of a serving cell of the UE. In some instances, the system information of the serving

cell of the UE may include system information for satellite information of neighbor cells or target cells.

[0175] In some instances, the network behavior may include a network periodically updating system information for satellite information. In such instances, to determine that the triggering event for system information for satellite information reading has occurred, the UE may determine that a period of time has elapsed since a previous reading of system information for satellite information reading. The period of time may be based, at least in part, on a periodicity of a network update of the system information for satellite information reading. The periodicity of the network update may be defined by 3GPP standards. In some instances, the period of time may be based, at least in part, on a scaled periodicity of a network update of the system information for satellite information reading. The scaled periodicity may be a product of a scaling factor and a periodicity of the network update. The scaling factor may be defined by 3GPP standards.

[0176] In some instances, the network behavior may include configuration of a measurement object to the UE. In such instances, to determine that the triggering event for system information for satellite information reading has occurred, the UE may determine to read the system information for satellite information to prepare for the measurement object.

[0177] In some instances, the network behavior may include configuration of a handover to the UE. In such instances, to determine that the triggering event for system information for satellite information reading has occurred, the UE may determine to read the system information for satellite information to prepare for the handover. In some instances, to read, based on the triggering event occurring, the system information for satellite information, the UE may read system information from a source serving cell for satellite information of target cell measurement for handover purposes.

[0178] In some instances, the UE behavior may include performance of radio resource control (RRC) re-establishment after radio link failure (RLF). In such instances, to determine that the triggering event for system information for satellite information reading has occurred, the UE may determine to read the system information for satellite information of a target cell RRC re-establishment on the target cell.

[0179] In some instances, the UE behavior may include performance of serving cell or neighbor cell measurements. In such instances, to determine that the triggering event for system information for satellite information reading has occurred, the UE may determine to read the system information for satellite information prior to performing the serving cell or neighbor cell measurements.

[0180] In some instances, the UE behavior may include performance of a random access channel (RACH) transmission. In such instances, to determine that the triggering event for system information for satellite information reading has occurred, the UE may determine to read the system information for satellite information prior to performing the RACH transmission.

[0181] In some instances, the channel condition may include a serving cell signal quality dropping below a threshold. In such instances, to determine that the triggering event for system information for satellite information reading has occurred, the UE may determine that the serving cell signal quality is less than the threshold. In such instances, to read, based on the triggering event occurring, the system information for satellite information, the UE may read system information for satellite information of a serving cell to prepare for mobility measurements. The threshold may be defined by 3GPP standards or signaled by a network.

[0182] In some instances, the channel condition may include a serving cell signal strength dropping below a threshold. In such instances, to determine that the triggering event for system information for satellite information reading has occurred, the UE may determine that the serving cell signal strength is less than the threshold. In such instances, to read, based on the triggering event occurring, the system information for satellite information, the UE may read system information for satellite information of a serving cell to prepare for mobility measurements. The threshold may be defined by 3GPP standards or signaled by a network.

[0183] In some instances, the timing condition may include a configured mobility window during which the UE is allowed to perform mobility procedures. In such instances, to determine that the triggering event for system information for satellite information reading has occurred, the UE may determine that the configured mobility window has started but not ended. In such instances, to read, based on the triggering event occurring, the system information for satellite information, the UE may read system information for satellite information of a serving cell for target cell measurement for mobility procedures.

[0184] In some instances, the distance condition may include a distance between the UE and a serving cell exceeding a threshold. In such instances, to determine that the triggering event for system information for satellite information reading has occurred, the UE may determine that distance from the UE to the serving is greater than the threshold. The threshold may be defined by 3GPP standards or signaled by a network.

[0185] In some instances, the distance condition may include a distance between the UE and a target cell dropping below a threshold. In such instances, to determine that the triggering event for system information for satellite information reading has occurred, the UE may determine

that distance from the UE to the target cell is less than the threshold. The threshold may be defined by 3GPP standards or signaled by a network.

[0186] In some instances, the network indication may be at least one of an explicit command or a periodicity for reading system information for satellite information. In some instances, the UE may receive the explicit command each time a network updates system information for satellite information.

[0187] Figure 11 illustrates a block diagram of an example of another method for mitigating a collision between receiving satellite information from a non-terrestrial network (NTN) and an uplink transmission, according to some embodiments. The method shown in Figure 11 may be used in conjunction with any of the systems, methods, or devices shown in the Figures, among other devices. In various embodiments, some of the method elements shown may be performed concurrently, in a different order than shown, or may be omitted. Additional method elements may also be performed as desired. As shown, this method may operate as follows.

[0188] At 1102, a UE, such as UE 106, may determine that a system information for satellite information reading occasion collides with uplink transmission.

[0189] At 1104, the UE may prioritize the uplink transmission over the system information for satellite information reading occasion.

[0190] At 1106, the UE may skip the system information for satellite information reading occasion.

[0191] In some instances, the UE may determine that a triggering event for system information for satellite information reading has occurred. The triggering event for system information for satellite information reading may include at least one of a network behavior, a UE behavior, a channel condition, a timing condition, a distance condition, or a network indication. The UE may read, based on the triggering event occurring, the system information for satellite information. The system information for satellite information reading may include at least ephemeris information. In some instances, the system information for satellite information reading may (additionally) include epoch time (e.g., a number of seconds that have elapsed since January 1, 1970, 12:00 am Greenwich Mean Time (GMT), not counting leap seconds) SMTCs (SSB (synchronization signal block) based measurement timing configuration), downlink polarization information, serving cell stop time and reference location for idle mode measurement trigger in non-geostationary orbit (NGSO) fixed cell (if applicable), feeder link delay (e.g., common timing advance and K_MAC (e.g., an indicator of a magnitude of unalignment between downlink and uplink frame timing on the network (e.g., base station) side) of the neighbor cell for neighbor cell SMTC adjustment, separate validity timers, target

cell ephemeris information, epoch time of the ephemeris, common timing advance, validity timer information for target cell mobility, downlink and uplink polarization information, K_offset, and/or K_MAC (e.g., to determine UE-base station round trip time and perform RACH to a target cell). In some instances, the system information for satellite information reading may include one or more of a master information block (MIB), a system information block 1 (SIB1) or a SIBx. In some instances, reading, based on the triggering event occurring, the system information for satellite information may include the UE reading system information of a serving cell of the UE. In some instances, the system information of the serving cell of the UE may include system information for satellite information of neighbor cells or target cells.

[0192] In some instances, the network behavior may include a network periodically updating system information for satellite information. In such instances, to determine that the triggering event for system information for satellite information reading has occurred, the UE may determine that a period of time has elapsed since a previous reading of system information for satellite information reading. The period of time may be based, at least in part, on a periodicity of a network update of the system information for satellite information reading. The periodicity of the network update may be defined by 3GPP standards. In some instances, the period of time may be based, at least in part, on a scaled periodicity of a network update of the system information for satellite information reading. The scaled periodicity may be a product of a scaling factor and a periodicity of the network update. The scaling factor may be defined by 3GPP standards.

[0193] In some instances, the network behavior may include configuration of a measurement object to the UE. In such instances, to determine that the triggering event for system information for satellite information reading has occurred, the UE may determine to read the system information for satellite information to prepare for the measurement object.

[0194] In some instances, the network behavior may include configuration of a handover to the UE. In such instances, to determine that the triggering event for system information for satellite information reading has occurred, the UE may determine to read the system information for satellite information to prepare for the handover. In some instances, to read, based on the triggering event occurring, the system information for satellite information, the UE may read system information from a source serving cell for satellite information of target cell measurement for handover purposes.

[0195] In some instances, the UE behavior may include performance of radio resource control (RRC) re-establishment after radio link failure (RLF). In such instances, to determine that the

triggering event for system information for satellite information reading has occurred, the UE may determine to read the system information for satellite information of a target cell RRC re-establishment on the target cell.

[0196] In some instances, the UE behavior may include performance of serving cell or neighbor cell measurements. In such instances, to determine that the triggering event for system information for satellite information reading has occurred, the UE may determine to read the system information for satellite information prior to performing the serving cell or neighbor cell measurements.

[0197] In some instances, the UE behavior may include performance of a random access channel (RACH) transmission. In such instances, to determine that the triggering event for system information for satellite information reading has occurred, the UE may determine to read the system information for satellite information prior to performing the RACH transmission.

[0198] In some instances, the channel condition may include a serving cell signal quality dropping below a threshold. In such instances, to determine that the triggering event for system information for satellite information reading has occurred, the UE may determine that the serving cell signal quality is less than the threshold. In such instances, to read, based on the triggering event occurring, the system information for satellite information, the UE may read system information for satellite information of a serving cell to prepare for mobility measurements. The threshold may be defined by 3GPP standards or signaled by a network.

[0199] In some instances, the channel condition may include a serving cell signal strength dropping below a threshold. In such instances, to determine that the triggering event for system information for satellite information reading has occurred, the UE may determine that the serving cell signal strength is less than the threshold. In such instances, to read, based on the triggering event occurring, the system information for satellite information, the UE may read system information for satellite information of a serving cell to prepare for mobility measurements. The threshold may be defined by 3GPP standards or signaled by a network.

[0200] In some instances, the timing condition may include a configured mobility window during which the UE is allowed to perform mobility procedures. In such instances, to determine that the triggering event for system information for satellite information reading has occurred, the UE may determine that the configured mobility window has started but not ended. In such instances, to read, based on the triggering event occurring, the system information for satellite information, the UE may read system information for satellite information of a serving cell for target cell measurement for mobility procedures.

[0201] In some instances, the distance condition may include a distance between the UE and a serving cell exceeding a threshold. In such instances, to determine that the triggering event for system information for satellite information reading has occurred, the UE may determine that distance from the UE to the serving is greater than the threshold. The threshold may be defined by 3GPP standards or signaled by a network.

[0202] In some instances, the distance condition may include a distance between the UE and a target cell dropping below a threshold. In such instances, to determine that the triggering event for system information for satellite information reading has occurred, the UE may determine that distance from the UE to the target cell is less than the threshold. The threshold may be defined by 3GPP standards or signaled by a network.

[0203] In some instances, the network indication may be at least one of an explicit command or a periodicity for reading system information for satellite information. In some instances, the UE may receive the explicit command each time a network updates system information for satellite information.

[0204] Figure 12 illustrates a block diagram of an example of yet another method for mitigating a collision between receiving satellite information from a non-terrestrial network (NTN) and an uplink transmission, according to some embodiments. The method shown in Figure 12 may be used in conjunction with any of the systems, methods, or devices shown in the Figures, among other devices. In various embodiments, some of the method elements shown may be performed concurrently, in a different order than shown, or may be omitted. Additional method elements may also be performed as desired. As shown, this method may operate as follows.

[0205] At 1202, a UE, such as UE 106, may determine that a system information for satellite information reading occasion collides with uplink transmission.

[0206] At 1204, the UE may prioritize, based on determining that the uplink transmission is an aperiodic uplink transmission, the uplink transmission over the system information for satellite information reading occasion.

[0207] At 1206, the UE may skip the system information for satellite information reading occasion.

[0208] In some instances, the UE may prioritize, based on determining that the uplink transmission is a periodic or semi-persistent uplink transmission, the system information for satellite information reading occasion over the uplink transmission and skip the uplink transmission.

[0209] In some instances, the UE may determine that a triggering event for system information for satellite information reading has occurred. The triggering event for system information for

satellite information reading may include at least one of a network behavior, a UE behavior, a channel condition, a timing condition, a distance condition, or a network indication. The UE may read, based on the triggering event occurring, the system information for satellite information. The system information for satellite information reading may include at least ephemeris information. In some instances, the system information for satellite information reading may (additionally) include epoch time (e.g., a number of seconds that have elapsed since January 1, 1970, 12:00 am Greenwich Mean Time (GMT), not counting leap seconds) SMTCs (SSB (synchronization signal block) based measurement timing configuration), downlink polarization information, serving cell stop time and reference location for idle mode measurement trigger in non-geostationary orbit (NGSO) fixed cell (if applicable), feeder link delay (e.g., common timing advance and K_MAC (e.g., an indicator of a magnitude of unalignment between downlink and uplink frame timing on the network (e.g., base station) side) of the neighbor cell for neighbor cell SMTC adjustment, separate validity timers, target cell ephemeris information, epoch time of the ephemeris, common timing advance, validity timer information for target cell mobility, downlink and uplink polarization information, K_offset, and/or K_MAC (e.g., to determine UE-base station round trip time and perform RACH to a target cell). In some instances, the system information for satellite information reading may include one or more of a master information block (MIB), a system information block 1 (SIB1) or a SIBx. In some instances, reading, based on the triggering event occurring, the system information for satellite information may include the UE reading system information of a serving cell of the UE. In some instances, the system information of the serving cell of the UE may include system information for satellite information of neighbor cells or target cells.

[0210] In some instances, the network behavior may include a network periodically updating system information for satellite information. In such instances, to determine that the triggering event for system information for satellite information reading has occurred, the UE may determine that a period of time has elapsed since a previous reading of system information for satellite information reading. The period of time may be based, at least in part, on a periodicity of a network update of the system information for satellite information reading. The periodicity of the network update may be defined by 3GPP standards. In some instances, the period of time may be based, at least in part, on a scaled periodicity of a network update of the system information for satellite information reading. The scaled periodicity may be a product of a scaling factor and a periodicity of the network update. The scaling factor may be defined by 3GPP standards.

[0211] In some instances, the network behavior may include configuration of a measurement object to the UE. In such instances, to determine that the triggering event for system information for satellite information reading has occurred, the UE may determine to read the system information for satellite information to prepare for the measurement object.

[0212] In some instances, the network behavior may include configuration of a handover to the UE. In such instances, to determine that the triggering event for system information for satellite information reading has occurred, the UE may determine to read the system information for satellite information to prepare for the handover. In some instances, to read, based on the triggering event occurring, the system information for satellite information, the UE may read system information from a source serving cell for satellite information of target cell measurement for handover purposes.

[0213] In some instances, the UE behavior may include performance of radio resource control (RRC) re-establishment after radio link failure (RLF). In such instances, to determine that the triggering event for system information for satellite information reading has occurred, the UE may determine to read the system information for satellite information of a target cell RRC re-establishment on the target cell.

[0214] In some instances, the UE behavior may include performance of serving cell or neighbor cell measurements. In such instances, to determine that the triggering event for system information for satellite information reading has occurred, the UE may determine to read the system information for satellite information prior to performing the serving cell or neighbor cell measurements.

[0215] In some instances, the UE behavior may include performance of a random access channel (RACH) transmission. In such instances, to determine that the triggering event for system information for satellite information reading has occurred, the UE may determine to read the system information for satellite information prior to performing the RACH transmission.

[0216] In some instances, the channel condition may include a serving cell signal quality dropping below a threshold. In such instances, to determine that the triggering event for system information for satellite information reading has occurred, the UE may determine that the serving cell signal quality is less than the threshold. In such instances, to read, based on the triggering event occurring, the system information for satellite information, the UE may read system information for satellite information of a serving cell to prepare for mobility measurements. The threshold may be defined by 3GPP standards or signaled by a network.

[0217] In some instances, the channel condition may include a serving cell signal strength dropping below a threshold. In such instances, to determine that the triggering event for system information for satellite information reading has occurred, the UE may determine that the serving cell signal strength is less than the threshold. In such instances, to read, based on the triggering event occurring, the system information for satellite information, the UE may read system information for satellite information of a serving cell to prepare for mobility measurements. The threshold may be defined by 3GPP standards or signaled by a network.

[0218] In some instances, the timing condition may include a configured mobility window during which the UE is allowed to perform mobility procedures. In such instances, to determine that the triggering event for system information for satellite information reading has occurred, the UE may determine that the configured mobility window has started but not ended. In such instances, to read, based on the triggering event occurring, the system information for satellite information, the UE may read system information for satellite information of a serving cell for target cell measurement for mobility procedures.

[0219] In some instances, the distance condition may include a distance between the UE and a serving cell exceeding a threshold. In such instances, to determine that the triggering event for system information for satellite information reading has occurred, the UE may determine that distance from the UE to the serving is greater than the threshold. The threshold may be defined by 3GPP standards or signaled by a network.

[0220] In some instances, the distance condition may include a distance between the UE and a target cell dropping below a threshold. In such instances, to determine that the triggering event for system information for satellite information reading has occurred, the UE may determine that distance from the UE to the target cell is less than the threshold. The threshold may be defined by 3GPP standards or signaled by a network.

[0221] In some instances, the network indication may be at least one of an explicit command or a periodicity for reading system information for satellite information. In some instances, the UE may receive the explicit command each time a network updates system information for satellite information.

[0222] Figure 13 illustrates a block diagram of an example of a method for mitigating a collision between receiving satellite information from a non-terrestrial network (NTN) and a measurement occasion, according to some embodiments. The method shown in Figure 13 may be used in conjunction with any of the systems, methods, or devices shown in the Figures, among other devices. In various embodiments, some of the method elements shown may be

performed concurrently, in a different order than shown, or may be omitted. Additional method elements may also be performed as desired. As shown, this method may operate as follows.

[0223] At 1302, a UE, such as UE 106, may determine that a system information for satellite information reading occasion collides with a measurement occasion. The measurement occasion may be one of a layer 1 (L1) measurement occasion or a layer 3 (L3) measurement occasion.

[0224] At 1304, the UE may prioritize the system information for satellite information reading occasion over the measurement occasion.

[0225] At 1306, the UE may skip the measurement occasion.

[0226] In some instances, the UE may determine that a triggering event for system information for satellite information reading has occurred. The triggering event for system information for satellite information reading may include at least one of a network behavior, a UE behavior, a channel condition, a timing condition, a distance condition, or a network indication. The UE may read, based on the triggering event occurring, the system information for satellite information. The system information for satellite information reading may include at least ephemeris information. In some instances, the system information for satellite information reading may (additionally) include epoch time (e.g., a number of seconds that have elapsed since January 1, 1970, 12:00 am Greenwich Mean Time (GMT), not counting leap seconds) SMTCs (SSB (synchronization signal block) based measurement timing configuration), downlink polarization information, serving cell stop time and reference location for idle mode measurement trigger in non-geostationary orbit (NGSO) fixed cell (if applicable), feeder link delay (e.g., common timing advance and K_MAC (e.g., an indicator of a magnitude of unalignment between downlink and uplink frame timing on the network (e.g., base station) side) of the neighbor cell for neighbor cell SMTC adjustment, separate validity timers, target cell ephemeris information, epoch time of the ephemeris, common timing advance, validity timer information for target cell mobility, downlink and uplink polarization information, K_offset, and/or K_MAC (e.g., to determine UE-base station round trip time and perform RACH to a target cell). In some instances, the system information for satellite information reading may include one or more of a master information block (MIB), a system information block 1 (SIB1) or a SIBx. In some instances, reading, based on the triggering event occurring, the system information for satellite information may include the UE reading system information of a serving cell of the UE. In some instances, the system information of the serving cell of the UE may include system information for satellite information of neighbor cells or target cells.

[0227] In some instances, the network behavior may include a network periodically updating system information for satellite information. In such instances, to determine that the triggering event for system information for satellite information reading has occurred, the UE may determine that a period of time has elapsed since a previous reading of system information for satellite information reading. The period of time may be based, at least in part, on a periodicity of a network update of the system information for satellite information reading. The periodicity of the network update may be defined by 3GPP standards. In some instances, the period of time may be based, at least in part, on a scaled periodicity of a network update of the system information for satellite information reading. The scaled periodicity may be a product of a scaling factor and a periodicity of the network update. The scaling factor may be defined by 3GPP standards.

[0228] In some instances, the network behavior may include configuration of a measurement object to the UE. In such instances, to determine that the triggering event for system information for satellite information reading has occurred, the UE may determine to read the system information for satellite information to prepare for the measurement object.

[0229] In some instances, the network behavior may include configuration of a handover to the UE. In such instances, to determine that the triggering event for system information for satellite information reading has occurred, the UE may determine to read the system information for satellite information to prepare for the handover. In some instances, to read, based on the triggering event occurring, the system information for satellite information, the UE may read system information from a source serving cell for satellite information of target cell measurement for handover purposes.

[0230] In some instances, the UE behavior may include performance of radio resource control (RRC) re-establishment after radio link failure (RLF). In such instances, to determine that the triggering event for system information for satellite information reading has occurred, the UE may determine to read the system information for satellite information of a target cell RRC re-establishment on the target cell.

[0231] In some instances, the UE behavior may include performance of serving cell or neighbor cell measurements. In such instances, to determine that the triggering event for system information for satellite information reading has occurred, the UE may determine to read the system information for satellite information prior to performing the serving cell or neighbor cell measurements.

[0232] In some instances, the UE behavior may include performance of a random access channel (RACH) transmission. In such instances, to determine that the triggering event for

system information for satellite information reading has occurred, the UE may determine to read the system information for satellite information prior to performing the RACH transmission.

[0233] In some instances, the channel condition may include a serving cell signal quality dropping below a threshold. In such instances, to determine that the triggering event for system information for satellite information reading has occurred, the UE may determine that the serving cell signal quality is less than the threshold. In such instances, to read, based on the triggering event occurring, the system information for satellite information, the UE may read system information for satellite information of a serving cell to prepare for mobility measurements. The threshold may be defined by 3GPP standards or signaled by a network.

[0234] In some instances, the channel condition may include a serving cell signal strength dropping below a threshold. In such instances, to determine that the triggering event for system information for satellite information reading has occurred, the UE may determine that the serving cell signal strength is less than the threshold. In such instances, to read, based on the triggering event occurring, the system information for satellite information, the UE may read system information for satellite information of a serving cell to prepare for mobility measurements. The threshold may be defined by 3GPP standards or signaled by a network.

[0235] In some instances, the timing condition may include a configured mobility window during which the UE is allowed to perform mobility procedures. In such instances, to determine that the triggering event for system information for satellite information reading has occurred, the UE may determine that the configured mobility window has started but not ended. In such instances, to read, based on the triggering event occurring, the system information for satellite information, the UE may read system information for satellite information of a serving cell for target cell measurement for mobility procedures.

[0236] In some instances, the distance condition may include a distance between the UE and a serving cell exceeding a threshold. In such instances, to determine that the triggering event for system information for satellite information reading has occurred, the UE may determine that distance from the UE to the serving is greater than the threshold. The threshold may be defined by 3GPP standards or signaled by a network.

[0237] In some instances, the distance condition may include a distance between the UE and a target cell dropping below a threshold. In such instances, to determine that the triggering event for system information for satellite information reading has occurred, the UE may determine that distance from the UE to the target cell is less than the threshold. The threshold may be defined by 3GPP standards or signaled by a network.

[0238] In some instances, the network indication may be at least one of an explicit command or a periodicity for reading system information for satellite information. In some instances, the UE may receive the explicit command each time a network updates system information for satellite information.

[0239] Figure 14 illustrates a block diagram of an example of another method for mitigating a collision between receiving satellite information from a non-terrestrial network (NTN) and a measurement occasion, according to some embodiments. The method shown in Figure 14 may be used in conjunction with any of the systems, methods, or devices shown in the Figures, among other devices. In various embodiments, some of the method elements shown may be performed concurrently, in a different order than shown, or may be omitted. Additional method elements may also be performed as desired. As shown, this method may operate as follows.

[0240] At 1402, a UE, such as UE 106, may determine that a system information for satellite information reading occasion collides with a measurement occasion. The measurement occasion may be one of a layer 1 (L1) measurement occasion or a layer 3 (L3) measurement occasion.

[0241] At 1404, the UE may prioritize the measurement occasion over the system information for satellite information reading occasion.

[0242] At 1406, the UE may skip the system information for satellite information reading occasion.

[0243] In some instances, the UE may determine that a triggering event for system information for satellite information reading has occurred. The triggering event for system information for satellite information reading may include at least one of a network behavior, a UE behavior, a channel condition, a timing condition, a distance condition, or a network indication. The UE may read, based on the triggering event occurring, the system information for satellite information. The system information for satellite information reading may include at least ephemeris information. In some instances, the system information for satellite information reading may (additionally) include epoch time (e.g., a number of seconds that have elapsed since January 1, 1970, 12:00 am Greenwich Mean Time (GMT), not counting leap seconds) SMTCs (SSB (synchronization signal block) based measurement timing configuration), downlink polarization information, serving cell stop time and reference location for idle mode measurement trigger in non-geostationary orbit (NGSO) fixed cell (if applicable), feeder link delay (e.g., common timing advance and K_MAC (e.g., an indicator of a magnitude of unalignment between downlink and uplink frame timing on the network (e.g., base station) side) of the neighbor cell for neighbor cell SMTC adjustment, separate validity timers, target

cell ephemeris information, epoch time of the ephemeris, common timing advance, validity timer information for target cell mobility, downlink and uplink polarization information, K_offset, and/or K_MAC (e.g., to determine UE-base station round trip time and perform RACH to a target cell). In some instances, the system information for satellite information reading may include one or more of a master information block (MIB), a system information block 1 (SIB1) or a SIBx. In some instances, reading, based on the triggering event occurring, the system information for satellite information may include the UE reading system information of a serving cell of the UE. In some instances, the system information of the serving cell of the UE may include system information for satellite information of neighbor cells or target cells.

[0244] In some instances, the network behavior may include a network periodically updating system information for satellite information. In such instances, to determine that the triggering event for system information for satellite information reading has occurred, the UE may determine that a period of time has elapsed since a previous reading of system information for satellite information reading. The period of time may be based, at least in part, on a periodicity of a network update of the system information for satellite information reading. The periodicity of the network update may be defined by 3GPP standards. In some instances, the period of time may be based, at least in part, on a scaled periodicity of a network update of the system information for satellite information reading. The scaled periodicity may be a product of a scaling factor and a periodicity of the network update. The scaling factor may be defined by 3GPP standards.

[0245] In some instances, the network behavior may include configuration of a measurement object to the UE. In such instances, to determine that the triggering event for system information for satellite information reading has occurred, the UE may determine to read the system information for satellite information to prepare for the measurement object.

[0246] In some instances, the network behavior may include configuration of a handover to the UE. In such instances, to determine that the triggering event for system information for satellite information reading has occurred, the UE may determine to read the system information for satellite information to prepare for the handover. In some instances, to read, based on the triggering event occurring, the system information for satellite information, the UE may read system information from a source serving cell for satellite information of target cell measurement for handover purposes.

[0247] In some instances, the UE behavior may include performance of radio resource control (RRC) re-establishment after radio link failure (RLF). In such instances, to determine that the

triggering event for system information for satellite information reading has occurred, the UE may determine to read the system information for satellite information of a target cell RRC re-establishment on the target cell.

[0248] In some instances, the UE behavior may include performance of serving cell or neighbor cell measurements. In such instances, to determine that the triggering event for system information for satellite information reading has occurred, the UE may determine to read the system information for satellite information prior to performing the serving cell or neighbor cell measurements.

[0249] In some instances, the UE behavior may include performance of a random access channel (RACH) transmission. In such instances, to determine that the triggering event for system information for satellite information reading has occurred, the UE may determine to read the system information for satellite information prior to performing the RACH transmission.

[0250] In some instances, the channel condition may include a serving cell signal quality dropping below a threshold. In such instances, to determine that the triggering event for system information for satellite information reading has occurred, the UE may determine that the serving cell signal quality is less than the threshold. In such instances, to read, based on the triggering event occurring, the system information for satellite information, the UE may read system information for satellite information of a serving cell to prepare for mobility measurements. The threshold may be defined by 3GPP standards or signaled by a network.

[0251] In some instances, the channel condition may include a serving cell signal strength dropping below a threshold. In such instances, to determine that the triggering event for system information for satellite information reading has occurred, the UE may determine that the serving cell signal strength is less than the threshold. In such instances, to read, based on the triggering event occurring, the system information for satellite information, the UE may read system information for satellite information of a serving cell to prepare for mobility measurements. The threshold may be defined by 3GPP standards or signaled by a network.

[0252] In some instances, the timing condition may include a configured mobility window during which the UE is allowed to perform mobility procedures. In such instances, to determine that the triggering event for system information for satellite information reading has occurred, the UE may determine that the configured mobility window has started but not ended. In such instances, to read, based on the triggering event occurring, the system information for satellite information, the UE may read system information for satellite information of a serving cell for target cell measurement for mobility procedures.

[0253] In some instances, the distance condition may include a distance between the UE and a serving cell exceeding a threshold. In such instances, to determine that the triggering event for system information for satellite information reading has occurred, the UE may determine that distance from the UE to the serving is greater than the threshold. The threshold may be defined by 3GPP standards or signaled by a network.

[0254] In some instances, the distance condition may include a distance between the UE and a target cell dropping below a threshold. In such instances, to determine that the triggering event for system information for satellite information reading has occurred, the UE may determine that distance from the UE to the target cell is less than the threshold. The threshold may be defined by 3GPP standards or signaled by a network.

[0255] In some instances, the network indication may be at least one of an explicit command or a periodicity for reading system information for satellite information. In some instances, the UE may receive the explicit command each time a network updates system information for satellite information.

[0256] Figure 15 illustrates a block diagram of an example of yet another method for mitigating a collision between receiving satellite information from a non-terrestrial network (NTN) and a measurement occasion, according to some embodiments. The method shown in Figure 15 may be used in conjunction with any of the systems, methods, or devices shown in the Figures, among other devices. In various embodiments, some of the method elements shown may be performed concurrently, in a different order than shown, or may be omitted. Additional method elements may also be performed as desired. As shown, this method may operate as follows.

[0257] At 1502, a UE, such as UE 106, may determine that a system information for satellite information reading occasion collides with a measurement occasion. The measurement occasion may be one of a layer 1 (L1) measurement occasion or a layer 3 (L3) measurement occasion.

[0258] At 1504, the UE may prioritize, based on determining that the measurement occasion is an L3 measurement occasion, the system information for satellite information reading occasion over the measurement occasion.

[0259] At 1506, the UE may skip the measurement occasion.

[0260] In some instances, the UE may prioritize, based on determining that the measurement occasion is an L1 measurement occasion, the measurement occasion over the system information for satellite information reading occasion and skip the system information for satellite information reading occasion.

[0261] In some instances, the UE may determine that a triggering event for system information for satellite information reading has occurred. The triggering event for system information for satellite information reading may include at least one of a network behavior, a UE behavior, a channel condition, a timing condition, a distance condition, or a network indication. The UE may read, based on the triggering event occurring, the system information for satellite information. The system information for satellite information reading may include at least ephemeris information. In some instances, the system information for satellite information reading may (additionally) include epoch time (e.g., a number of seconds that have elapsed since January 1, 1970, 12:00 am Greenwich Mean Time (GMT), not counting leap seconds) SMTCs (SSB (synchronization signal block) based measurement timing configuration), downlink polarization information, serving cell stop time and reference location for idle mode measurement trigger in non-geostationary orbit (NGSO) fixed cell (if applicable), feeder link delay (e.g., common timing advance and K_MAC (e.g., an indicator of a magnitude of unalignment between downlink and uplink frame timing on the network (e.g., base station) side) of the neighbor cell for neighbor cell SMTC adjustment, separate validity timers, target cell ephemeris information, epoch time of the ephemeris, common timing advance, validity timer information for target cell mobility, downlink and uplink polarization information, K_offset, and/or K_MAC (e.g., to determine UE-base station round trip time and perform RACH to a target cell). In some instances, the system information for satellite information reading may include one or more of a master information block (MIB), a system information block 1 (SIB1) or a SIBx. In some instances, reading, based on the triggering event occurring, the system information for satellite information may include the UE reading system information of a serving cell of the UE. In some instances, the system information of the serving cell of the UE may include system information for satellite information of neighbor cells or target cells.

[0262] In some instances, the network behavior may include a network periodically updating system information for satellite information. In such instances, to determine that the triggering event for system information for satellite information reading has occurred, the UE may determine that a period of time has elapsed since a previous reading of system information for satellite information reading. The period of time may be based, at least in part, on a periodicity of a network update of the system information for satellite information reading. The periodicity of the network update may be defined by 3GPP standards. In some instances, the period of time may be based, at least in part, on a scaled periodicity of a network update of the system information for satellite information reading. The scaled periodicity may be a product of a

scaling factor and a periodicity of the network update. The scaling factor may be defined by 3GPP standards.

[0263] In some instances, the network behavior may include configuration of a measurement object to the UE. In such instances, to determine that the triggering event for system information for satellite information reading has occurred, the UE may determine to read the system information for satellite information to prepare for the measurement object.

[0264] In some instances, the network behavior may include configuration of a handover to the UE. In such instances, to determine that the triggering event for system information for satellite information reading has occurred, the UE may determine to read the system information for satellite information to prepare for the handover. In some instances, to read, based on the triggering event occurring, the system information for satellite information, the UE may read system information from a source serving cell for satellite information of target cell measurement for handover purposes.

[0265] In some instances, the UE behavior may include performance of radio resource control (RRC) re-establishment after radio link failure (RLF). In such instances, to determine that the triggering event for system information for satellite information reading has occurred, the UE may determine to read the system information for satellite information of a target cell RRC re-establishment on the target cell.

[0266] In some instances, the UE behavior may include performance of serving cell or neighbor cell measurements. In such instances, to determine that the triggering event for system information for satellite information reading has occurred, the UE may determine to read the system information for satellite information prior to performing the serving cell or neighbor cell measurements.

[0267] In some instances, the UE behavior may include performance of a random access channel (RACH) transmission. In such instances, to determine that the triggering event for system information for satellite information reading has occurred, the UE may determine to read the system information for satellite information prior to performing the RACH transmission.

[0268] In some instances, the channel condition may include a serving cell signal quality dropping below a threshold. In such instances, to determine that the triggering event for system information for satellite information reading has occurred, the UE may determine that the serving cell signal quality is less than the threshold. In such instances, to read, based on the triggering event occurring, the system information for satellite information, the UE may read

system information for satellite information of a serving cell to prepare for mobility measurements. The threshold may be defined by 3GPP standards or signaled by a network.

[0269] In some instances, the channel condition may include a serving cell signal strength dropping below a threshold. In such instances, to determine that the triggering event for system information for satellite information reading has occurred, the UE may determine that the serving cell signal strength is less than the threshold. In such instances, to read, based on the triggering event occurring, the system information for satellite information, the UE may read system information for satellite information of a serving cell to prepare for mobility measurements. The threshold may be defined by 3GPP standards or signaled by a network.

[0270] In some instances, the timing condition may include a configured mobility window during which the UE is allowed to perform mobility procedures. In such instances, to determine that the triggering event for system information for satellite information reading has occurred, the UE may determine that the configured mobility window has started but not ended. In such instances, to read, based on the triggering event occurring, the system information for satellite information, the UE may read system information for satellite information of a serving cell for target cell measurement for mobility procedures.

[0271] In some instances, the distance condition may include a distance between the UE and a serving cell exceeding a threshold. In such instances, to determine that the triggering event for system information for satellite information reading has occurred, the UE may determine that distance from the UE to the serving is greater than the threshold. The threshold may be defined by 3GPP standards or signaled by a network.

[0272] In some instances, the distance condition may include a distance between the UE and a target cell dropping below a threshold. In such instances, to determine that the triggering event for system information for satellite information reading has occurred, the UE may determine that distance from the UE to the target cell is less than the threshold. The threshold may be defined by 3GPP standards or signaled by a network.

[0273] In some instances, the network indication may be at least one of an explicit command or a periodicity for reading system information for satellite information. In some instances, the UE may receive the explicit command each time a network updates system information for satellite information.

[0274] Figure 16 illustrates a block diagram of an example of yet a further method for mitigating a collision between receiving satellite information from a non-terrestrial network (NTN) and a measurement occasion, according to some embodiments. The method shown in Figure 16 may be used in conjunction with any of the systems, methods, or devices shown in

the Figures, among other devices. In various embodiments, some of the method elements shown may be performed concurrently, in a different order than shown, or may be omitted. Additional method elements may also be performed as desired. As shown, this method may operate as follows.

[0275] At 1602, a UE, such as UE 106, may determine that a system information for satellite information reading occasion collides with a measurement occasion. The measurement occasion may be one of a layer 1 (L1) measurement occasion or a layer 3 (L3) measurement occasion.

[0276] At 1604, the UE may prioritize, based on determining that the measurement occasion is an aperiodic measurement occasion, the measurement occasion over the system information for satellite information reading occasion.

[0277] At 1606, the UE may skip the system information for satellite information reading occasion.

[0278] In some instances, the UE may prioritize, based on determining that the measurement occasion is a periodic or semi-persistent measurement occasion, the system information for satellite information reading occasion over the measurement occasion and skip the measurement occasion.

[0279] In some instances, the UE may determine that a triggering event for system information for satellite information reading has occurred. The triggering event for system information for satellite information reading may include at least one of a network behavior, a UE behavior, a channel condition, a timing condition, a distance condition, or a network indication. The UE may read, based on the triggering event occurring, the system information for satellite information. The system information for satellite information reading may include at least ephemeris information. In some instances, the system information for satellite information reading may (additionally) include epoch time (e.g., a number of seconds that have elapsed since January 1, 1970, 12:00 am Greenwich Mean Time (GMT), not counting leap seconds) SMTCs (SSB (synchronization signal block) based measurement timing configuration), downlink polarization information, serving cell stop time and reference location for idle mode measurement trigger in non-geostationary orbit (NGSO) fixed cell (if applicable), feeder link delay (e.g., common timing advance and K_MAC (e.g., an indicator of a magnitude of unalignment between downlink and uplink frame timing on the network (e.g., base station) side) of the neighbor cell for neighbor cell SMTC adjustment, separate validity timers, target cell ephemeris information, epoch time of the ephemeris, common timing advance, validity timer information for target cell mobility, downlink and uplink polarization information,

K_offset, and/or K_MAC (e.g., to determine UE-base station round trip time and perform RACH to a target cell). In some instances, the system information for satellite information reading may include one or more of a master information block (MIB), a system information block 1 (SIB1) or a SIBx. In some instances, reading, based on the triggering event occurring, the system information for satellite information may include the UE reading system information of a serving cell of the UE. In some instances, the system information of the serving cell of the UE may include system information for satellite information of neighbor cells or target cells.

[0280] In some instances, the network behavior may include a network periodically updating system information for satellite information. In such instances, to determine that the triggering event for system information for satellite information reading has occurred, the UE may determine that a period of time has elapsed since a previous reading of system information for satellite information reading. The period of time may be based, at least in part, on a periodicity of a network update of the system information for satellite information reading. The periodicity of the network update may be defined by 3GPP standards. In some instances, the period of time may be based, at least in part, on a scaled periodicity of a network update of the system information for satellite information reading. The scaled periodicity may be a product of a scaling factor and a periodicity of the network update. The scaling factor may be defined by 3GPP standards.

[0281] In some instances, the network behavior may include configuration of a measurement object to the UE. In such instances, to determine that the triggering event for system information for satellite information reading has occurred, the UE may determine to read the system information for satellite information to prepare for the measurement object.

[0282] In some instances, the network behavior may include configuration of a handover to the UE. In such instances, to determine that the triggering event for system information for satellite information reading has occurred, the UE may determine to read the system information for satellite information to prepare for the handover. In some instances, to read, based on the triggering event occurring, the system information for satellite information, the UE may read system information from a source serving cell for satellite information of target cell measurement for handover purposes.

[0283] In some instances, the UE behavior may include performance of radio resource control (RRC) re-establishment after radio link failure (RLF). In such instances, to determine that the triggering event for system information for satellite information reading has occurred, the UE

may determine to read the system information for satellite information of a target cell RRC re-establishment on the target cell.

[0284] In some instances, the UE behavior may include performance of serving cell or neighbor cell measurements. In such instances, to determine that the triggering event for system information for satellite information reading has occurred, the UE may determine to read the system information for satellite information prior to performing the serving cell or neighbor cell measurements.

[0285] In some instances, the UE behavior may include performance of a random access channel (RACH) transmission. In such instances, to determine that the triggering event for system information for satellite information reading has occurred, the UE may determine to read the system information for satellite information prior to performing the RACH transmission.

[0286] In some instances, the channel condition may include a serving cell signal quality dropping below a threshold. In such instances, to determine that the triggering event for system information for satellite information reading has occurred, the UE may determine that the serving cell signal quality is less than the threshold. In such instances, to read, based on the triggering event occurring, the system information for satellite information, the UE may read system information for satellite information of a serving cell to prepare for mobility measurements. The threshold may be defined by 3GPP standards or signaled by a network.

[0287] In some instances, the channel condition may include a serving cell signal strength dropping below a threshold. In such instances, to determine that the triggering event for system information for satellite information reading has occurred, the UE may determine that the serving cell signal strength is less than the threshold. In such instances, to read, based on the triggering event occurring, the system information for satellite information, the UE may read system information for satellite information of a serving cell to prepare for mobility measurements. The threshold may be defined by 3GPP standards or signaled by a network.

[0288] In some instances, the timing condition may include a configured mobility window during which the UE is allowed to perform mobility procedures. In such instances, to determine that the triggering event for system information for satellite information reading has occurred, the UE may determine that the configured mobility window has started but not ended. In such instances, to read, based on the triggering event occurring, the system information for satellite information, the UE may read system information for satellite information of a serving cell for target cell measurement for mobility procedures.

[0289] In some instances, the distance condition may include a distance between the UE and a serving cell exceeding a threshold. In such instances, to determine that the triggering event for system information for satellite information reading has occurred, the UE may determine that distance from the UE to the serving is greater than the threshold. The threshold may be defined by 3GPP standards or signaled by a network.

[0290] In some instances, the distance condition may include a distance between the UE and a target cell dropping below a threshold. In such instances, to determine that the triggering event for system information for satellite information reading has occurred, the UE may determine that distance from the UE to the target cell is less than the threshold. The threshold may be defined by 3GPP standards or signaled by a network.

[0291] In some instances, the network indication may be at least one of an explicit command or a periodicity for reading system information for satellite information. In some instances, the UE may receive the explicit command each time a network updates system information for satellite information.

[0292] It is well understood that the use of personally identifiable information should follow privacy policies and practices that are generally recognized as meeting or exceeding industry or governmental requirements for maintaining the privacy of users. In particular, personally identifiable information data should be managed and handled so as to minimize risks of unintentional or unauthorized access or use, and the nature of authorized use should be clearly indicated to users.

[0293] Embodiments of the present disclosure may be realized in any of various forms. For example, some embodiments may be realized as a computer-implemented method, a computer-readable memory medium, or a computer system. Other embodiments may be realized using one or more custom-designed hardware devices such as ASICs. Still other embodiments may be realized using one or more programmable hardware elements such as FPGAs.

[0294] In some embodiments, a non-transitory computer-readable memory medium may be configured so that it stores program instructions and/or data, where the program instructions, if executed by a computer system, cause the computer system to perform a method, e.g., any of the method embodiments described herein, or, any combination of the method embodiments described herein, or, any subset of any of the method embodiments described herein, or, any combination of such subsets.

[0295] In some embodiments, a device (e.g., a UE 106) may be configured to include a processor (or a set of processors) and a memory medium, where the memory medium stores program instructions, where the processor is configured to read and execute the program instructions from the memory medium, where the program instructions are executable to implement any of the various method embodiments described herein (or, any combination of the method embodiments described herein, or, any subset of any of the method embodiments described herein, or, any combination of such subsets). The device may be realized in any of various forms.

[0296] Any of the methods described herein for operating a user equipment (UE) may be the basis of a corresponding method for operating a base station, by interpreting each message/signal X received by the UE in the downlink as message/signal X transmitted by the base station, and each message/signal Y transmitted in the uplink by the UE as a message/signal Y received by the base station.

[0297] Although the embodiments above have been described in considerable detail, numerous variations and modifications will become apparent to those skilled in the art once the above disclosure is fully appreciated. It is intended that the following claims be interpreted to embrace all such variations and modifications.

CLAIMS

What is claimed is:

1. A method for receiving satellite information from a non-terrestrial network (NTN), comprising:

a user equipment device (UE),

determining that a triggering event for system information for satellite information reading has occurred, wherein the triggering event for system information for satellite information reading includes at least one of a network behavior, a UE behavior, a channel condition, a timing condition, a distance condition, or a network indication; and

reading, based on the triggering event occurring, the system information for satellite information.

2. The method of claim 1,

wherein the system information for satellite information reading includes one or more of a master information block (MIB), a system information block 1 (SIB1) or a SIBx;

wherein the system information for satellite information reading includes at least ephemeris information; and

wherein reading, based on the triggering event occurring, the system information for satellite information includes the UE reading system information of a serving cell of the UE.

3. The method of claim 2,

wherein the system information of the serving cell of the UE includes system information for satellite information of neighbor cells or target cells.

4. The method of any of claims 1 to 3,

wherein the network behavior includes a network periodically updating system information for satellite information; and

wherein determining that the triggering event for system information for satellite information reading has occurred includes the UE determining that a period of time has elapsed since a previous reading of system information for satellite information reading.

5. The method of claim 4,

wherein the period of time is based, at least in part, on a scaled periodicity of a network update of the system information for satellite information reading; and

wherein the scaled periodicity is a product of a scaling factor and a periodicity of the network update.

6. The method of any of claims 1 to 5,

wherein the network behavior includes configuration of a measurement object to the UE; and

wherein determining that the triggering event for system information for satellite information reading has occurred includes the UE determining to read the system information for satellite information to prepare for the measurement object.

7. The method of any of claims 1 to 6,

wherein the network behavior includes configuration of a handover to the UE; and

wherein determining that the triggering event for system information for satellite information reading has occurred includes the UE determining to read the system information for satellite information to prepare for the handover.

8. The method of claim 7,

wherein reading, based on the triggering event occurring, the system information for satellite information includes the UE reading system information from a source serving cell for satellite information of target cell measurement for handover purposes.

9. The method of any of claims 1 to 8,

wherein the UE behavior includes performance of radio resource control (RRC) re-establishment after radio link failure (RLF); and

wherein determining that the triggering event for system information for satellite information reading has occurred includes the UE determining to read the system information for satellite information of a target cell RRC re-establishment on the target cell.

10. The method of any of claims 1 to 9,

wherein the UE behavior includes performance of serving cell or neighbor cell measurements; and

wherein determining that the triggering event for system information for satellite information reading has occurred includes the UE determining to read the system information for satellite information prior to performing the serving cell or neighbor cell measurements.

11. The method of any of claims 1 to 10,

wherein the UE behavior includes performance of a random access channel (RACH) transmission: and

wherein determining that the triggering event for system information for satellite information reading has occurred includes the UE determining to read the system information for satellite information prior to performing the RACH transmission.

12. The method of any of claims 1 to 11,

wherein the channel condition includes a serving cell signal condition dropping below a threshold, wherein the signal condition is one of a signal quality or signal strength; and

wherein determining that the triggering event for system information for satellite information reading has occurred includes the UE determining that the serving cell signal condition is less than the threshold.

13. The method of claim 12,

wherein reading, based on the triggering event occurring, the system information for satellite information includes the UE reading system information for satellite information of a serving cell to prepare for mobility measurements.

14. The method of any of claims 1 to 13,

wherein the timing condition includes a configured mobility window during which the UE is allowed to perform mobility procedures; and

wherein determining that the triggering event for system information for satellite information reading has occurred includes the UE determining that the configured mobility window has started but not ended.

15. The method of claim 14,

wherein reading, based on the triggering event occurring, the system information for satellite information includes the UE reading system information for satellite information of a serving cell for target cell measurement for mobility procedures.

16. The method of any of claims 1 to 15,

wherein the distance condition includes at least one of a distance between the UE and a serving cell exceeding a first threshold or a distance between the UE and a target cell dropping below a second threshold; and

wherein determining that the triggering event for system information for satellite information reading has occurred includes the UE determining that at least one of a distance from the UE to the serving is greater than the first threshold or a distance from the UE to the target cell is less than the second threshold.

17. The method of any of claims 1 to 16, further comprising:

the UE,

determining that a system information for satellite information reading occasion collides with receiving a data channel or control channel from a serving cell;

prioritizing the system information for satellite information reading occasion over receiving the data channel; and

dropping reception of the data channel.

18. The method claim 17, further comprising:

the UE,

prioritizing the system information for satellite information reading occasion over receiving the control channel; and

dropping reception of the control channel.

19. The method of claim 17, further comprising:

the UE,

prioritizing receiving the control channel over the system information for satellite information reading occasion; and

skipping the system information for satellite information reading occasion.

20. The method of any of claims 1 to 19, further comprising:

the UE,

determining that a system information for satellite information reading occasion collides with uplink transmission;

prioritizing the system information for satellite information reading occasion over the uplink transmission; and

skipping the uplink transmission.

21. The method of any of claims 1 to 19, further comprising:

the UE,

determining that a system information for satellite information reading occasion collides with uplink transmission;

prioritizing the uplink transmission over the system information for satellite information reading occasion; and

skipping the system information for satellite information reading occasion.

22. The method of any of claims 1 to 19, further comprising:

the UE,

determining that a system information for satellite information reading occasion collides with uplink transmission;

prioritizing, based on determining that the uplink transmission is an aperiodic uplink transmission, the uplink transmission over the system information for satellite information reading occasion; and

skipping the system information for satellite information reading occasion.

23. The method of claim 22, further comprising:

the UE,

prioritizing, based on determining that the uplink transmission is an periodic or semi-persistent uplink transmission, the system information for satellite information reading occasion over the uplink transmission; and

skipping the uplink transmission.

24. The method of any of claims 1 to 23, further comprising:

the UE,

determining that a system information for satellite information reading occasion collides with a measurement occasion, wherein the measurement occasion is one of a layer 1 (L1) measurement occasion or a layer 3 (L3) measurement occasion;

prioritizing the system information for satellite information reading occasion over the measurement occasion; and

skipping the measurement occasion.

25. The method of any of claims 1 to 23, further comprising:

the UE,

determining that a system information for satellite information reading occasion collides with a measurement occasion, wherein the measurement occasion is one of a layer 1 (L1) measurement occasion or a layer 3 (L3) measurement occasion;

prioritizing the measurement occasion over the system information for satellite information reading occasion; and

skipping the system information for satellite information reading occasion.

26. The method of any of claims 1 to 25, further comprising:

the UE,

determining that a system information for satellite information reading occasion collides with a measurement occasion, wherein the measurement occasion is one of a layer 1 (L1) measurement occasion or a layer 3 (L3) measurement occasion;

prioritizing, based on determining that the measurement occasion is an aperiodic measurement occasion, the measurement occasion over the system information for satellite information reading occasion; and

skipping the system information for satellite information reading occasion.

27. The method of claim 26, further comprising:

the UE,

prioritizing, based on determining that the measurement occasion is an periodic or semi-persistent measurement occasion, the system information for satellite information reading occasion over the measurement occasion; and

skipping the measurement occasion.

28. A computer program product, comprising computer instructions which, when executed by one or more processors, perform steps of the method of any of claims 1 to 27.

29. A user equipment device (UE), comprising:

one or more processors; and

a memory having instructions stored thereon, which when executed by the one or more processors, perform steps of the method of any of claims 1 to 27.

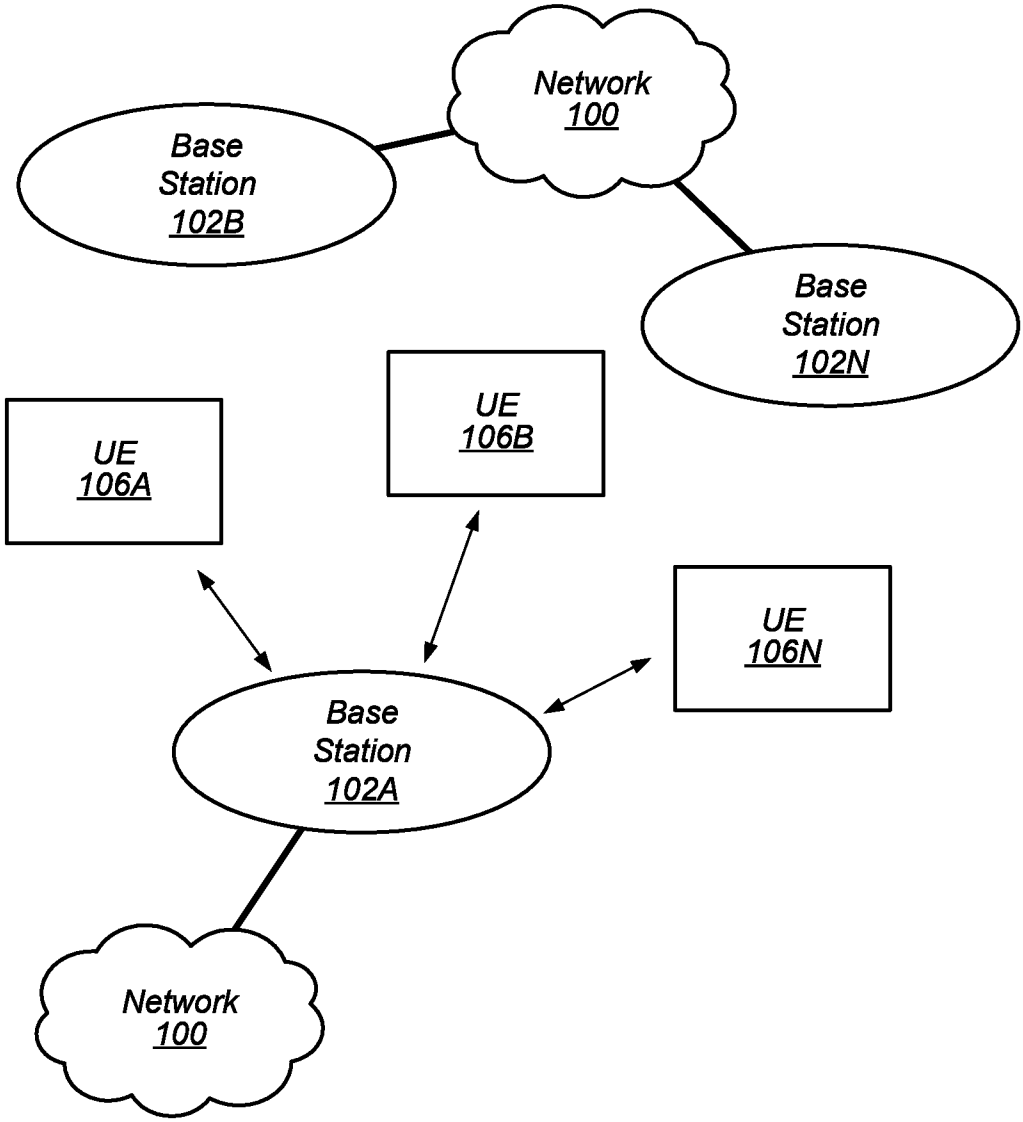
Network
100
Base
Station
102B
Base
Station
102N
UE
106B
UE
106A
UE
106N
Base
Station
102A
Network
100

FIG. 1A

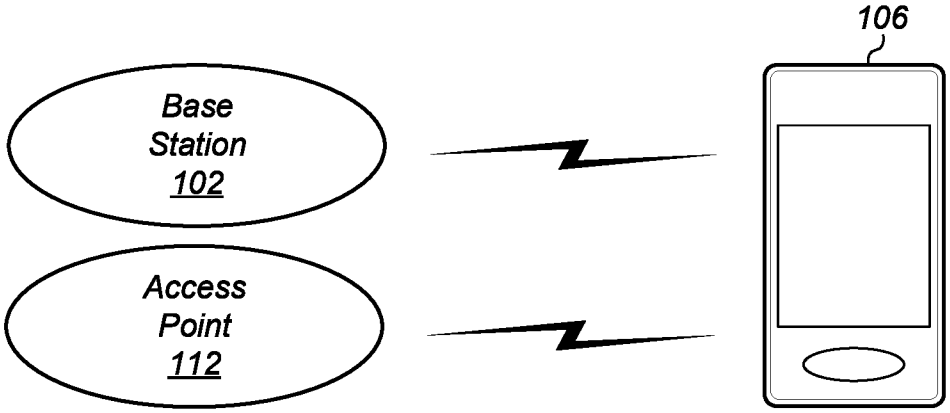
106
Base
Station
102
Access
Point
112

FIG. 1B

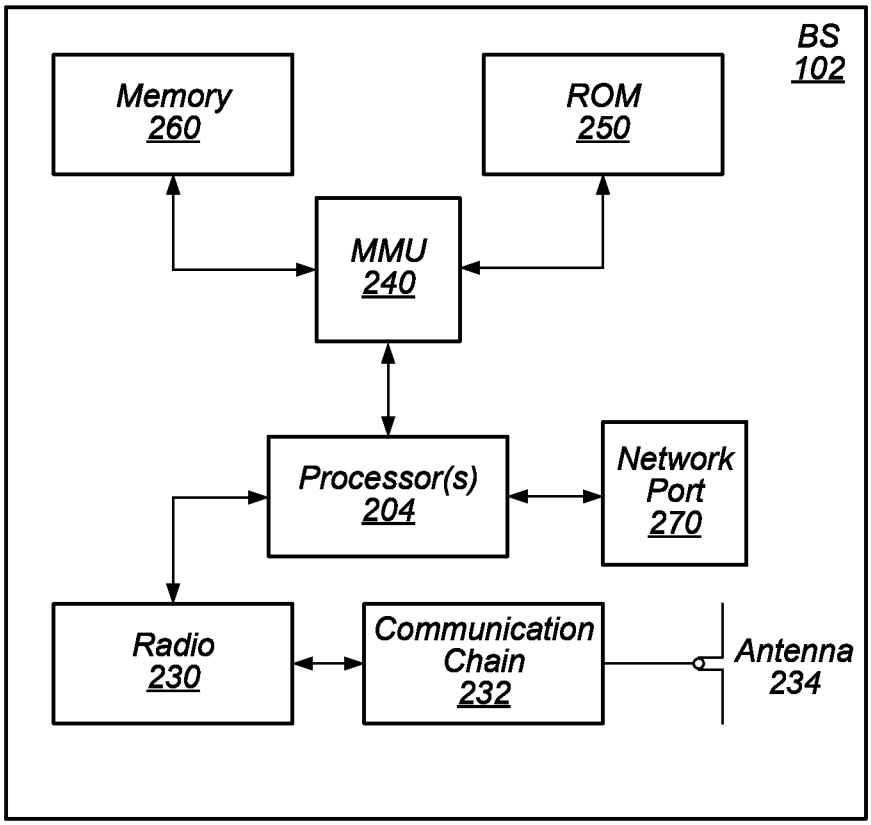
BS
102
Memory
260
ROM
250
MMU
240
Processor(s)
204
Network
Port
270
Radio
230
Communication
Chain
232
Antenna
234

FIG. 2

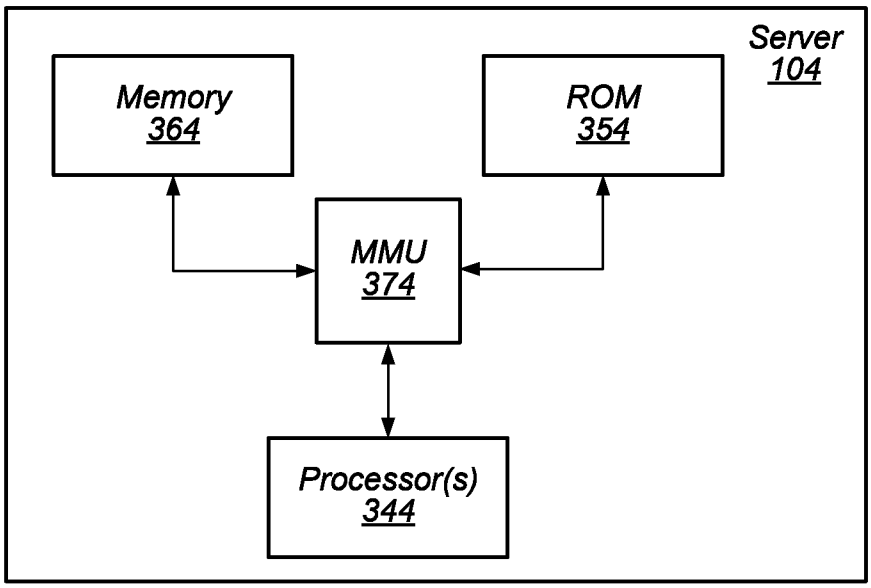
Server
104
Memory
364
ROM
354
MMU
374
Processor(s)
344

FIG. 3

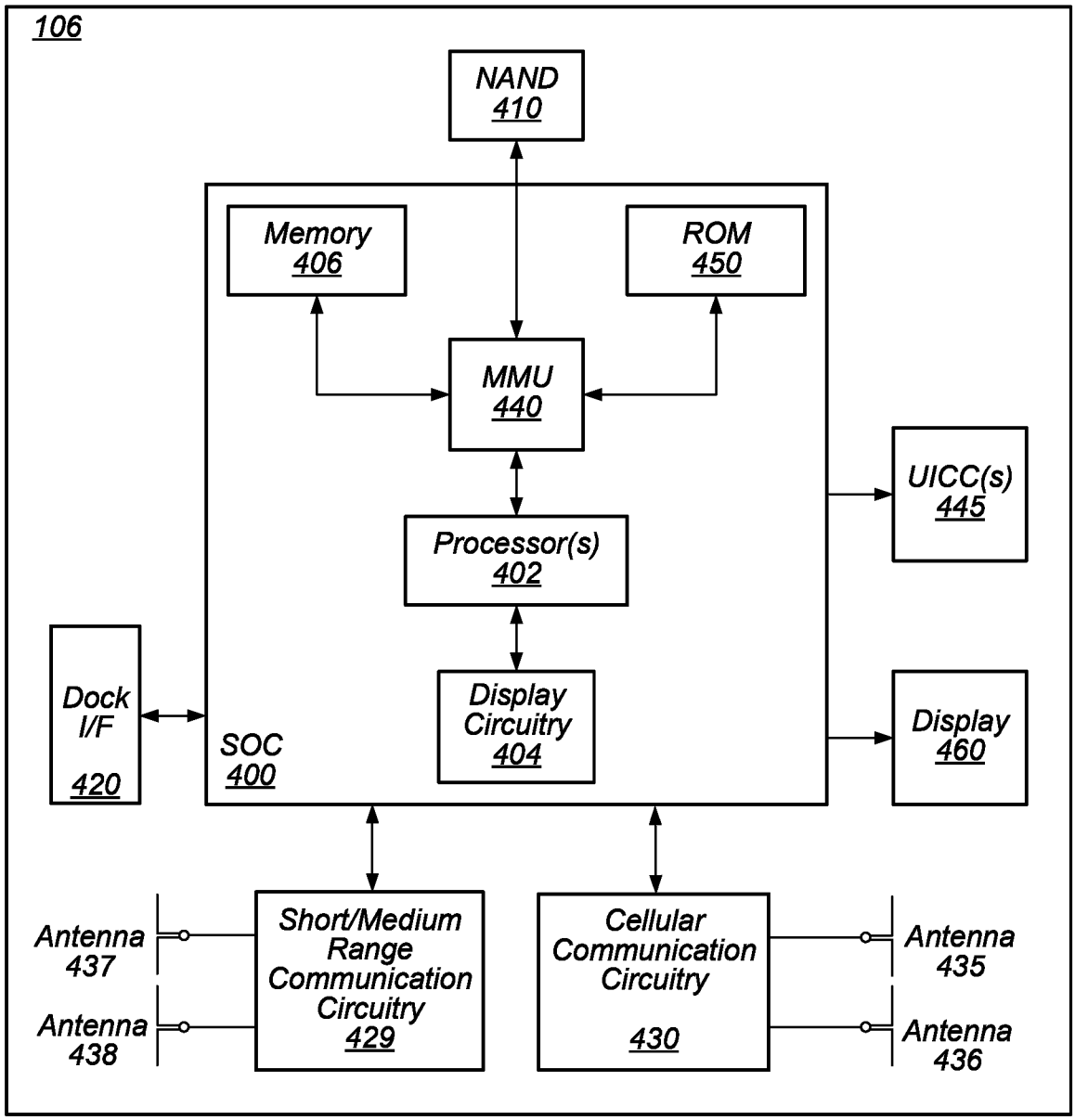
106
NAND
410
Memory
406
ROM
450
MMU
440
Processor(s)
402
UICC(s)
445
Dock
I/F
420
SOC
400
Display
Circuitry
404
Display
460
Antenna
437
Antenna
438
Short/Medium
Range
Communication
Circuitry
429
Cellular
Communication
Circuitry
430
Antenna
435
Antenna
436

FIG. 4

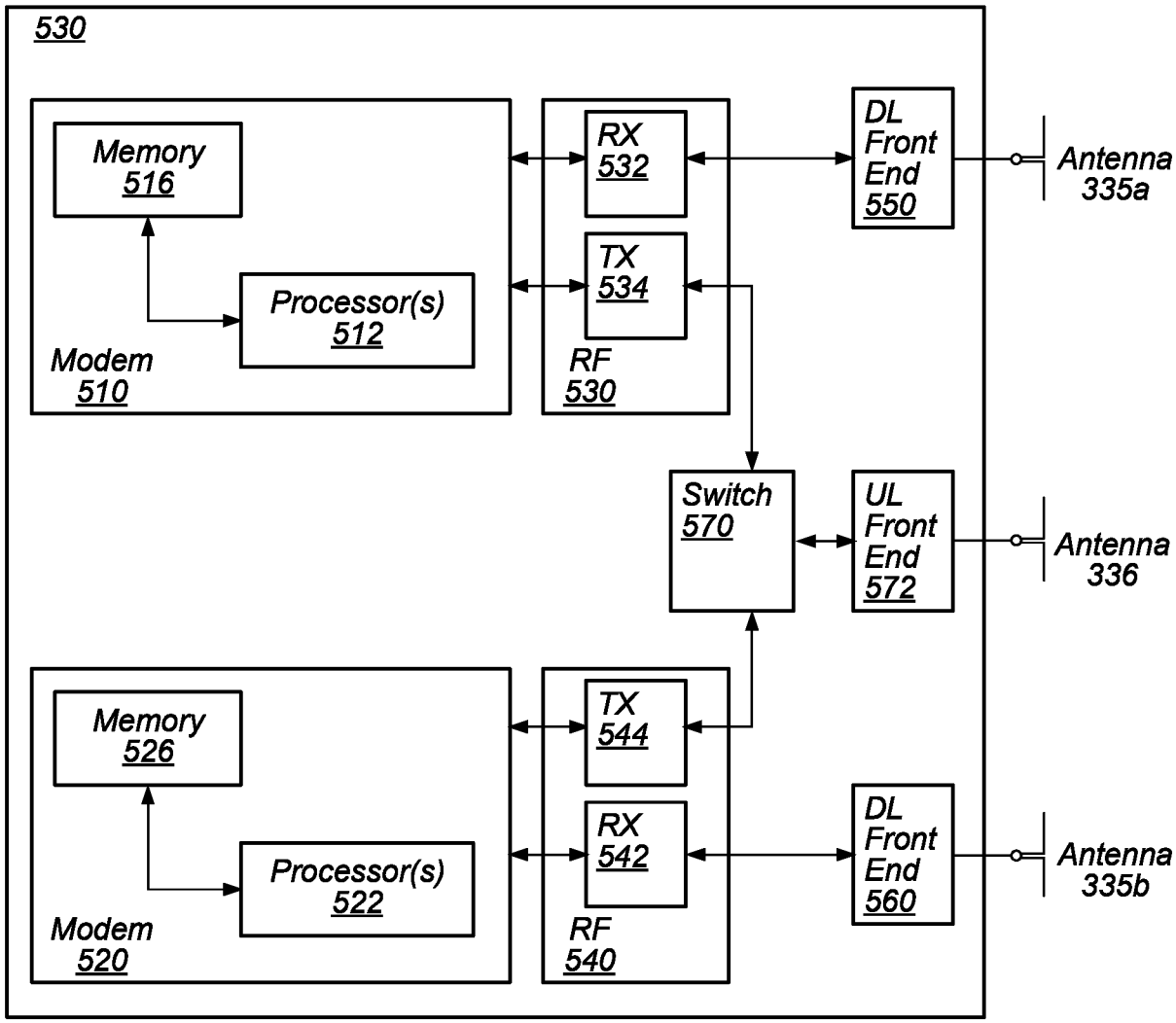
530
Memory
516
Processor(s)
512
Modem
510
RX
532
TX
534
RF
530
DL
Front
End
550
Antenna
335a
Switch
570
UL
Front
End
572
Antenna
336
Memory
526
Processor(s)
522
Modem
520
TX
544
RX
542
RF
540
DL
Front
End
560
Antenna
335b

FIG. 5

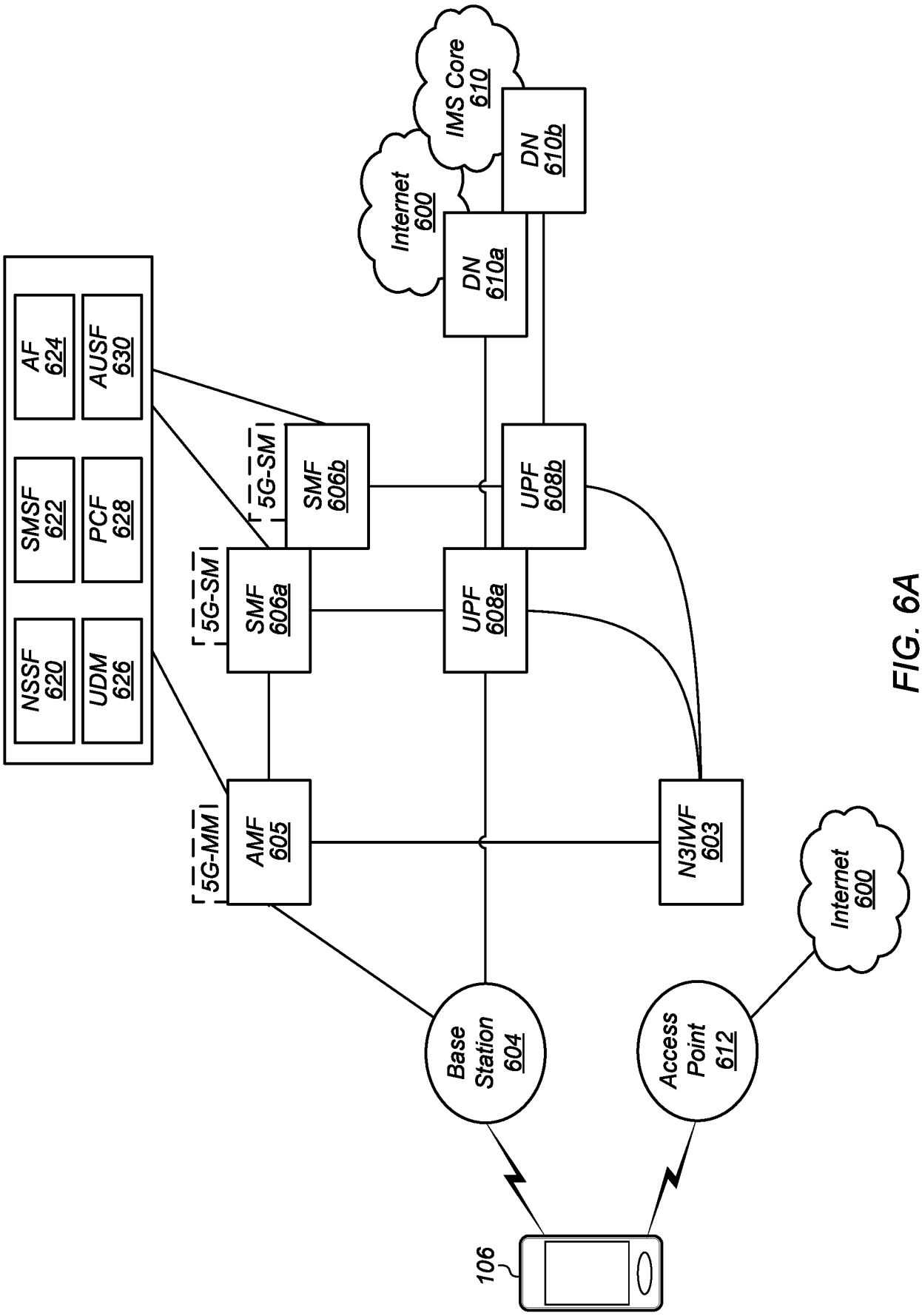
IMS Core 610
Internet 600
DN 610b
DN 610a
AF 624
AUSF 630
SMSF 622
PCF 628
NSSF 620
UDM 626
5G-SM
SMF 606b
UPF 608b
5G-SM
SMF 606a
UPF 608a
5G-MM
AMF 605
N3IWF 603
Internet 600
Base Station 604
Access Point 612
106

FIG. 6A

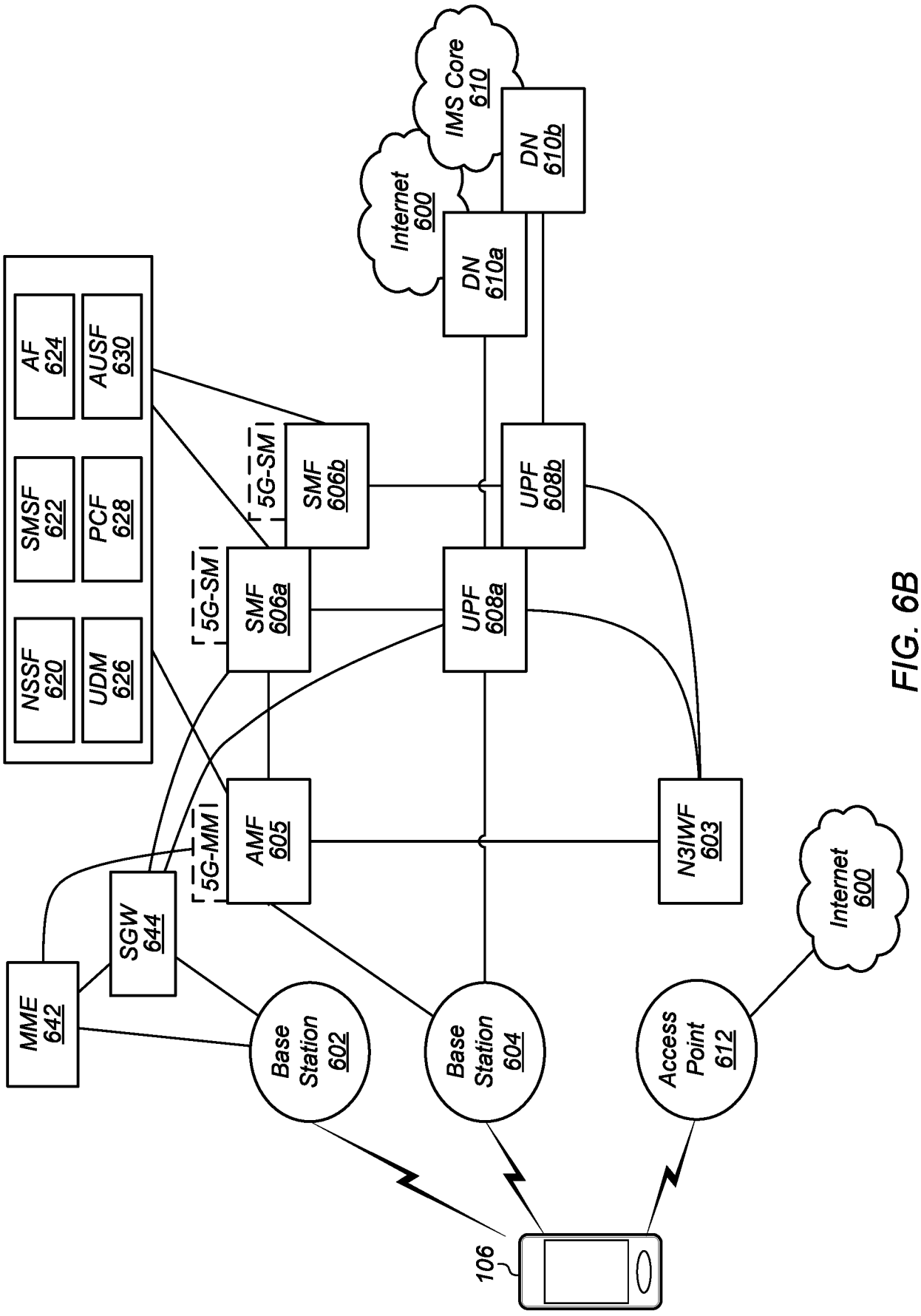
IMS Core 610
Internet 600
DN 610b
DN 610a
AF 624
AUSF 630
SMSF 622
PCF 628
NSSF 620
UDM 626
5G-SM
SMF 606b
UPF 608b
5G-SM
SMF 606a
UPF 608a
5G-MM
AMF 605
N3IWF 603
Internet 600
SGW 644
MME 642
Base Station 602
Base Station 604
Access Point 612
106

FIG. 6B

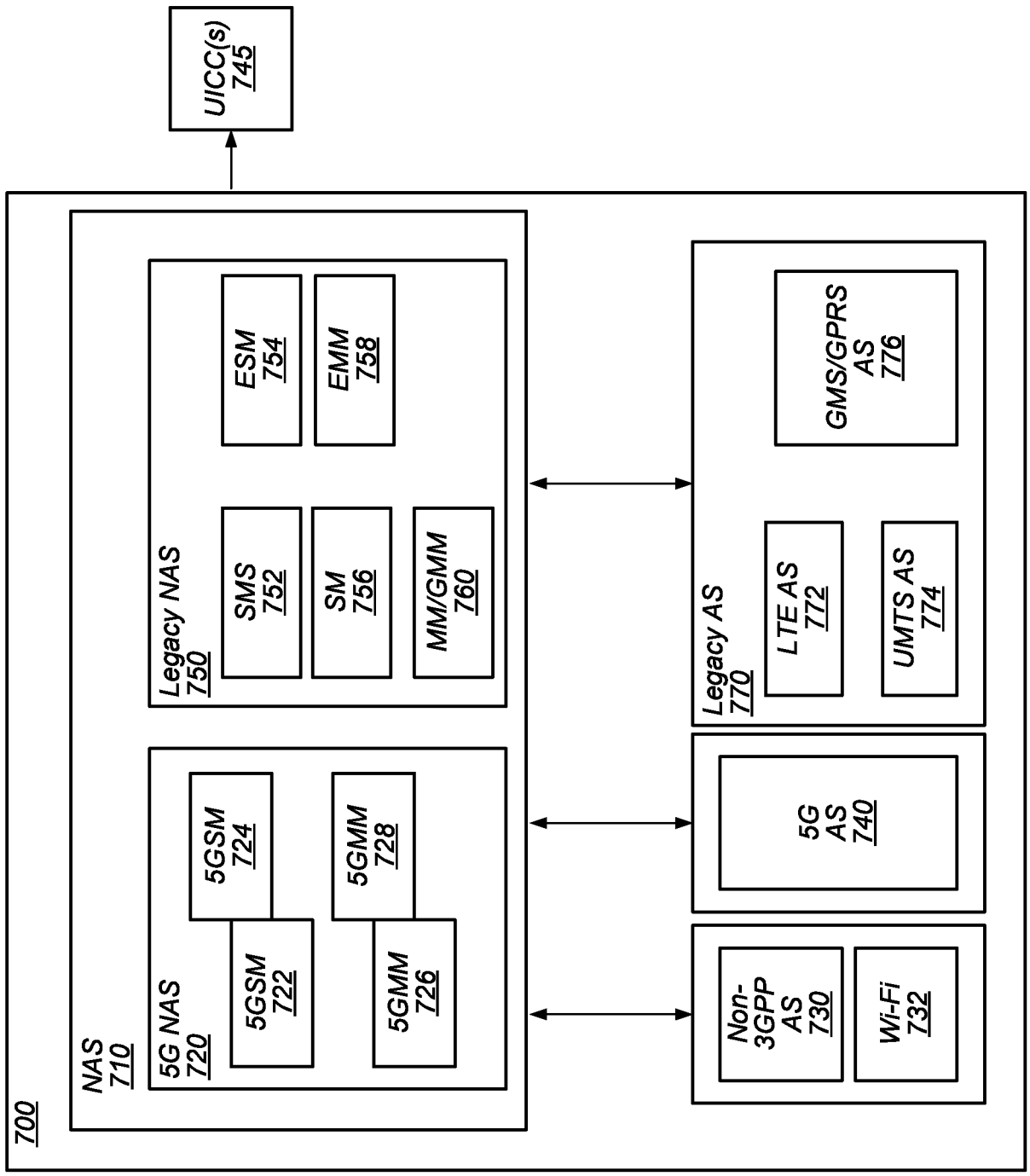
UICC(s)
745
700
NAS
710
5G NAS
720
5GSM
722
5GSM
724
5GMM
726
5GMM
728
Legacy NAS
750
SMS
752
SM
756
MM/GMM
760
ESM
754
EMM
758
Legacy AS
770
LTE AS
772
UMTS AS
774
GMS/GPRS
AS
776
5G
AS
740
Non-
3GPP
AS
730
Wi-Fi
732

FIG. 7

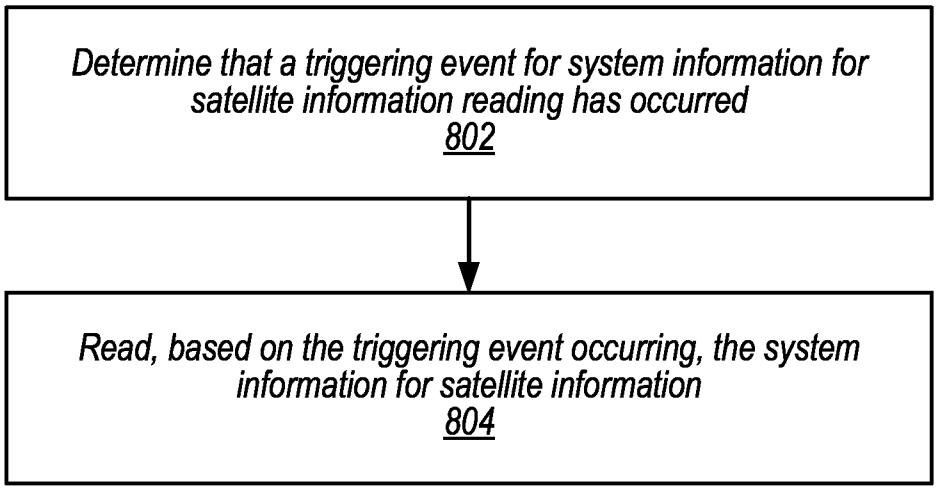
Determine that a triggering event for system information for satellite information reading has occurred
802
Read, based on the triggering event occurring, the system information for satellite information
804

FIG. 8

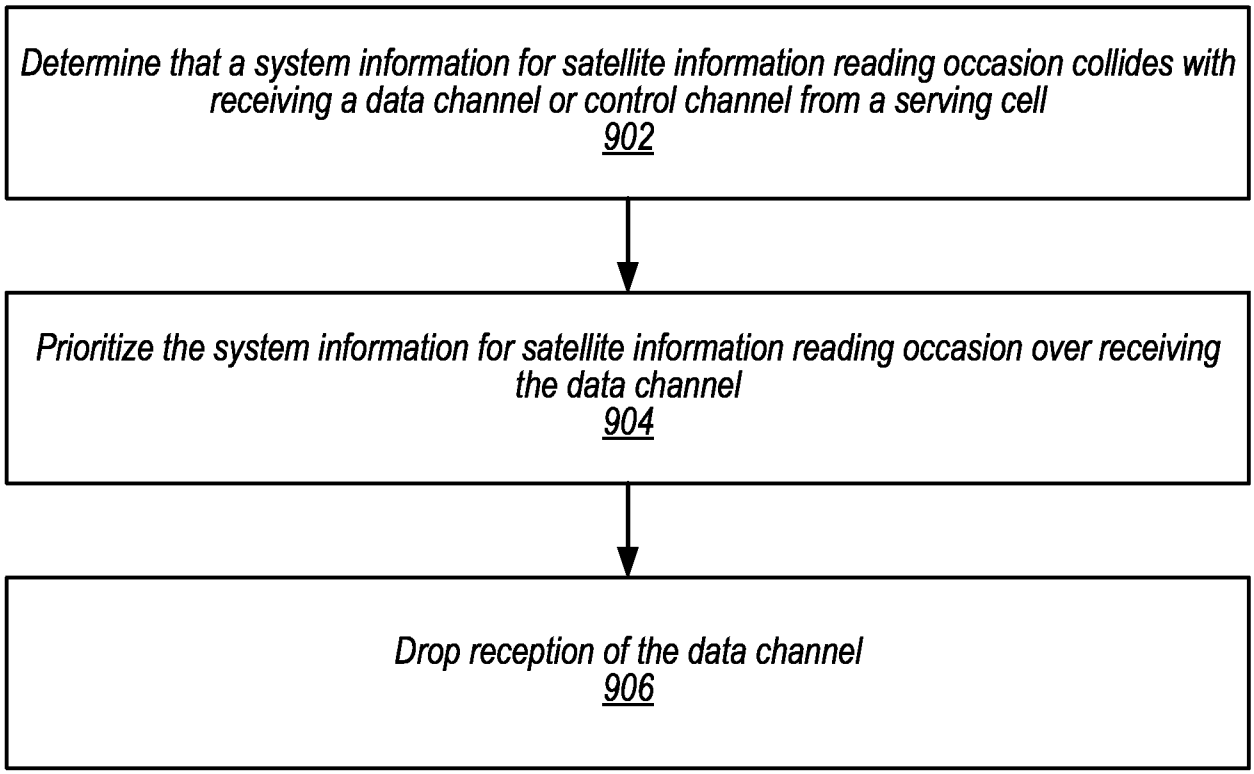
Determine that a system information for satellite information reading occasion collides with receiving a data channel or control channel from a serving cell
902
Prioritize the system information for satellite information reading occasion over receiving the data channel
904
Drop reception of the data channel
906

FIG. 9

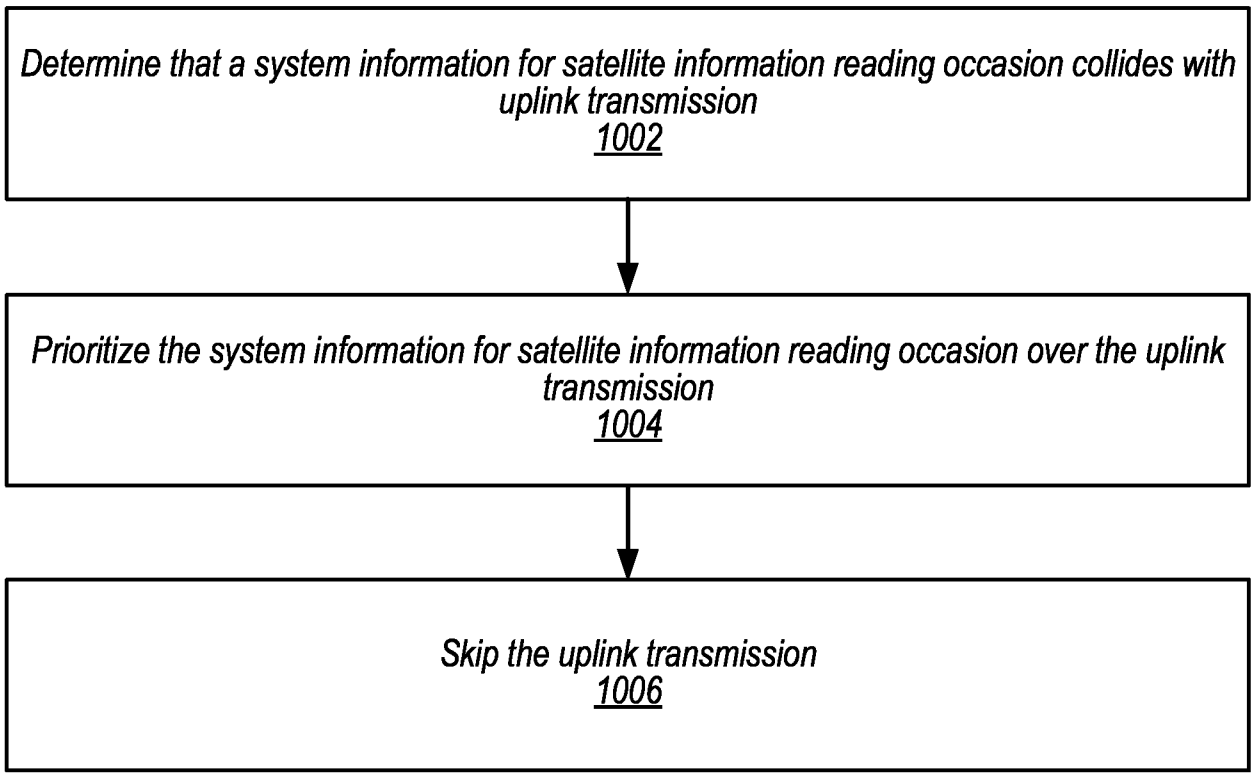
Determine that a system information for satellite information reading occasion collides with uplink transmission
1002
Prioritize the system information for satellite information reading occasion over the uplink transmission
1004
Skip the uplink transmission
1006

FIG. 10

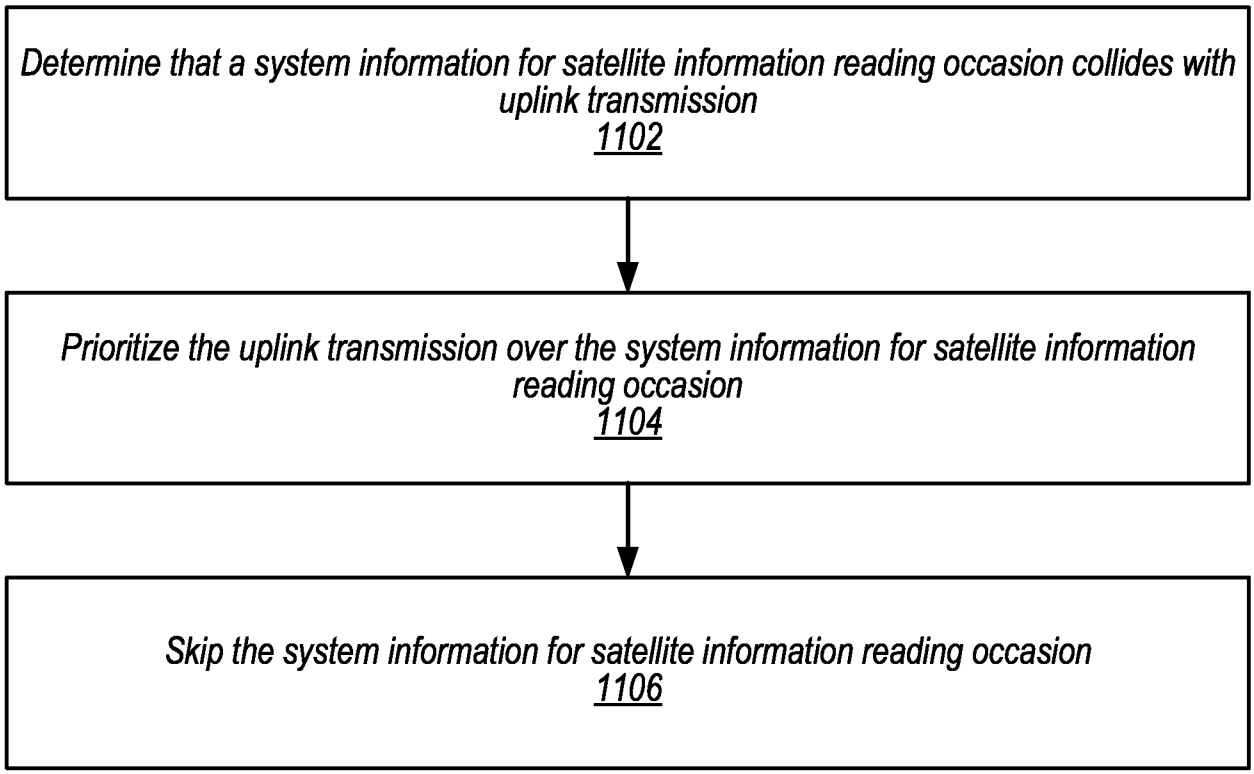
Determine that a system information for satellite information reading occasion collides with uplink transmission
1102
Prioritize the uplink transmission over the system information for satellite information reading occasion
1104
Skip the system information for satellite information reading occasion
1106

FIG. 11

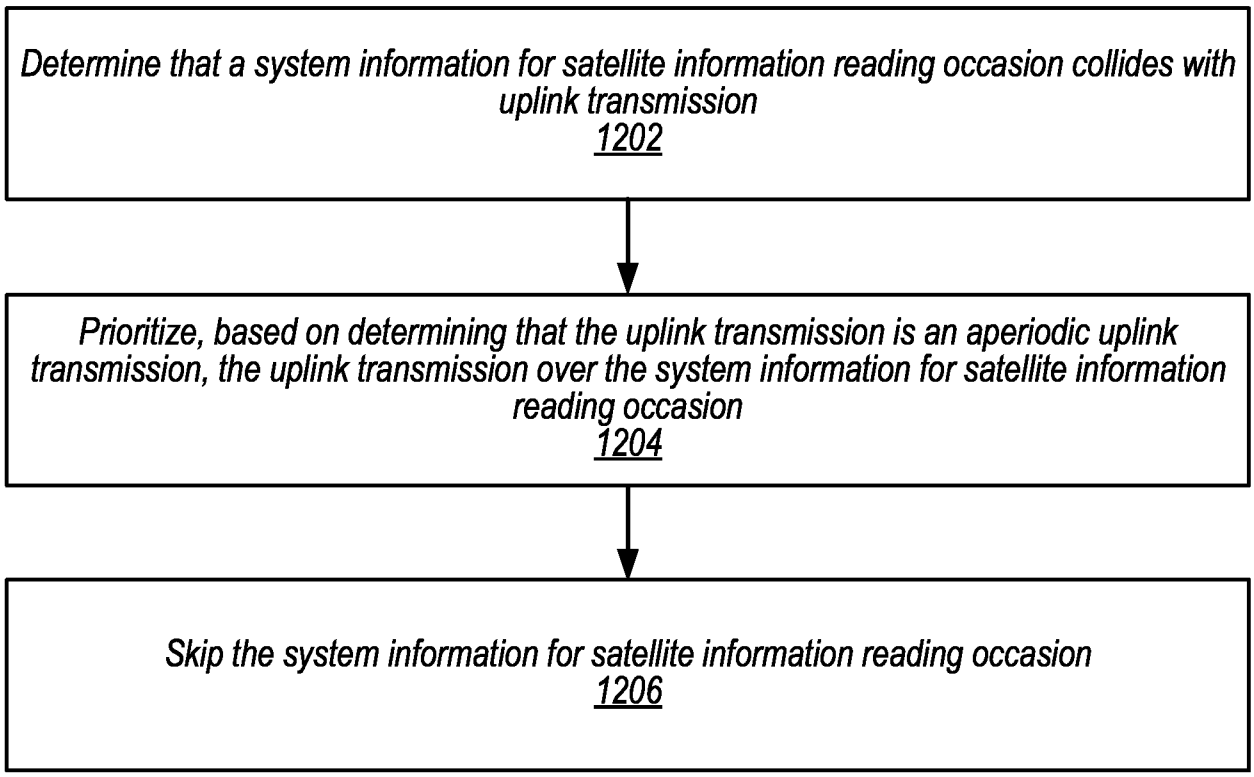
Determine that a system information for satellite information reading occasion collides with uplink transmission
1202
Prioritize, based on determining that the uplink transmission is an aperiodic uplink transmission, the uplink transmission over the system information for satellite information reading occasion
1204
Skip the system information for satellite information reading occasion
1206

FIG. 12

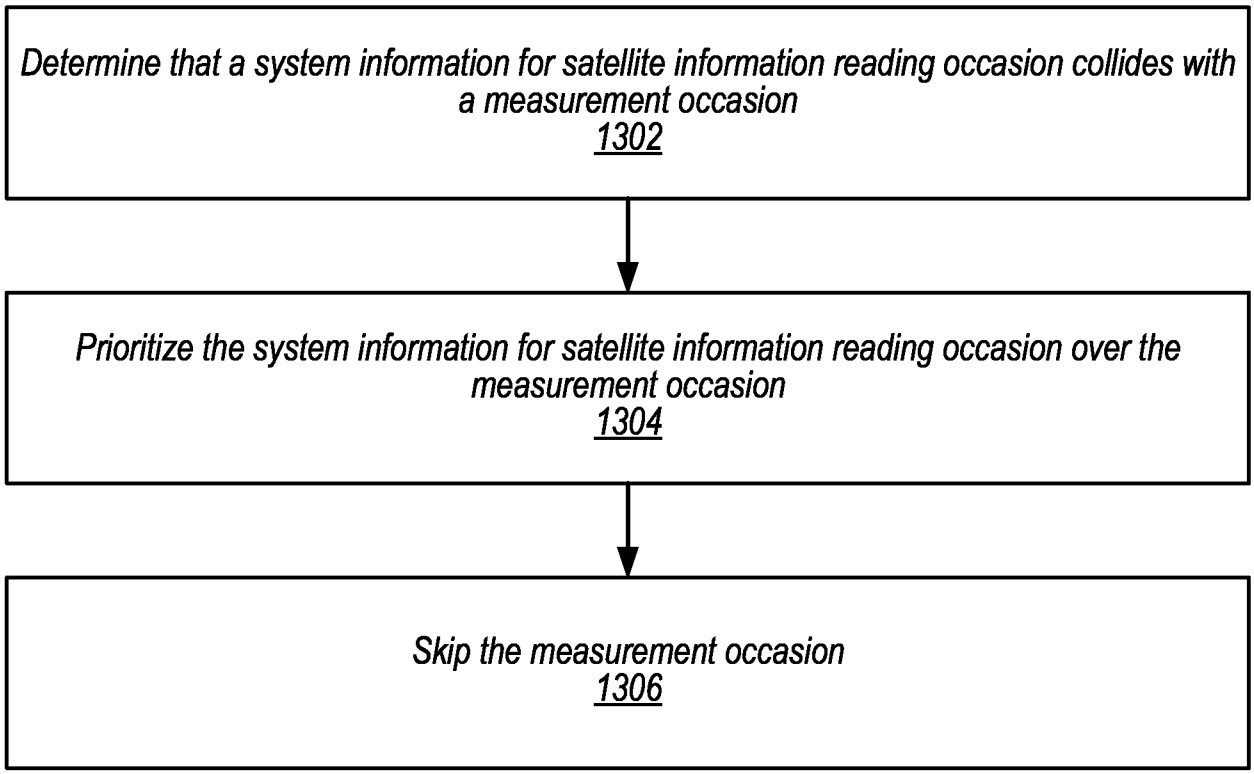
Determine that a system information for satellite information reading occasion collides with a measurement occasion
1302
Prioritize the system information for satellite information reading occasion over the measurement occasion
1304
Skip the measurement occasion
1306

FIG. 13

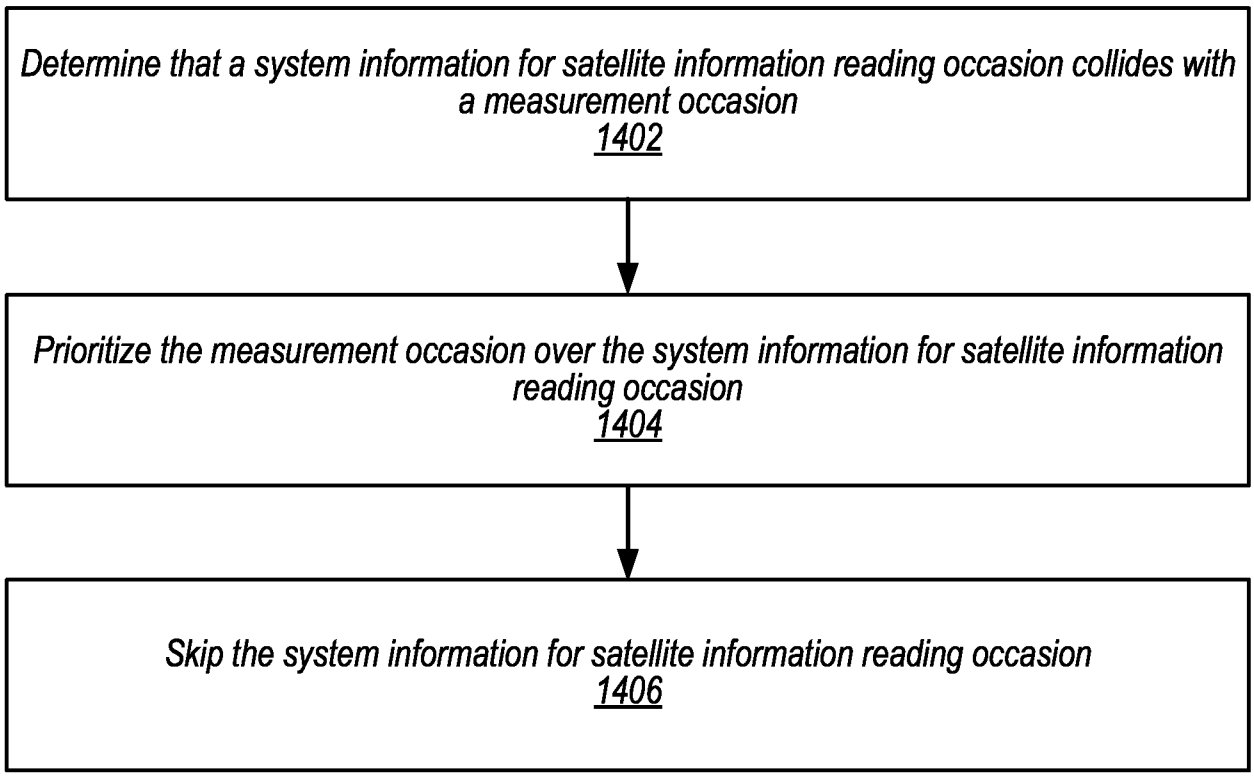
Determine that a system information for satellite information reading occasion collides with a measurement occasion
1402
Prioritize the measurement occasion over the system information for satellite information reading occasion
1404
Skip the system information for satellite information reading occasion
1406

FIG. 14

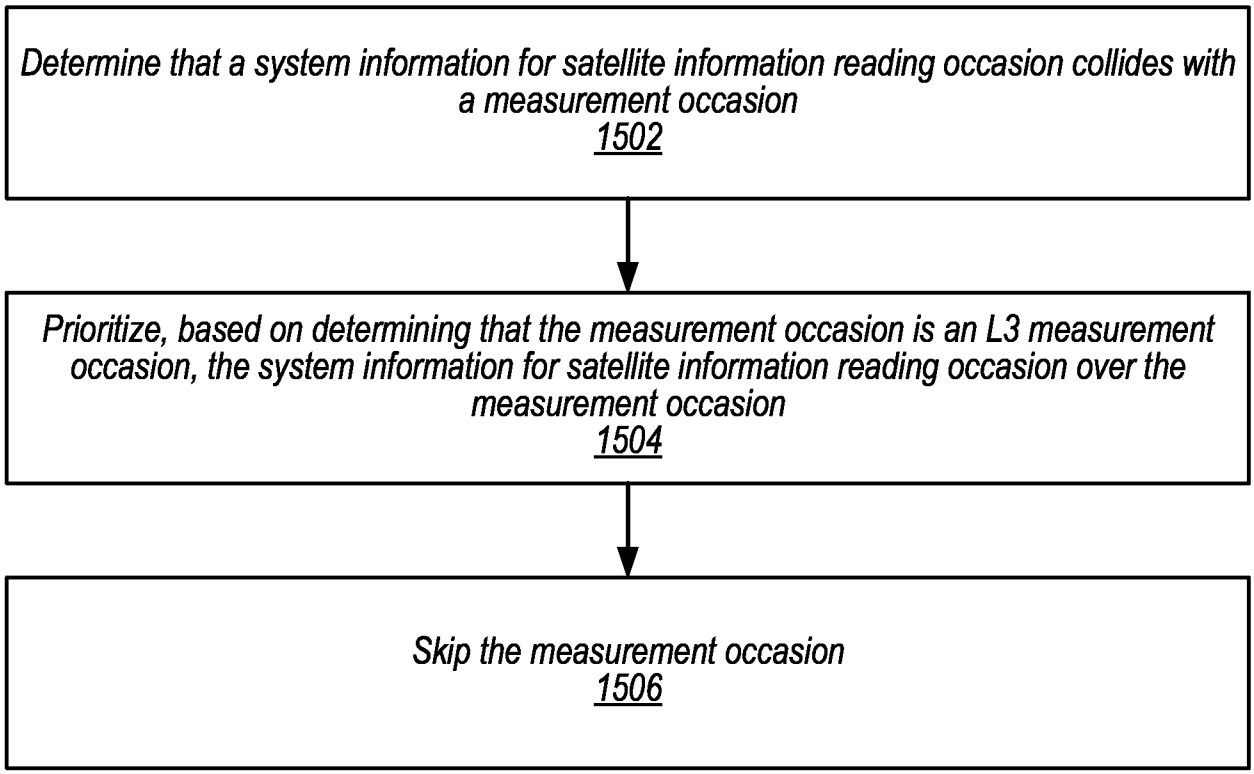
Determine that a system information for satellite information reading occasion collides with a measurement occasion
1502
Prioritize, based on determining that the measurement occasion is an L3 measurement occasion, the system information for satellite information reading occasion over the measurement occasion
1504
Skip the measurement occasion
1506

FIG. 15

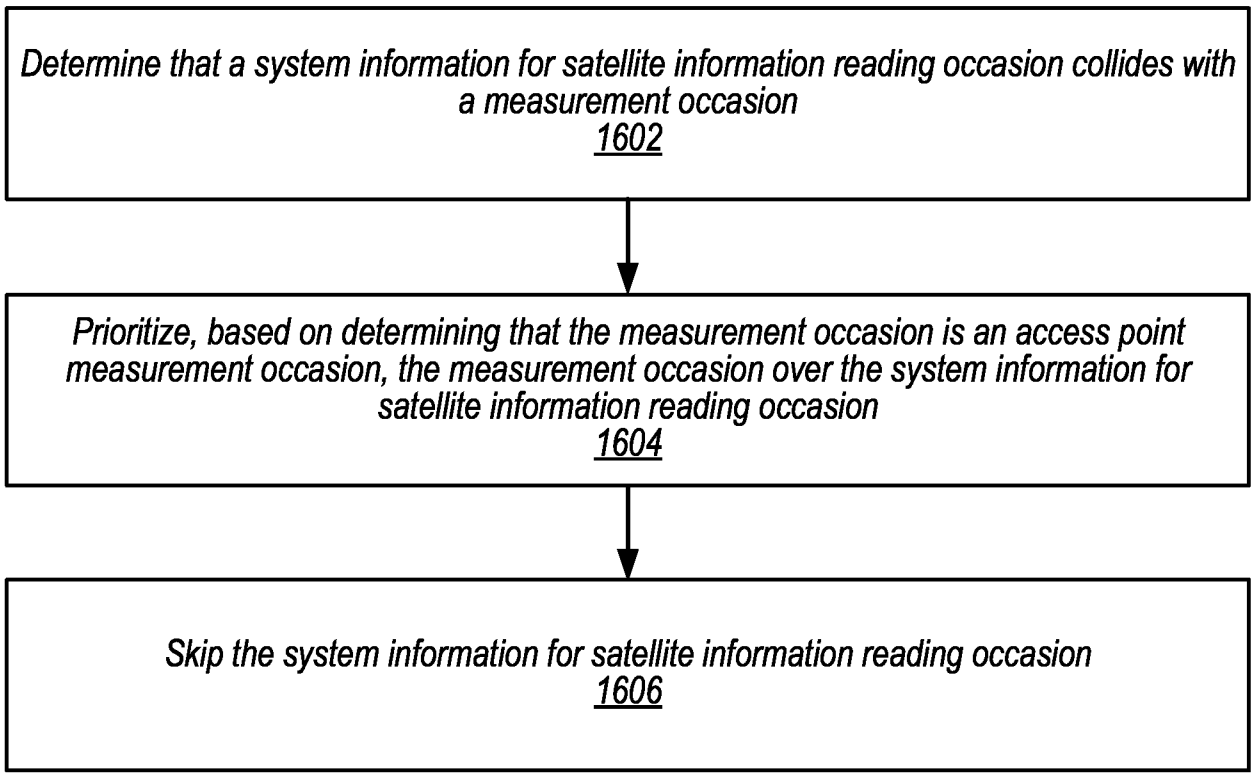
Determine that a system information for satellite information reading occasion collides with a measurement occasion
1602
Prioritize, based on determining that the measurement occasion is an access point measurement occasion, the measurement occasion over the system information for satellite information reading occasion
1604
Skip the system information for satellite information reading occasion
1606

FIG. 16

INTERNATIONAL SEARCH REPORT

International application No.
PCT/CN2022/088383

A. CLASSIFICATION OF SUBJECT MATTER

H04W 56/00(2009.01)i

According to International Patent Classification (IPC) or to both national classification and IPC

B. FIELDS SEARCHED

Minimum documentation searched (classification system followed by classification symbols)

H04W

Documentation searched other than minimum documentation to the extent that such documents are included in the fields searched

Electronic data base consulted during the international search (name of data base and, where practicable, search terms used)

CNPAT, CNKI, WPI, EPODOC, 3GPP: non-terrestrial network, NTN, triggering, system information, satellite, reading, receiving, network behavior, UE behavior, channel condition, timing, distance, indication

C. DOCUMENTS CONSIDERED TO BE RELEVANT

Category*	Citation of document, with indication, where appropriate, of the relevant passages	Relevant to claim No.
X	WO 2022067718 A1 (ZTE CORPORATION) 07 April 2022 (2022-04-07) claims 1-25	1-29
A	CN 112911699 A (ZHEJIANG LAB) 04 June 2021 (2021-06-04) the whole document	1-29
A	CN 111294801 A (ZTE CORPORATION) 16 June 2020 (2020-06-16) the whole document	1-29
A	CATT. "Measurement Initiation Issue for NTN System" *3GPP TSG-RAN WG2 Meeting #108, R2-1914495,* Vol. , No. , 22 November 2019 (2019-11-22), ISSN: , the whole document	1-29
A	WO 2022038510 A1 (TELEFONAKTIEBOLAGET LM ERICSSON PUBL) 24 February 2022 (2022-02-24) the whole document	1-29
A	US 2022070811 A1 (SAMSUNG ELECTRONICS CO., LTD.) 03 March 2022 (2022-03-03) the whole document	1-29

☐ Further documents are listed in the continuation of Box C. ☑ See patent family annex.

* Special categories of cited documents:
"A" document defining the general state of the art which is not considered to be of particular relevance
"E" earlier application or patent but published on or after the international filing date
"L" document which may throw doubts on priority claim(s) or which is cited to establish the publication date of another citation or other special reason (as specified)
"O" document referring to an oral disclosure, use, exhibition or other means
"P" document published prior to the international filing date but later than the priority date claimed
"T" later document published after the international filing date or priority date and not in conflict with the application but cited to understand the principle or theory underlying the invention
"X" document of particular relevance; the claimed invention cannot be considered novel or cannot be considered to involve an inventive step when the document is taken alone
"Y" document of particular relevance; the claimed invention cannot be considered to involve an inventive step when the document is combined with one or more other such documents, such combination being obvious to a person skilled in the art
"&" document member of the same patent family

Date of the actual completion of the international search	Date of mailing of the international search report
09 December 2022	**16 December 2022**
Name and mailing address of the ISA/CN **National Intellectual Property Administration, PRC** **6, Xitucheng Rd., Jimen Bridge, Haidian District, Beijing** **100088, China** Facsimile No. **(86-10)62019451**	Authorized officer **ZHANG,Qi** Telephone No. **86-(10)-53961607**

INTERNATIONAL SEARCH REPORT
Information on patent family members

International application No.
PCT/CN2022/088383

Patent document cited in search report	Publication date (day/month/year)	Patent family member(s)	Publication date (day/month/year)
WO 2022067718 A1	07 April 2022	None	
CN 112911699 A	04 June 2021	None	
CN 111294801 A	16 June 2020	EP 3893537 A1	13 October 2021
		US 2022030478 A1	27 January 2022
		WO 2020114276 A1	11 June 2020
WO 2022038510 A1	24 February 2022	None	
US 2022070811 A1	03 March 2022	WO 2022045867 A1	03 March 2022