(12) STANDARD PATENT (11) Application No. **AU 2011223654 B2**
(19) AUSTRALIAN PATENT OFFICE

(54) Title
Bottom-up optimized search system and method

(51) International Patent Classification(s)
G06Q 10/00 (2012.01)

(21) Application No: **2011223654** (22) Date of Filing: **2011.03.03**

(87) WIPO No: **WO11/109583**

(30) Priority Data

(31) Number	(32) Date	(33) Country
12/718,446	**2010.03.05**	**US**

(43) Publication Date: **2011.09.09**
(44) Accepted Journal Date: **2014.11.13**

(71) Applicant(s)
Six Continents Hotels, Inc.

(72) Inventor(s)
Gonzalez, Dario;Ong, Tahchuan;Tan, Darren Yeesoon;McClure, Jonathan P.;Matteo, Santiago;Rajarathinam, Rajienderkumar

(74) Agent / Attorney
Spruson & Ferguson, L 35 St Martins Tower 31 Market St, Sydney, NSW, 2000

(56) Related Art
US 7328166

(12) INTERNATIONAL APPLICATION PUBLISHED UNDER THE PATENT COOPERATION TREATY (PCT)

(19) World Intellectual Property Organization
International Bureau

(43) International Publication Date
9 September 2011 (09.09.2011)

PCT

(10) International Publication Number
WO 2011/109583 A2

(51) International Patent Classification:
G06Q 10/00 (2006.01) *G06F 17/30* (2006.01)

(21) International Application Number:
PCT/US2011/026966

(22) International Filing Date:
3 March 2011 (03.03.2011)

(25) Filing Language: English

(26) Publication Language: English

(30) Priority Data:
12/718,446 5 March 2010 (05.03.2010) US

(71) Applicant *(for all designated States except US)*: **SIX CONTINENTS HOTELS, INC.** [US/US]; 3 Ravinia Drive, Suite 100, Atlanta, GA 30346 (US).

(72) Inventors; and

(75) Inventors/Applicants *(for US only)*: **GONZALEZ, Dario** [US/US]; 2030 Ector Overlook, Kennesaw, GA 30152 (US). **ONG, Tahchuan** [US/US]; 3045 Brockton Close, Marietta, GA 30068 (US). **TAN, Darren, Yeesoon** [MY/US]; 390 17th Street, Unit 5011, Atlanta, GA 30363 (US). **MCCLURE, Jonathan, P.** [US/US]; 2470 Hamptons Passage, Alpharetta, GA 30005 (US). **MATTEO, Santiago** [CL/US]; 2172 Deep Woods Way, Marietta, GA 30062 (US). **RAJARATHINAM, Rajienderkumar** [IN/US]; 4867 Ashford Dunwoody Road, Apt. 8315, Dunwoody, GA 30338 (US).

(74) Agents: **ADAMS, Scott, S.** et al.; Kilpatrick Townsend & Stockton LLP, Two Embarcadero Center, 8th Floor, San Francisco, CA 94111-3834 (US).

(81) Designated States *(unless otherwise indicated, for every kind of national protection available)*: AE, AG, AL, AM, AO, AT, AU, AZ, BA, BB, BG, BH, BR, BW, BY, BZ, CA, CH, CL, CN, CO, CR, CU, CZ, DE, DK, DM, DO, DZ, EC, EE, EG, ES, FI, GB, GD, GE, GH, GM, GT, HN, HR, HU, ID, IL, IN, IS, JP, KE, KG, KM, KN, KP, KR, KZ, LA, LC, LK, LR, LS, LT, LU, LY, MA, MD, ME, MG, MK, MN, MW, MX, MY, MZ, NA, NG, NI, NO, NZ, OM, PE, PG, PH, PL, PT, RO, RS, RU, SC, SD, SE, SG, SK, SL, SM, ST, SV, SY, TH, TJ, TM, TN, TR, TT, TZ, UA, UG, US, UZ, VC, VN, ZA, ZM, ZW.

(84) Designated States *(unless otherwise indicated, for every kind of regional protection available)*: ARIPO (BW, GH, GM, KE, LR, LS, MW, MZ, NA, SD, SL, SZ, TZ, UG, ZM, ZW), Eurasian (AM, AZ, BY, KG, KZ, MD, RU, TJ, TM), European (AL, AT, BE, BG, CH, CY, CZ, DE, DK, EE, ES, FI, FR, GB, GR, HR, HU, IE, IS, IT, LT, LU, LV, MC, MK, MT, NL, NO, PL, PT, RO, RS, SE, SI, SK, SM, TR), OAPI (BF, BJ, CF, CG, CI, CM, GA, GN, GQ, GW, ML, MR, NE, SN, TD, TG).

Published:

— *without international search report and to be republished upon receipt of that report (Rule 48.2(g))*

WO 2011/109583 A2

(54) **Title**: BOTTOM-UP OPTIMIZED SEARCH SYSTEM AND METHOD

(57) **Abstract**: A system and method for searching for hotel rooms is provided. A pre-compute database comprising real-time availability attributes associated with hotel rooms on a plurality of length of stays may be generated, and a query for at least one hotel for a date range may be received. The availability of each day within the date range on a plurality of length of stays may be calculated by applying business requirements according to the query. Final availability may be created for each day within the date range on the plurality of length of stays by combining the availability from the pre-compute database and the query attributes. A final availability of hotel rooms may be formatted for the at least one hotel for each day within the date range on the plurality of length of stays.

BOTTOM-UP OPTIMIZED SEARCH SYSTEM AND METHOD

BACKGROUND

[0001] Existing hotel and travel computerized reservation systems use a top down search approach, creating single availability cells as they are discovered from the search request. For example, such systems may allow a user to input search criteria, such as the identity of the hotel, the check-in date, and the check-out date, to discover available hotel rooms for the selected number of nights (i.e. Single Length of Stay). Only after the product items (i.e., hotel rooms) are found is business logic applied to find rates and availability for the specific set of product items.

[0002] This prior art approach has several disadvantages. Because of the top-down nature of this approach, the product items (e.g., sellable rooms) need to be searched for and discovered with each request. Further, the search request must have as a minimum a hotel name/code, a check-in date and a check-out date. The availability request will be rejected if these minimum elements are not in the request.

[0003] Moreover, the core service of the prior art approach only allows for one hotel to be checked at a time, and given that the check-in and check-out dates are used in the search, the rates and availability response reflects only the specific number of nights. The basic search allows no alternate dates to be used, and thus no alternate rates to be discovered.

[0004] If a city search is performed (i.e., a search focusing on one city), this request is broken up into multiple searches for single hotels, and each such core hotel search is performed one at a time. The core search service doesn't recognize relationships between multiple hotels. Because every core request is performed one hotel at a time, with each request requiring complex business rules to be performed to find rates and availability, the cost of CPU time and resources is high. Additionally, given the CPU- and resource-intensive nature of each request, the response time can be relatively slow. The need to discover and compute rates and availability rules for every request takes time.

[0005] Also, in the prior art system, the request is very user-specific and does not allow for the transaction system to help discover alternate types of products, such as. different room types, etc.

[0006] Perhaps the biggest disadvantage of the existing art is the single availability cell. The single availability cell is derived from a well defined Length of Stay (LOS) in the search request. The LOS is derived from the Start Date and End Date in the search request. There is no visibility for the multiple possible combinations that can be derived from the LOS in the search request. For example, if the requestor want to also evaluate different options with respect of the LOS, it will require several separate search request for each LOS option. The prior art does not provide flexibility of alternate dates or product items. The cost and the time required to build a reply with full flexibility is not cost effective at this time. For example: if a customer wants to check availability for the first week of May, 49 separate availability calls will be required. Seven availability calls for each day of the week (i.e. 7 days X 7 LOS values per day). This transaction will increase the cost by a factor of 48 times (i.e. difference between 1 call and 49 calls), and will result a very long response time to the customer (i.e., a bad user experience).

[0007] There therefore exists a need in the art for improvements to travel and hotel transaction systems, as described in further detail below.

[0007A] The background discussion (including any potential prior art) is not to be taken as an admission of the common general knowledge in the art in any country. Any references discussed state the assertions of the author of those references and not the assertions of the applicant of this application. As such, the applicant reserves the right to challenge the accuracy and relevance of the references discussed.

[0007B] It is an object of the present invention to substantially overcome, or at least ameliorate, one or more disadvantages of existing arrangements, or to at least provide the public with a useful choice.

SUMMARY

[0007C] In the context of this specification, the word "comprising" means "including principally but not necessarily solely" or "having" or "including", and not "consisting

only of". Variations of the word "comprising", such as "comprise" and "comprises" have correspondingly varied meanings.

[0007D] According to one aspect of the present disclosure, there is provided a computer implemented method for improving searches for availability of hotel rooms in a database by balancing between pre-compute data and on-the-go data, the method comprising the steps of: generating, by a computer system, a pre-compute database comprising data computed prior to receiving a query to the pre-compute database, the data comprising real-time availability attributes associated with hotel rooms on a plurality of length of stays; receiving, by the computer system, the query to the pre-compute database, the query comprising a request for at least one hotel for a date range, the date range having a start date and an end date; determining, by the computer system, a first search result from the pre-compute database based on the query, the first search result comprising a first availability being associated with at least one of the plurality of length of stays; calculating, by the computer system based on the query and on requirements, a second search result, the second search result calculated from a source different than the pre-compute database, the second search result comprising availability of each day within the date range on a plurality of length of stays, the requirements comprising a requirement specifying a processing time for calculating the second search result; creating, by the computer system, a final result by combining the first search result and the second search result, the final result comprising a final availability for each day within the date range on the plurality of length of stays; and formatting, by the computer system, the final result, the formatting comprising formatting the final availability of hotel rooms for the at least one hotel for each day within the date range on the plurality of length of stays, wherein each length of stay of the plurality of length of stays comprises a stay at dates unique to the length of stay.

[0007E] According to a second aspect of the present disclosure, there is provided a system for improving searches for availability of hotel rooms in a database by balancing between pre-compute data and on-the-go data, the system comprising: one or more processors; memory, including executable instructions that, when executed by the one or more processors, cause the system to at least: generate a pre-compute database comprising data computed prior to receiving a query to the pre-compute database, the data comprising real-time availability attributes associated with hotel rooms on a plurality of length of stays; receive the query to the pre-compute database, the query

comprising a request for at least one hotel for a date range, the date range having a start date and an end date; determine a first search result from the pre-compute database based on the query the first search result comprising a first availability being associated with at least one of the plurality of length of stays; calculate, based on the query and requirements, a second search result, the second search result calculated from a source different than the pre-compute database, the second search result comprising availability of each day within the date range on a plurality of length of stays, the requirements comprising a requirement specifying a processing time for calculating the second search result; create a final result by combining the first search result and the second search result, the final result comprising a final availability for each day within the date range on the plurality of length of stays; and format the final result, the formatting comprising formatting the final availability of hotel rooms for the at least one hotel for each day within the date range on the plurality of length of stays, wherein each length of stay of the plurality of length of stays comprises a stay at dates unique to the length of stay.

[0007F] According to a third aspect of the present disclosure, there is provided a computer program product, comprising a non-transitory computer-readable medium having a computer-readable program code embodied therein, the computer-readable program code adapted to be executed to implement a method for improving searches for availability of hotel rooms in a database by balancing between pre-compute data and on-the-go data, comprising: generating a pre-compute database comprising data computed prior to receiving a query to the pre-compute database, the data comprising real-time availability attributes associated with hotel rooms on a plurality of length of stays; receiving the query to the pre-compute database, the query comprising a request for at least one hotel for a date range, the date range having a start date and an end date; determining a first search result from the pre-compute database based on the query the first search result comprising a first availability being associated with at least one of the plurality of length of stays; calculating, based on the query and on requirements, a second search result, the second search result calculated from a source different than the pre-compute database, the second search result comprising availability of each day within the date range on a plurality of length of stays, the requirements comprising a requirement specifying a processing time for calculating the second search result; creating a final result by combining the first search result and the second search result, the final result comprising a final availability for each day within

2011223654 07 Oct 2014

the date range on the plurality of length of stays; and formatting the final result, the formatting comprising formatting the final availability of hotel rooms for the at least one hotel for each day within the date range on the plurality of length of stays, wherein each length of stay of the plurality of length of stays comprises a stay at dates unique to the length of stay.

BRIEF DESCRIPTION OF THE DRAWINGS

[0008] The accompanying drawings, which are incorporated in and constitute a part of this specification, illustrate embodiments and together with the description, serve to explain the principles of the methods and systems:

[0009] FIG. 1A depicts the architecture of a hotel reservation system.

[0010] FIG. 1B depicts the architecture of the basic building blocks of the present invention, in one embodiment.

[0011] FIG. 2 depicts the architecture of the present invention in yet another embodiment.

[0012] FIG. 3 depicts a high level sequence diagram depicting the invention, in one embodiment.

[0013] FIG. 4 is a framework architecture flow diagram, for use with the invention in one embodiment.

[0014] FIG. 5 is a diagram depicting the various calculators that could be used with the present invention, in one embodiment.

[0015] FIG. 6 is a sample UML that may be used for the mask calculators.

[0016] FIG. 7 depicts steps that may be taken by the present invention, in one embodiment.

DETAILED DESCRIPTION

[0017] Before the present methods and systems are disclosed and described, it is to be understood that the terminology used herein is for the purpose of describing particular embodiments only and is not intended to be limiting.

[0018] As used in the specification and the appended claims, the singular forms "a," "an" and "the" include plural referents unless the context clearly dictates otherwise. Ranges may be expressed herein as from "about" one particular value, and/or to "about" another particular value. When such a range is expressed, an embodiment may include, for example only, from the one particular value and/or to the other particular value. Similarly, when values are expressed as approximations, by use of the antecedent "about," it will be understood that the particular value forms another embodiment. It will be further understood that the endpoints of each of the ranges are significant both in relation to the other endpoint, and independently of the other endpoint.

[0019] "Optional" or "optionally" means that the subsequently described event or circumstance may or may not occur, and that the description includes instances where said event or circumstance occurs and instances where it does not.

[0020] Throughout the description and claims of this specification, the word "comprise" and variations of the word, such as "comprising" and "comprises," means "including but not limited to," and is not intended to exclude, for example, other additives, components, integers or steps. "Exemplary" means "an example of" and is not intended to convey an indication of a preferred or ideal embodiment. "Such as" is not used in a restrictive sense, but for explanatory purposes.

[0021] Disclosed are components that can be used to perform the disclosed methods and systems. These and other components are disclosed herein, and it is understood that when combinations, subsets, interactions, groups, etc. of these components are disclosed that while specific reference of each various individual and collective combinations and permutation of these may not be explicitly disclosed, each is specifically contemplated and described herein, for all methods and systems. This applies to all aspects of this application including, but not limited to, steps in disclosed methods. Thus, if there are a variety of additional steps that can be performed it is understood that each of these additional steps can be performed with any specific embodiment or combination of embodiments of the disclosed methods.

[0022] The present methods and systems may be understood more readily by reference to the following detailed description of preferred embodiments and the examples included therein and to the figures and their previous and following description.

[0023] The present invention provides for an improved hotel room availability transaction system. FIG. 1A depicts the architecture of a state-of-the art hotel reservation system; namely the HOLIDEX (HDX) system operated by Six Continents Hotels, Inc. for its worldwide chains of hotels. The present invention may be used in conjunction with this system, or any other suitable hotel reservation system available on the market.

[0024] In the reservation system of FIG. 1A, the HDX server 101 stores the current availability by date, rates, as well as other detailed information regarding hotel rooms. Various clients 102a, 102b, 102c and 102d may submit requests to the HDX server 101. For example, clients 102a may comprise travel web sites coupled to the HDX server 101 through an intermediary data center 103, using for example an OTA or XML protocol to communicate with the HDX server 101. Clients 102b may comprise global distribution systems (GDS) such as Sabre, Galileo, WorldSpan, Amadeus or TravelWeb, using, for example, the Pegasus protocol to communicate with the HDX server 101. The corporate owners of the hotel brands may communicate via clients 102c with the HDX server via, for example, the 3270 or XML protocols. Finally, individual hotels 102d may communicate with the HDX server 101 using, for example, the XML and/or the HMI protocol.

[0025] The availability search requests submitted by a client (102a, 102b, 102c and/or 102d) to the HDX server 101 may include as a minimum a hotel code, check-in date and check-out date. Because searching for multiple hotels, multiple data ranges, etc., can normally lead to the need for multiple searches on the HDX server 101, the present invention provides an improved way to perform searches, as described further below. The biggest challenge in today's environments (i.e.hardware and network) in every major data center is the tremendous growth of 60% availability traffic every year. The most efficient search process is a delicate balance between pre-compute data and on-the-go data. When millions of search requests hit a reservation system every day, the savings of having part of the availability data already computed translates into a powerful availability transaction system. To determine how to most efficiently perform searches on the HDX server 101, the availability process is tokenized to categorize each step based on various criteria. While the categorization may take many forms, in one embodiment the following criteria of Table A may be used:

Criteria	Tokenization
Discovery process	Every element of the availability is graded (low to high) based on the amount of database calls and logic required to discover the product item for the request. For example, in one embodiment, the grading may be: Hotel = low Rate category = low Product item = high
Processing cycles	Each business logic component may be graded (low to high) based on the amount of processing time it needs. For example, in one embodiment, the grading may be: Close to arrival = low Stay over days = medium Net revenue = high
Association level	Each business logic component may be associated with the element of availability that executes specific business logic. For example, in one embodiment: Net revenue = product item Stay over days = rate category

Table A

[0026] As depicted in FIG. 1B, the present invention includes a PreCompute Availability Database 151, as well as an Availability Rule Calculator Engine 152 In one embodiment, the PreCompute Availability Database 151 may comprise a relational database that has 2 main characteristics:

- Each row represents the lowest possible sellable unit (product item) for one day. The discovery process to find the set of product items per day is not required. Every product item per day may be derived from a high level rate category that uses a rate code definition with room types associated by class and date range availability.

- The size of the table should be manageable. The table is fast to update and to read from. The number of elements for each product item are very selective in order to maintain to a minimum the number of elements to pre-compute in each row.

[0027] The database primary key may be formed by: Hotel code, date, room type and rate category. The other key data of each row may be, in one embodiment:

- **Physical length of stay (LOS)**. This string value represents a bit mask for each night up to a stay of, for example, 14 days (any other maximum LOS could be chosen as well). The physical availability of the room type may use concepts of allocation, total number of rooms and run of the house room type. These rules may apply repeatedly for every night of the LOS mask.

- **Rate Amount**. The rate amount may be derived from the rate code associated with the rate category of the product item. The amount value may be a flat amount or a percent value. At the same time, the amount may be found at the rate code level or from another base rate code.

- **Revenue LOS**. This string value may represent a bit mask for each night up to, for example, a stay of 14 days (or any other maximum LOS). The yield management component may use a net revenue calculation based on the LOS. Positive revenue may be represented with an open (1) and a negative revenue may be represented with a closed (0). There may be several yield options that may indicate to use another value, based on other rate or overrides. These rules may apply repeatedly for every night of the LOS mask.

- **Rate Code.** The parity concept may use the rate code to maintain levels of relationship between all rate codes.

[0028] The layout of this relational database produces a very fast way to fetch product items. It is possible to join the Pre-compute Availability Database 151 with attribute tables in order to implement filters at this initial stage. Some of the attributes like bed type, number of beds and/or maximum occupancy could, in one embodiment, help in the pre-selection of the product items. This is unlike the current art which applies filters at the end of the availability process, which leads to extra processing cycles on non-qualifying product items.

[0029] The values that are LOS-driven may use a bit mask representation. Each bit represents a night and the values could be open (1) or closed (0). There is no limitation in how long the LOS may represent. The proper value may correspond to the proper audience or hotel brand. For example, in one embodiment, extended stay brands may have up to 28 days or longer of LOS pre-calculated.

[0030] As shown in FIG. 2, in one embodiment, the Availability Rule Calculator Engine 151 and PreCompute Availability Database 152 may comprise a PreCompute framework comprising a J2EE application 201 which consumes messages from a Web Sphere MQ 202 and processes the messages and updates an Oracle database 203 with required data. The framework may comprise a J2EE application 201 which may include a Core Java Application 204. FIG. 2 depicts the overall framework with the major components in each of the applications, according to one embodiment of the present invention. Other suitable frameworks may be used as well.

[0031] FIG. 3 is a high level sequence diagram that depicts the general flow of message processing in the Precompute Engine of FIGS. 1B and 2. This sequence diagram shows the scenario when messages arrive in sequence and are processed immediately. FIG. 4 is a framework architecture flow diagram, that depicts the overall flow of the present invention, in one embodiment.

[0032] The architectural components of FIGS. 2-4 will be defined in further detail below.

- **PreComputeMDBean 211** - PreComputeMDBean 211 is a Message Driven Bean which listens on the MQ Series 202 Queue 411 which receives a message from HOLIDEX 101. It calls the MessageManager 214 with the XML message it received from HOLIDEX 101.

- **Stateless Session Beans 212**: The following Stateless Session Beans 212 may be used:

- **BootStrapBean**: used for initializing the Application. Log4j and other Timer Task oriented beans are initialized here when the application starts up

- **MessageManagerBean**: This EJB is used to process the messages for all sources and clients . Basically it can call the MessageManager 214 or extend it. Also this bean can be called by the MDB 211.

- **Timer Beans 231** - This EJB uses the Timer Service. This EJB is used to process messages which are pending in the pending message table. This EJB runs at predetermined time and calls the MessageManager, locks any hotel which has messages pending and process the message. It is important to process events from Holidex sequentially. The implementation of a cluster environment (i.e. different nodes can get updates for the same hotel at the same time) requires this method of update processing.

- **Metric Manager 232** - This stateless session bean is used to collect metrics at pre defined time using Timer Service .(say at every hour). It implements TimedObject. This EJB will be initialized by the BootStrapBean and the timer will be created.

- **Data Clients 233** - The **DataClients** component is a single component that lives inside the PreCompute engine. It's role is two-fold. First it provides specific information regarding how Product Items are to be built on behalf of the Push

clients. And second, it provides a means to notify those Push clients of the changes once they are made.

- **Logging 234 - Log4J** will be used as a logging Mechanism for the Application. The logged Messages will be directed to a file on the server on which the application server is running. The Configuration for Log4j Should be loaded by using a BootStrap EJB or using a start up class in the App server. There are different levels of logging: Debug, Info, Warn and Error.

- **MessageManager 214 -** Message Manager 214 primarily may perform two operations. First it converts the XML Message to a Java object and than it may call a particular PreCompute Manager 216 based on the message type. It also manages the sequential processing of messages based on Hotel code and message sequence number. It the messages are not in sequence, the message will be stored in a separate table for later processing.

- **ManagerFactory 218 -** Manager Factory 218 class dynamically creates the PreComputeManagers 216 based on the message type. Once it creates a manager, it may cache it for later use.

- **XMLSchema Java Classes -** Theses XMLSchema Java classes may be a part of Message Manager 214, and are generated based on the XML Messages received from HOLIDEX 101. These classes hold the value of XML elements and attributes in their method. These XML bean classes are used as data carriers thus avoiding a separate transfer object for each message.

- **PreComputeManager 216 -** In one embodiment, there will a separate PreCompute Manager 216 for each message type or for a combination of message types. Their basic functionality is to convert the received Java objects to the desired database related fields using some business logic and PreCompute Utility classes. Most of the business processing happens here and in the Utility Classes

- **HotelLockUtil 220** - This class is used to lock a hotel data in House message table. The messages are processed for the hotel once the record is locked. It is necessary to lock the hotel in order to process messages in sequential order and prevent a race condition with other messages for same hotel. If messages are recorded out of sequence, it will invalidate the full database.

- **PendingMessageUtil** - This Class is used for storing, retrieving and deleting messages in the pending message table. As the messages are read from the MQ queue using a cluster environment, it is necessary to process the messages in sequence. Every hotel message carries a sequence number to maintain sequence order processing..

- **Validation classes 222** - In one embodiment, there are separate validation classes for each message. These validation classes validate the messages and if they found in error, they throw a PreComputeException

- **Data Access Objects (DAOs) 226** - The Data Access Objects 226 abstract the Communication and CRUD operations related to the Oracle Database 203. The PreCompute Manager 216 calls an appropriate DAO 226 to update the tables. The DAO 226 may be based on a single table or based on related tables. Basically this DAO 226 gets a database connection from a DBConnector class 228, prepares SQL calls to the database and performs the CRUD operations. Once these operations are done, it releases the connection to the database 203. .

- **DBConnector 228** - DBConnector 228 is a Java class which abstracts the connection mechanism for the database 203. In one embodiment, it will get the connection to the database 203 by calling a datasource object. This class will have various methods such as releasing the connection, rolling back a transaction, etc.

- **PreCompute Utility Components** - All common functionality needed for the application may be developed as utility classes such as date validation or

conversion of specific data as needed by the application. There may be some utility classes specific to message types.

[0033] The Availability Rule Calculator Engine 152 may include logic grouped into two categories:

- Business logic that is based on the check-in date value of the search request, so it can not be pre-computed. An example of such logic would be advance purchase restrictions.

- Business logic that was graded low in processing time (based on the criteria described previously with respect to Table A) and it was associated with a well-defined element of availability.

[0034] The overall goal is to develop a good balance between the PreCompute Availability Database 151 and the Availability Rule Calculator Engine 152 logic . This balance may be dynamically adjusted to maintain high performance. In case new logic is added to the availability model, this could modify the scoring in some of the elements of availability, which would create a new balanace (i.e., a sweet spot) between the PreCompute Availability Database 151 and the Availability Rule Calculator Engine 152 logic.

[0035] The Availability Rule Calculator 152 handles the "on-the-go" logic of the availability process. Business rules may be separated in different components (i.e. availability calculators) so they can be implemented independently. There may be some fences and restrictions that can be applied in real time with each request. For example, these may represent attributes that hotels can set to control availability; for example: Advance Purchase, Stay-Over_nights, Minimum/Maximum Stay, Special requirements. Other fences and restrictions may only be found at the hotel level, rate category level and rate code level. The order in how the business rules are applied may have a direct impact in the processing time cycle.

[0036] The Availability Rule Calculator engine 152 may have two main components:

- **The Product item collector**. the orchestrator of the Availability process. It uses a CollectionOptions to specify the rules and the order of the rules the will be applied.

- **The Availability Rule Calculators**. Each Calculator (described further below with respect to FIG. 5) implements the MaskCalculator 507 interface and must provide a getMask() method that the Collector will call. The mask returned is ANDed, along with the other masks, against the current ProductItems LOS mask to apply the rule. They must also supply a reason code by implementing getReasonCode().

[0037] In one embodiment, the Availability Rule Calculator engine 152 may be built and operate as described in further detail below.

Class Model

[0038] Internally, the Collector 502 collaborates with several "Calculator" components (507 and 601-606 of FIG. 6, described further below), each dedicated to a particular class of Length of Stay (LOS) rule. In general, each calculator returns a bit mask that is ANDed together with the ProductItem LOS masks to derive the overall LOS mask.

Collection Context

[0039] The CollectionContext object 503 is used for holding global state with respect to a collection cycle. When a caller invokes collect() on the Collector 502 (via the ProductItemCollector interface 504), the Collector 502 will create a CollectionContext object 503. The CollectionContext 503 may have the following properties:

- Hotel Code
- Rate Category Codes
- Dates
- Database Object

- CollectionOptions
- Cached Facts

[0040] The CollectionContext 503 is passed into the constructor for each calculator The constructor initializes the environment of each calculator, and it is a software component of the class.. The Calculators use the CollectionContext 503 to get the Database 203 to query the CRS tables. They also use it to share facts with each other through the context object. For example, if the Hotel is discovered to be a HIRO Hotel, then that fact may be important for more than one Calculator.

Calculators

[0041] The Calculators (601-606) are key business logic components for the PACE engine. The CollectionStrategy 505 determines which Calculators to use based on what was specified in the CollectionOptions 506. Each Calculator implements the MaskCalculator 507 interface and can provide a getMask() method that the Collector 502 will call. The mask returned is ANDed , along with the other masks, against the current ProductItems LOS mask to apply the rule. A reason code may also be supplied by implementing, for example, getReasonCode().

[0042] A sample interface for the MaskCalculator 507 may be:

```
public interface MaskCalculator {
  int getMask(ProductItem pi) throws ServiceException;
  int getReasonCode();
}
```

[0043] There may be any number MaskCalculators 507. FIG. 6 depicts an example UML for the current set. In one embodiment, the Calculators may carry a very specific fence or restriction rules of the IHG availability model, such as:

- Arrival Calculator 601 – It uses the check-in day of the request to validate if a black-out date or a closed to arrival is set at the hotel or rate category level.

- MinMax Calculator 602 – It uses the check-in date and the check-out date to derive a LOS. The LOS value should satisfy the minimum and maximum day of stay restriction, if it exists.

- Revenue Calculator 603 – It verifies that the LOS for specific rate amount produces a positive revenue.

- RoomSS Calculator 604 – It verifies that the specific room type is associated with the room sell strategy of the hotel. The hotel room sell strategy identifies the room types that are visible for sale.

- StayoverDays Calculator 605 - It uses the check-in date and the check-out date to derive a LOS. The LOS value should satisfy days of the week that required a stay over.

- Active Days Calculator 606 - It uses the check-in date and the check-out date to derive a LOS. The LOS value should satisfy days of the week that are flagged active.

Hotel Rule Cache

[0044] It is advantageous to have the PACE engine be as efficient as possible. With reference to FIGS. 5 and 6, much of this may fall on the implementation of the MaskCalculators 507 since they include hotel rules encoded in the CRS database. Each time the PACE engine constructs a new MaskCalculator 507, the calculator 507 can optimize itself by prefetching data it needs only once from the database 203, and then using it repeatedly for each invocation of its getMask() method. Even so, having all of the calculators query the database for rules that rarely change is a significant hit on performance, and should be avoided.

[0045] To address this, the CollectionContext object 503 (FIG. 5) may include support to cache rules on behalf of the MaskCalculators 507. Once a MaskCalculator 507 has built its rules from the database 203, it can cache them on the CollectionContext 503. This in turn means all MaskCalculators 507 can first check to see if the rules they need are still

present before hitting the database 203 and rebuilding the rules. This model will contribute to an increase in performance, and therefore can be used whenever possible.

[0046] Here is what the methods may look like for caching rules:

```
public class CollectionContext {
  public Object getHotelRules(MaskCalculator c);
  public void putHotelRules(MaskCalculator c, Object rules);
}
```

[0047] Once a MaskCalculator 507 caches rules, the rules may remain in memory until one of the following events occur:

- Hotel rules change in the database 203
- LRU cache purges the hotel rules for resource management
- Application is restarted

[0048] In one embodiment, the MaskCalculators 507 may make every effort to use the cache methods and assume they are reliable. If a suitable solution for cache-change management is not available, then the PACE engine may ensure the cache isn't activated. Still, the MaskCalculators 507 may assume the cache active at all times.

- **Collection Strategies**

[0049] Because the PACE engine can be utilized for different purposes, a single search algorithm for all cases isn't appropriate. For example, availability requests from the Pull application may look at the higher level restrictions first and the product items last whereas the Push application [may want to look at the product items first and apply the rules in the most efficient order possible.

[0050] To address this, the PACE engine may use a CollectionStrategy 505 interface to represent how the collection is actually performed. This is basically an implementation of the Abstract Algorithm design pattern known to those having ordinary skill in the art. The selection of the strategy may be based on the settings in the CollectionOptions 506.

[0051] A sample interface for CollectionStrategy 505 is provided below:

```
public interface CollectionStrategy {

  void collect(CollectionContext ctx,
        ProductItemConsumer consumer) throws ServiceException;
}
```

[0052] In one embodiment, supported CollectionStrategies 505 may include:

Class	Description
BaseStrategy	abstract class with basic calculation template method
DefaultStrategy	extends BaseStrategy with SQL criteria for rate-category codes
ProductItemIDStrategy	extends BaseStrategy with SQL criteria for product item ids

- **Queries**

[0053] When the PACE engine is invoked, it may ultimately read the product items from the product item table and apply the MaskCalculators 507 to derive the final LOS. The query used to select the product items may take into consideration a number of factors. These include:

- Selection Criteria
- LOS History
- Sell-Thru Exclusions

[0054] The sections below describe these aspects for the query in more detail.

- Basic Query
- LOS History
- Sell-Thru Exclusions

(1) Basic Query

[0055] The basic query represents the simplest form of the SQL that selects the product items. In reality, this may not be the actual SQL used. But it is described since it may serve as the base-line for the other fully formed queries. In other words, to understand the full queries, an understanding of the basic query is important.

[0056] The criteria for the base query includes the following:

- Hotel Code
- Date Range
- Rate Category Codes
- Valid Status
- Change Token (optional)
- Excluded Room Codes (optional)
- Product Item IDs (optional)

[0057] "Valid Status" just means to skip the invalid Product Item rows. Change Token is used to select rows with a Token value equal to or higher than a specified value. The Excluded Rooms Types are used to filter out excluded rooms. Lastly, a list of Product Item IDs can be included instead of the Change Token for a more precise selection of product items.

[0058] The Token value and the Product Item IDs are used to help filter down only those Product Items that have actually been modified by PreCompute. While there are various ways that can be used to best indicate when and why Product Items change for PreCompute, the token number plus the product item IDs may be used in one embodiment.

[0059] The order that the Product Items are delivered to the ProductItemConsumer is important for two reasons. First, it allows the Calculators 507 to be efficient about context switching. Second, it allows the ProductItemConsumers to easily organize the results they are building.

[0060] To this end, the results may be ordered as follows:

- Date
- Rate Category Code
- Room Code

[0061] Based upon the above teachings, and with reference to FIG. 7, in one embodiment the present invention may therefore perform the steps of:

- generating a pre-compute database comprising real-time availability attributes associated with hotel rooms on a plurality of length of stays (step 701);
- receiving a query for at least one hotel for a date range, the date range having a start date and an end date (step 702);
- calculating the availability of each day within the date range on a plurality of length of stays by applying business requirements according to the query (step 703);
- creating final availability for each day within the date range on the plurality of length of stays by combining the availability from the pre-compute database and the query attributes (step 704); and
- formatting a final availability of hotel rooms for the at least one hotel for each day within the date range on the plurality of length of stays (step 705).

[0062] While the methods and systems have been described in connection with preferred embodiments and specific examples, it is not intended that the scope be limited to the particular embodiments set forth, as the embodiments herein are intended in all respects to be illustrative rather than restrictive.

[0063] Unless otherwise expressly stated, it is in no way intended that any method set forth herein be construed as requiring that its steps be performed in a specific order. Accordingly, where a method claim does not actually recite an order to be followed by its

steps or it is not otherwise specifically stated in the claims or descriptions that the steps are to be limited to a specific order, it is no way intended that an order be inferred, in any respect. This holds for any possible non-express basis for interpretation, including: matters of logic with respect to arrangement of steps or operational flow; plain meaning derived from grammatical organization or punctuation; the number or type of embodiments described in the specification.

[0064] It will be apparent to those skilled in the art that various modifications and variations can be made without departing from the scope or spirit. Other embodiments will be apparent to those skilled in the art from consideration of the specification and practice disclosed herein. It is intended that the specification and examples be considered as exemplary only, with a true scope and spirit being indicated by the following claims.

2011223654 07 Oct 2014

CLAIMS:

1. A computer implemented method for improving searches for availability of hotel rooms in a database by balancing between pre-compute data and on-the-go data, the method comprising the steps of:

generating, by a computer system, a pre-compute database comprising data computed prior to receiving a query to the pre-compute database, the data comprising real-time availability attributes associated with hotel rooms on a plurality of length of stays;

receiving, by the computer system, the query to the pre-compute database, the query comprising a request for at least one hotel for a date range, the date range having a start date and an end date;

determining, by the computer system, a first search result from the pre-compute database based on the query, the first search result comprising a first availability being associated with at least one of the plurality of length of stays;

calculating, by the computer system based on the query and on requirements, a second search result, the second search result calculated from a source different than the pre-compute database, the second search result comprising availability of each day within the date range on a plurality of length of stays, the requirements comprising a requirement specifying a processing time for calculating the second search result;

creating, by the computer system, a final result by combining the first search result and the second search result, the final result comprising a final availability for each day within the date range on the plurality of length of stays; and

formatting, by the computer system, the final result, the formatting comprising formatting the final availability of hotel rooms for the at least one hotel for each day within the date range on the plurality of length of stays, wherein each length of stay of the plurality of length of stays comprises a stay at dates unique to the length of stay.

2. The method of claim 1, wherein creating the final availability of each day within the date range on the plurality of length of stays includes using a bit mask to represent a length of stay, with each bit representing a day in the length of stay.

3. The method of claim 1, wherein the query is received from a travel web site.

4. The method of claim 1, wherein the query is received from a client.

5. The method of claim 1, wherein the calculating step is performed with a fence rule.

6. The method of claim 1, wherein the calculating step is performed with a restriction rule.

7. The method of claim 1, further comprising the step of transmitting the final availability of hotel rooms to a travel web site.

8. The method of claim 1, further comprising the step of transmitting the final availability of hotel rooms to a client.

9. The method of claim 1, wherein creating the final availability for each day within the date range includes combining pre-computed data associated with the first availability from the pre-compute database and dynamically-computed data associated with the second availability.

10. The method of claim 9, further comprising adjusting a ratio between the pre-computed data and the dynamically-computed data.

11. The method of claim 1, further comprising:

categorizing a plurality of steps of an availability query process into a plurality of categories, wherein the availability query process processes the query to output the final availability of hotel rooms;

associating a plurality of scores to the plurality of categories, wherein each score is based at least in part on a combination of database calls, discovery logic, and processing time;

prior to receiving the query, performing a step of the plurality of steps based at least in part on the corresponding score of the step to generate data of the pre-compute database; and

when logic is added to the availability query process, updating the scores associated with the plurality of categories and determining whether the step is to be

2011223654 07 Oct 2014

performed after receiving the query based at least in part on the updated scores.

12. A system for improving searches for availability of hotel rooms in a database by balancing between pre-compute data and on-the-go data, the system comprising:

one or more processors;

memory, including executable instructions that, when executed by the one or more processors, cause the system to at least:

generate a pre-compute database comprising data computed prior to receiving a query to the pre-compute database, the data comprising real-time availability attributes associated with hotel rooms on a plurality of length of stays;

receive the query to the pre-compute database, the query comprising a request for at least one hotel for a date range, the date range having a start date and an end date;

determine a first search result from the pre-compute database based on the query, the first search result comprising a first availability being associated with at least one of the plurality of length of stays;

calculate, based on the query and requirements, a second search result, the second search result calculated from a source different than the pre-compute database, the second search result comprising availability of each day within the date range on a plurality of length of stays, the requirements comprising a requirement specifying a processing time for calculating the second search result;

create a final result by combining the first search result and the second search result, the final result comprising a final availability for each day within the date range on the plurality of length of stays; and

format the final result, the formatting comprising formatting the final availability of hotel rooms for the at least one hotel for each day within the date range on the plurality of length of stays, wherein each length of stay of the plurality of length of stays comprises a stay at dates unique to the length of stay.

13. The system of claim 12, wherein generating the pre-compute database comprising real-time availability attributes associated with hotel rooms on the plurality of length of stays includes using a bit mask to represent a length of stay, with each bit representing a day in the length of stay.

14. The system of claim 12, wherein the query is from a travel web site.

15. The system of claim 12, wherein the query is from a client.

16. The system of claim 12, wherein calculating the availability of each day includes using a fence rule.

17. The system of claim 12, wherein calculating the availability of each day includes using a restriction rule.

18. The system of claim 12, wherein the instructions further cause the one or more processors to collectively transmit the final availability of hotel rooms to a travel web site.

19. The system of claim 12, wherein the instructions further cause the one or more processors to collectively transmit the final availability of hotel rooms to a client.

20. A computer program product, comprising a non-transitory computer-readable medium having a computer-readable program code embodied therein, the computer-readable program code adapted to be executed to implement a method for improving searches for availability of hotel rooms in a database by balancing between pre-compute data and on-the-go data, comprising:

generating a pre-compute database comprising data computed prior to receiving a query to the pre-compute database, the data comprising real-time availability attributes associated with hotel rooms on a plurality of length of stays;

receiving the query to the pre-compute database, the query comprising a request for at least one hotel for a date range, the date range having a start date and an end date;

determining a first search result from the pre-compute database based on the query the first search result comprising a first availability being associated with at least one of the plurality of length of stays;

calculating, based on the query and on requirements, a second search result, the second search result calculated from a source different than the pre-compute database, the second search result comprising availability of each day within the date range on a

2011223654 07 Oct 2014

plurality of length of stays, the requirements comprising a requirement specifying a processing time for calculating the second search result;

creating a final result by combining the first search result and the second search result, the final result comprising a final availability for each day within the date range on the plurality of length of stays; and

formatting the final result, the formatting comprising formatting the final availability of hotel rooms for the at least one hotel for each day within the date range on the plurality of length of stays, wherein each length of stay of the plurality of length of stays comprises a stay at dates unique to the length of stay.

Six Continents Hotels, Inc.

Patent Attorneys for the Applicant/Nominated Person

SPRUSON & FERGUSON

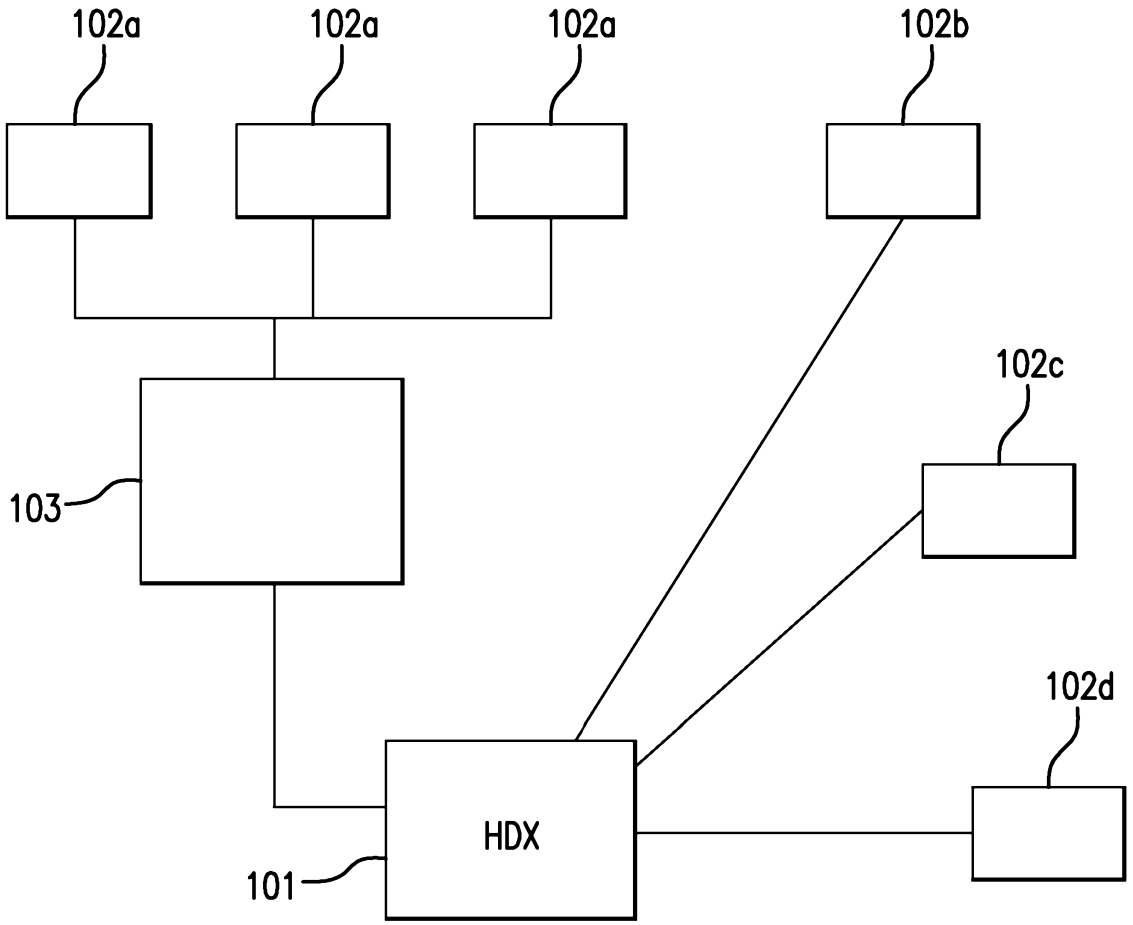

FIG. 1A

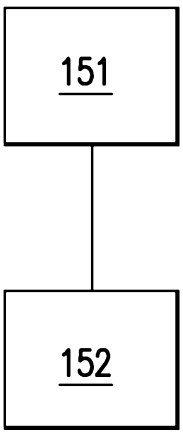

FIG. 1B

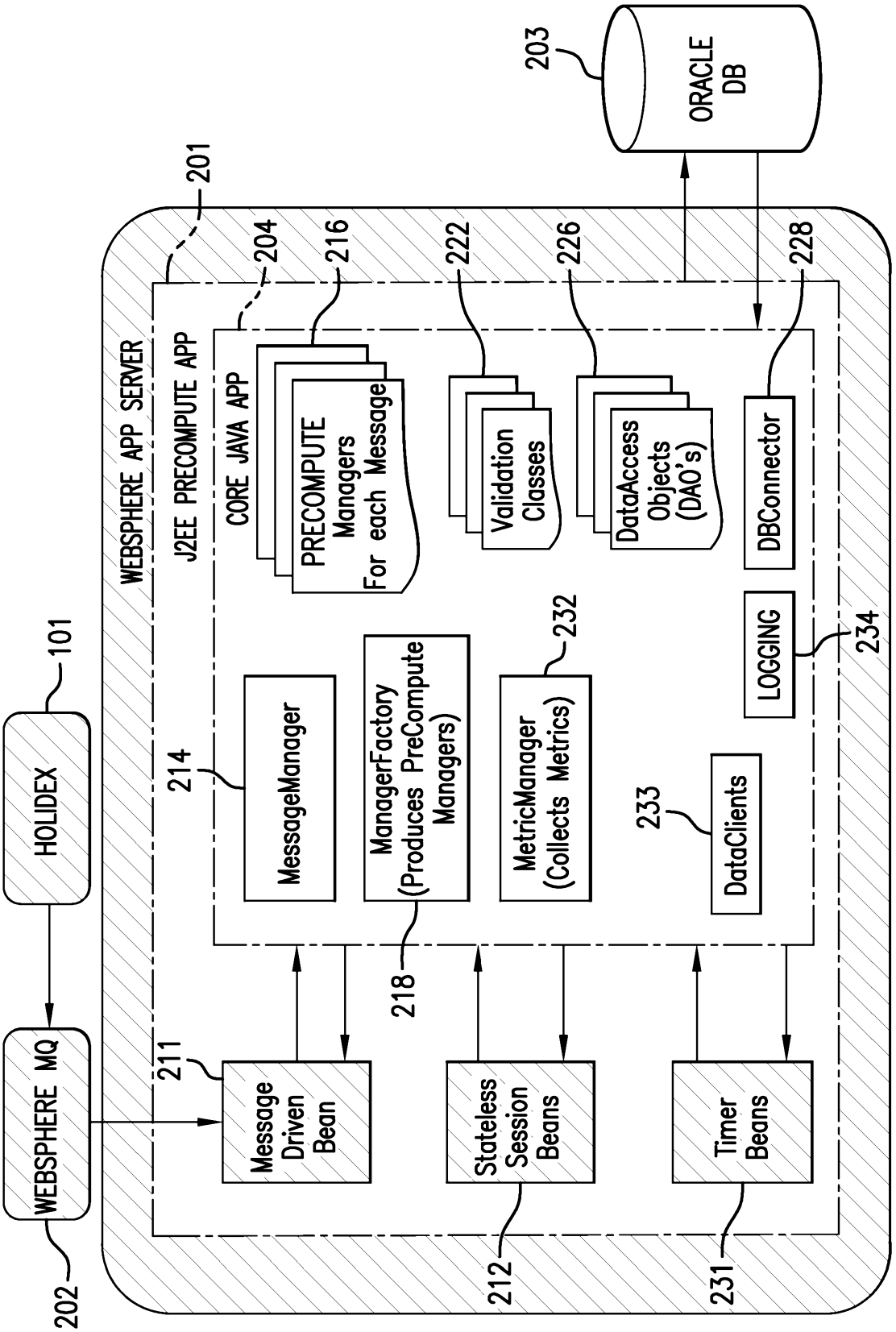
ORACLE DB
203
201
WEBSPHERE APP SERVER
J2EE PRECOMPUTE APP
CORE JAVA APP
204
216
222
226
228
PRECOMPUTE Managers For each Message
Validation Classes
DataAccess Objects (DAO's)
DBConnector
LOGGING
234
232
MessageManager
ManagerFactory (Produces PreCompute Managers)
MetricManager (Collects Metrics)
214
233
DataClients
218
211
Message Driven Bean
Stateless Session Beans
Timer Beans
212
231
HOLIDEX
101
WEBSPHERE MQ
202

FIG.2

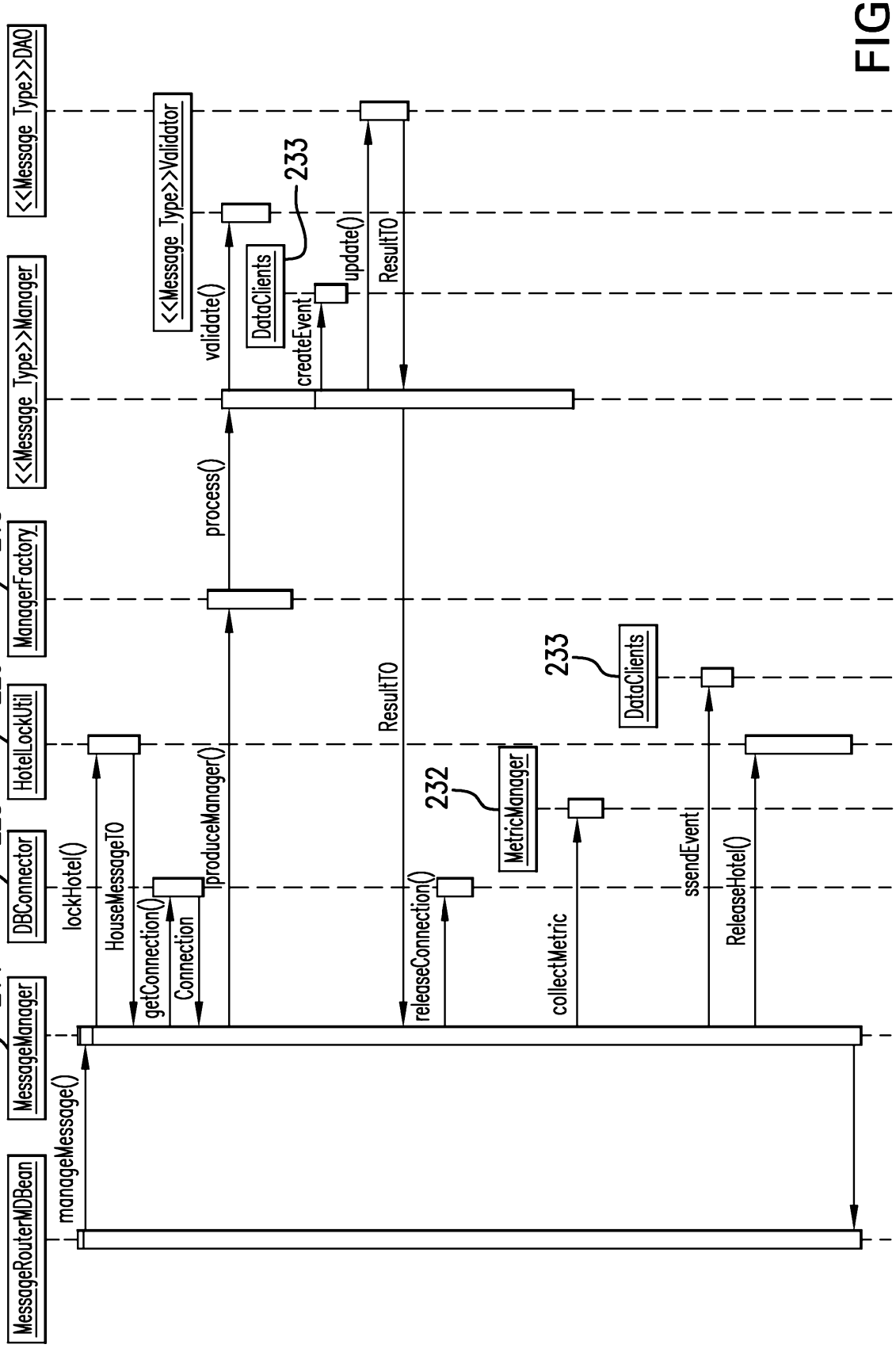
MessageRouterMDBean
214
MessageManager
228
DBConnector
220
HotelLockUtil
218
ManagerFactory
<<Message_Type>>Manager
<<Message_Type>>Validator
<<Message_Type>>DAO
manageMessage()
lockHotel()
HouseMessageTO
getConnection()
Connection
produceManager()
process()
validate()
DataClients
233
createEvent
update()
ResultTO
releaseConnection()
232
MetricManager
collectMetric
ssendEvent
ReleaseHotel()
ResultTO
233
DataClients

FIG.3

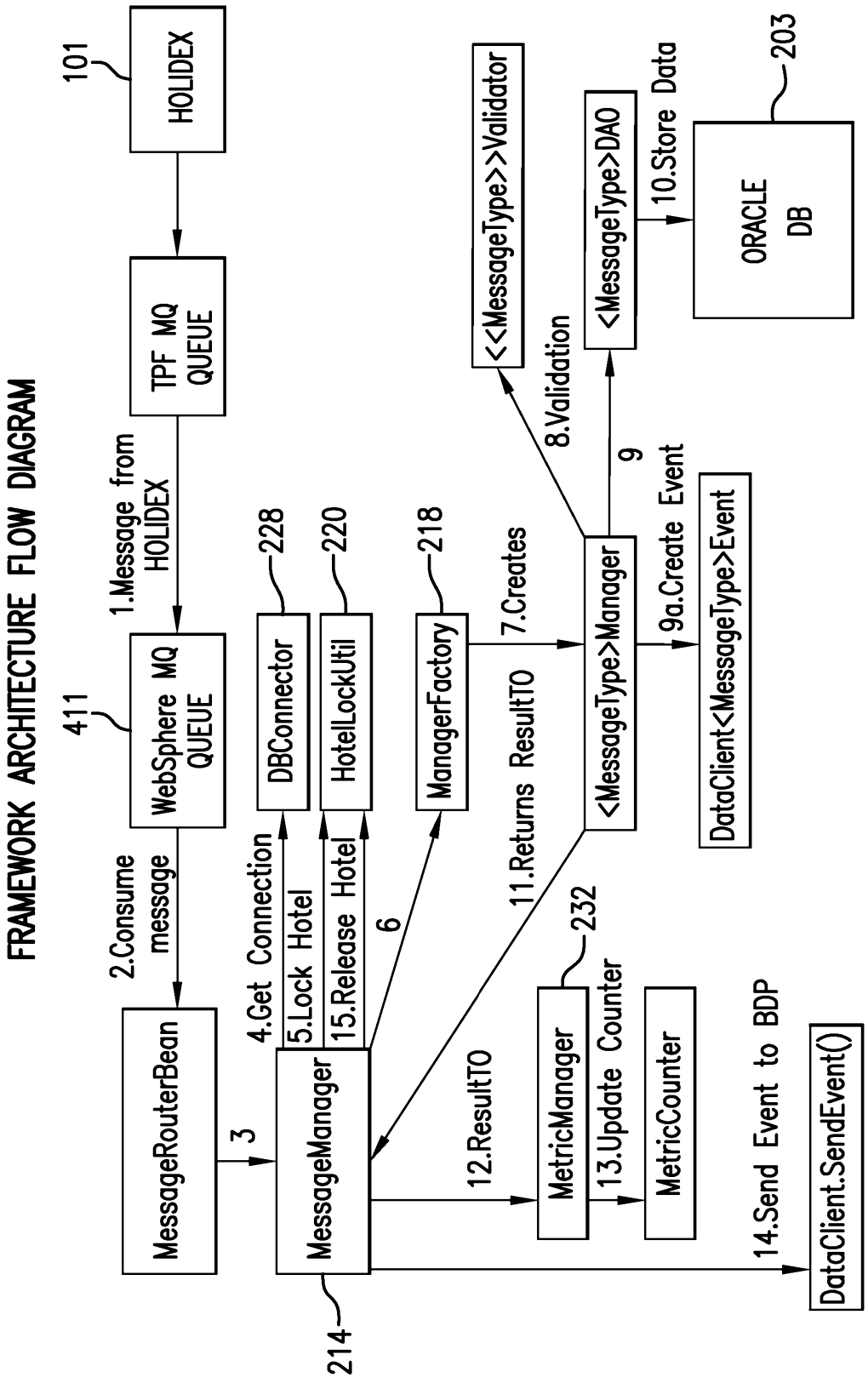
FRAMEWORK ARCHITECTURE FLOW DIAGRAM
HOLIDEX
101
TPF MQ QUEUE
1.Message from HOLIDEX
WebSphere MQ QUEUE
411
2.Consume message
MessageRouterBean
3
MessageManager
214
4.Get Connection
5.Lock Hotel
15.Release Hotel
6
DBConnector
228
HotelLockUtil
220
ManagerFactory
218
7.Creates
11.Returns ResultTO
12.ResultTO
MetricManager
232
13.Update Counter
MetricCounter
14.Send Event to BDP
DataClient.SendEvent()
<<MessageType>>Validator
8.Validation
<MessageType>Manager
9
<MessageType>DAO
10.Store Data
ORACLE DB
203
9a.Create Event
DataClient<MessageType>Event

FIG.4

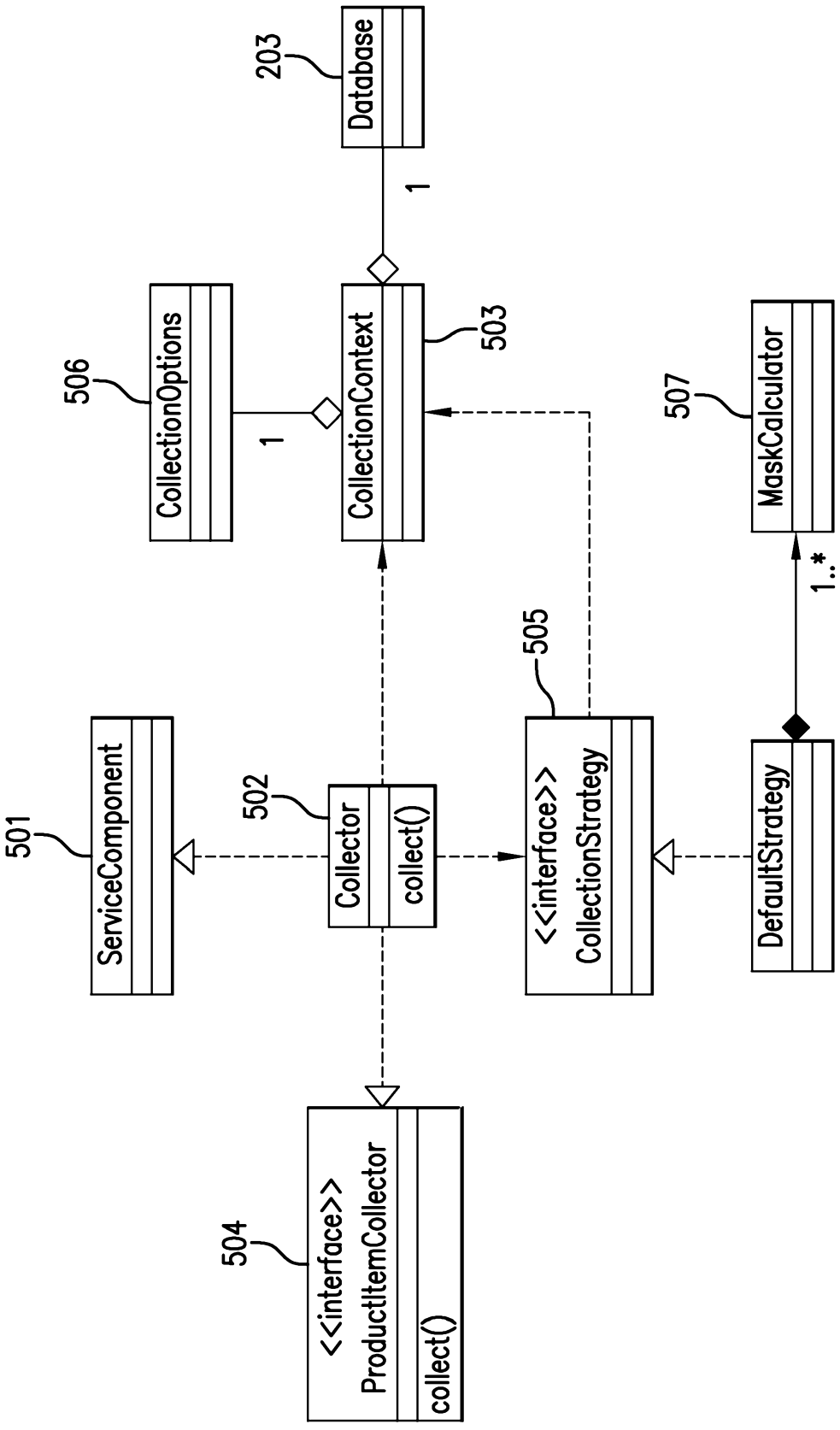
203
Database
1
503
CollectionContext
506
CollectionOptions
1
507
MaskCalculator
1..*
505
501
ServiceComponent
502
Collector
collect()
<<interface>>
CollectionStrategy
DefaultStrategy
504
<<interface>>
ProductItemCollector
collect()

FIG.5

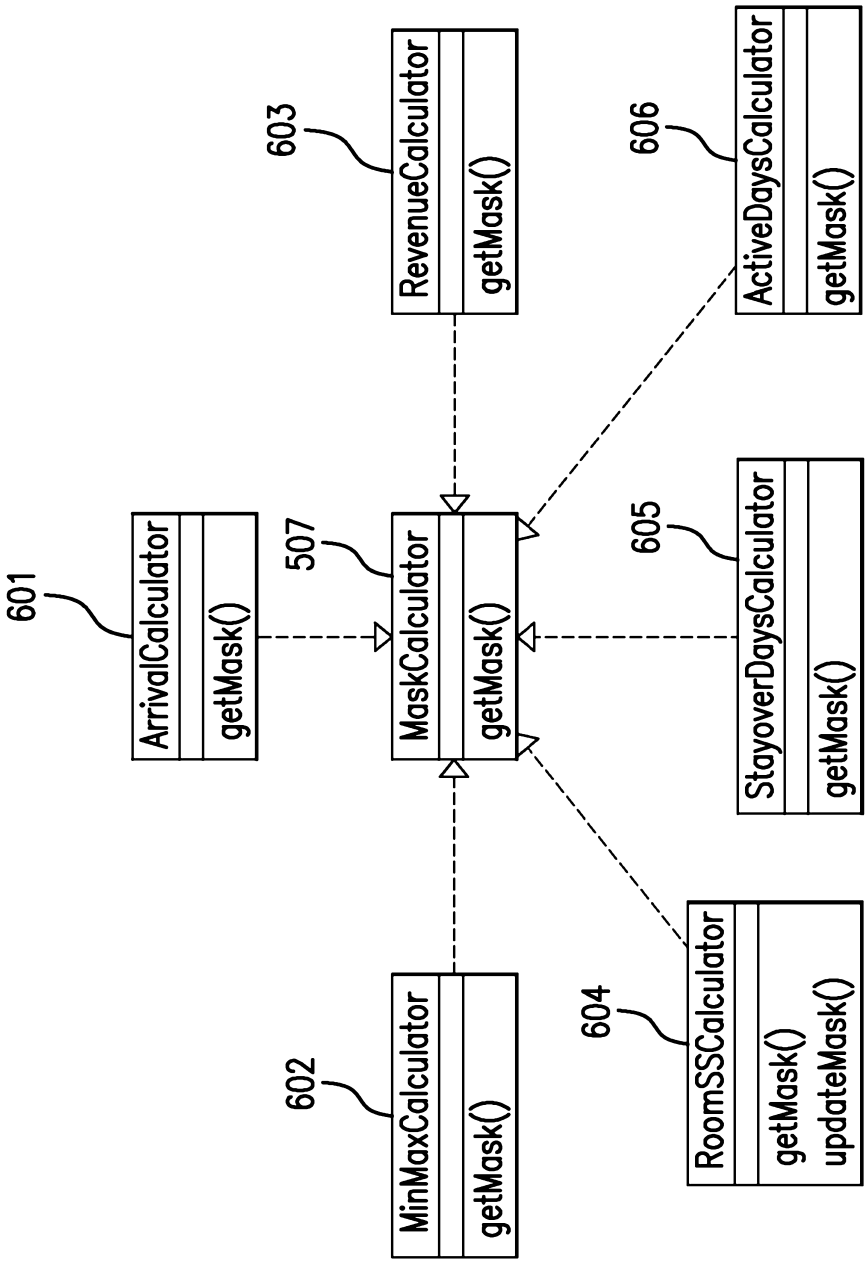
601
ArrivalCalculator
getMask()
507
MaskCalculator
getMask()
603
RevenueCalculator
getMask()
606
ActiveDaysCalculator
getMask()
605
StayoverDaysCalculator
getMask()
602
MinMaxCalculator
getMask()
604
RoomSSCalculator
getMask()
updateMask()

FIG.6

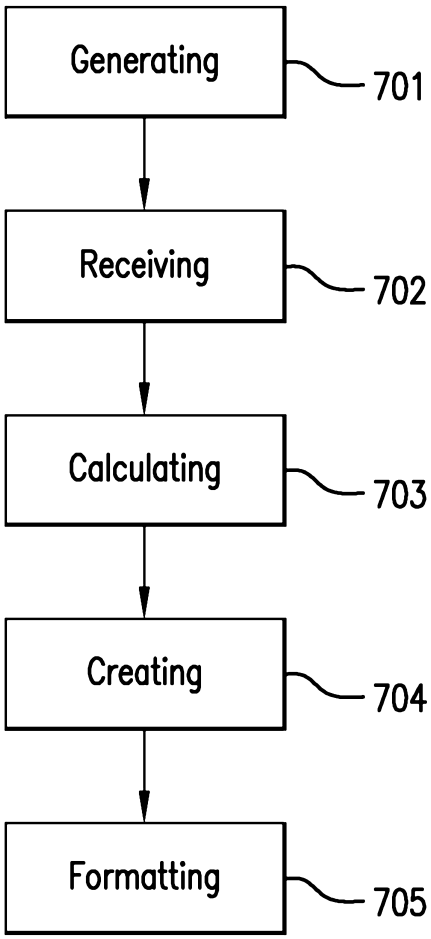
Generating
701
Receiving
702
Calculating
703
Creating
704
Formatting
705

FIG. 7