(19) Europäisches Patentamt
European Patent Office
Office européen des brevets

(11) EP 0 496 296 B1

(12) **EUROPEAN PATENT SPECIFICATION**

(45) Date of publication and mention of the grant of the patent:
27.05.1998 Bulletin 1998/22

(51) Int Cl.[6]: **G06F 3/033**, G06K 9/22

(21) Application number: **92100747.2**

(22) Date of filing: **17.01.1992**

(54) Handwritten information input apparatus

Gerät zur Eingabe handgeschriebener Information

Appareil d'entrée de données manuscrites

(84) Designated Contracting States:
DE FR GB

(30) Priority: **22.01.1991 JP 22803/91**

(43) Date of publication of application:
29.07.1992 Bulletin 1992/31

(73) Proprietor: **SONY CORPORATION**
Tokyo (JP)

(72) Inventor: **Hirayama, Tomoshi, Sony Corporation**
Shinagawa-Ku, Tokyo (JP)

(74) Representative: **Müller, Frithjof E., Dipl.-Ing.**
Patentanwälte
MÜLLER & HOFFMANN,
Innere Wiener Strasse 17
81667 München (DE)

(56) References cited:
EP-A- 0 254 561
EP-A- 0 379 336
DE-A- 3 629 104

Note: Within nine months from the publication of the mention of the grant of the European patent, any person may give notice to the European Patent Office of opposition to the European patent granted. Notice of opposition shall be filed in a written reasoned statement. It shall not be deemed to have been filed until the opposition fee has been paid. (Art. 99(1) European Patent Convention).

EP 0 496 296 B1

Printed by Jouve, 75001 PARIS (FR)

Description

BACKGROUND OF THE INVENTION

1. Field of the Invention

The present invention relates to a handwritten information input apparatus adapted for use in an electronic notebook or the like where characters can be inputted by handwriting with a pen on a specific plate.

2. Description of the Prior Art

Fig. 17 shows an exemplary constitution of a conventional handwritten information input apparatus known heretofore. This apparatus basically consists of an LCD (liquid crystal display) unit and a tablet disposed thereon, wherein a locus traced by a pen is detected from the tablet and, after the locus thus detected is identified by pattern recognition, the character obtained as a result of such recognition is displayed on the LCD unit. More specifically, when a character is inputted by handwriting with an unshown pen in a square 103a on a letter plate 103, the character is identified by pattern recognition and then is displayed in the square 103a. If a write button 102c is touched with the pen when a proper character has been obtained by such pattern recognition, the character in the square 103a is then displayed on a page plate 101. Such display is performed at the position of a cursor 104.

Fig. 17A illustrates an example where characters "BLACK" are displayed on the page plate 101. Suppose now that, in this state, a desired character (character row) is to be deleted. First the pen is brought into touch with a delete button 102b and then is dragged on the character row to be deleted ("LAC" in this example), whereby the character row is displayed with a reversed image as shown in Fig. 17B. After the pen is dragged from one desired character to another desired character, the pen is released upward from the page plate 101, so that the character row is deleted as shown in Fig. 17c.

Now a description will be given on an operation of partially replacing the characters, which are being displayed on the page plate 101, with other characters. In this case, first the character row to be replaced is deleted as mentioned above. After completion of the deletion, a handwrite button 102a is touched with the pen to switch the operation to a character handwrite mode. As shown in Fig. 17C, the cursor 104 is left positionally unchanged despite deletion of the character row. When another character is to be inserted between the characters "B" and "K" in this state, the cursor 104 is shifted to the position between "B" and "K". (Fig. 18A) This shift is realized by touching the space between "B" and "K" with the pen. Subsequently, as shown in Fig. 18B, characters to be inserted (e.g., "A" and "N") are written in the squares 103 on the letter plate 103. And if the write button 102c is touched with the pen when the characters "A" and "N" have been displayed after being correctly identified by pattern recognition, the characters "A" and "N" are inserted at the position of the cursor 104 as shown in Fig. 18C.

In the conventional handwritten information input apparatus, as described above, individually different manipulations are necessary to perform deletion, insertion and correction of characters to eventually raise a problem of low operational efficiency.

From the DE-A-3 629 104 a handwritten information input apparatus is known, which is constructed similarly to the prior art described above, but works that way that every time a character is inputted by handwriting on a letterplate and is identified by pattern recognition, this character is automatically displayed on a page plate. It is not possible to edit a character once displayed on a page plate.

From the EP-A-0 379 336 a display device and a display system incorporating such a device, which may act as a hand-writing input device is disclosed. In the editing mode this device works basically as the prior art described above.

OBJECT AND SUMMARY OF THE INVENTION

It is an object of the present invention to provide an improved handwritten information input apparatus which is capable of deleting, inserting and correcting handwritten characters by mutually similar manipulations.

According to one aspect of the present invention, there is provided a handwritten information input apparatus having a first area traced when characters are written, a second area for displaying the characters written in the first area and decided, and a pen manipulated for writing characters. The apparatus further includes a control means for displaying the character row in the first area when the pen is dragged on the character row displayed in the second area. In this apparatus, a character row in the second area is displayed, in response to a drag of the pen thereon, in the first area. Consequently the deletion, insertion and correction of characters can be performed by similar manipulations.

According to another aspect of the present invention, there is provided a handwritten information input apparatus having a first area traced when characters are written, a second area for displaying the characters written in the first area and decided, a pen manipulated for writing characters, and a write button manipulated when the characters written in the first area are to be displayed in the second region. The apparatus further includes a control means for selecting an editing mode when the pen is dragged on the characters displayed in the second area, and interrupting the editing mode when the write button is touched by the pen in the editing mode. Thus, the operation is switched to the editing mode in response to a drag of the pen on the character row displayed in the second area, and the editing mode

is interrupted in response to a touch of the write button with the pen. Therefore the necessity of additionally providing an edit button can be eliminated to eventually enhance the operational efficiency.

And according to a further aspect of the present invention, there is provided a handwritten information input apparatus having a first area traced when characters are written, a second area for displaying the characters written in the first area and decided, a pen manipulated for writing characters, and a cursor display control circuit for displaying a cursor at the position where the character written in the first area is to be written in the second area. In this apparatus, the cursor is shifted to the position of a drag of the pen. Consequently it becomes possible to distinguish between the drag on the characters and the drag on the cursor without the necessity of additionally providing an edit button in particular, thereby enhancing the operational efficiency.

The above and other features and advantages of the present invention will become apparent from the following description which will be given with reference to the illustrative accompanying drawings.

BRIEF DESCRIPTION OF THE DRAWINGS

Fig. 1 is a perspective view of an exemplary embodiment with the handwritten information input apparatus of the present invention applied to a portable computer;

Fig. 2 is a sectional view showing the structure of an input screen in the embodiment of Fig. 1;

Fig. 3 is a sectional view of an exemplary fluorescent EL plate employed in Fig. 2;

Fig. 4 is a block diagram showing the relationship of electrical connection between an LCD unit and a tablet in Fig. 1;

Fig. 5 is a block diagram showing the entire electrical constitution in the embodiment of Fig. 1;

Fig. 6 is a flow chart of the operation performed in the embodiment of Fig. 5;

Fig. 7 is another flow chart of the operation performed in the embodiment of Fig. 5;

Fig. 8 is a further flow chart of the operation performed in the embodiment of Fig. 5;

Fig. 9 illustrates exemplary display contents on the screen to explain the operation in the embodiment of Fig. 5;

Fig. 10 illustrates exemplary display contents on the screen to explain the operation in the embodiment of Fig. 5;

Fig. 11 illustrates exemplary display contents on the screen to explain the operation in the embodiment of Fig. 5;

Fig. 12 illustrates exemplary display contents on the screen to explain the operation in the embodiment of Fig. 5;

Fig. 13 illustrates exemplary display contents on the screen to explain the operation in the embodiment of Fig. 5;

Fig. 14 illustrates exemplary display contents on the screen to explain the operation in the embodiment of Fig. 5;

Fig. 15 illustrates exemplary display contents on the screen to explain the operation in the embodiment of Fig. 5;

Fig. 16 illustrates exemplary display contents on the screen to explain the operation in the embodiment of Fig. 5;

Fig. 17 illustrates exemplary display contents on the screen to explain a known operation for deletion of characters; and

Fig. 18 illustrates exemplary display contents on the screen to explain a known operation for insertion of characters.

DESCRIPTION OF THE PREFERRED EMBODIMENT

Fig. 1 is a perspective view of a preferred embodiment which represents an example of applying the handwritten information input apparatus of the present invention to an electronic notebook (portable computer). A main body 1 is equipped with a power switch 2 which is turned on when using the apparatus or is turned off for halting the use. Adjacent to the left of the power switch 2, there is provided a luminance adjust switch 3 for adjusting the luminance of a display screen 8 (luminance of an undermentioned LCD unit 22). A case 4 is disposed on one side of the main body 1. In the case 4 is housed, when not in use, a pen 6 having a switch 7 at the fore end and connected via a cord 5 to the main body 1. The pen 6 is so contrived, when taken out of the case 4, as to be placeable in a groove 10 formed horizontally in an upper portion of the main body 1. And at the left of the groove 10, there is disposed a speaker 9 for outputting a predetermined sound.

Two switches 11, 12 are provided in an upper portion on the right side of the main body 1. The switch 11 is used for selectively changing the luminance intensity of an undermentioned back light in two steps for example, and the switch 12 is used for selectively changing, in three steps for example, the volume of the sound outputted from the speaker 9. Another switch 13 provided on the left side of the main body 1 is actuated for interrupting a predetermined operation (e.g., for interrupting the sound being emitted). Also on the left side of the main body 1, there is disposed a socket 14 where a memory IC card 70 (Fig. 5) is loaded. And a socket 15 is provided in a rear portion of the main body 1. Furthermore, another socket 16 is provided in a battery compartment 1a formed in a rear portion of the main body 1 for housing a battery 19. The sockets 15, 16 are so arranged that a cable (e.g. RS232C), a modem, an adaptor and so forth are connectable thereto. And a connection terminal 18 for an AC adaptor 17 is provided in an upper portion on the left side of the main body 1.

Fig. 2 illustrates an exemplary structure of the dis-

play screen 8 in detail. In this embodiment, a tablet 21 (consisting of a tablet 21a for detection of an X-axis position and a tablet 21b for detection of a Y-axis position) is diposed at the top, and an LCD (liquid crystal display) unit 22 is positioned under the tablet 21. The LCD unit 22 consists of upper and lower glass sheets 22a, 22b and a liquid crystal 23 inserted therebetween. And a fluorescent EL plate 26 is disposed under the LCD unit 22. When light is emitted from the fluorescent EL plate 26 serving as a back light, the output light illuminates the LCD unit 22. Since the tablets 21a, 21b are both composed of a transparent material, an image displayed by the liquid crystal 23 can be observed from above in the drawing. Unshown component elements are mounted on a printed circuit board (PCB) 25, which is electrically connected to the LCD unit 22 via a rubber connector 24 while being electrically connected also to the tablet 21 through a conductive film 27.

Fig. 3 shows a detailed structure of the fluorescent EL plate 26. In this embodiment, an insulator film 33 is interposed between an electrode 31 and a light emitter (another electrode) 32, so that when a predetermined voltage is applied between the electrode 31 and the light emitter 32, a light output is produced from the energized emitter 32. Each of the electrode 31 and the light emitter 32 is shaped into a plate so as to be capable of illuminating the screen 8 uniformly.

The back light may be composed of a suitable fluorescent tube as a side light on one side of the main body for illuminating the screen by transmission of a light output therefrom to a rear portion of the LCD unit 22 through a light transmitting member.

Fig. 4 is a circuit diagram showing the principle of positional detection executed by the tablet and that of display by the LCD unit. The tablet 21 has, e.g., 512 electrodes in the X-axis direction and 342 electrodes in the Y-axis direction to realize detection of 512 x 342 pixels. A tablet controller 46 controls a clock generator 45a so that a predetermined voltage is applied sequentially to each of the 342 electrodes. Subsequently another clock generator 45b is controlled, and a predetermined voltage is applied sequentially to each of the 512 electrodes. Consequently, the tablets 21 are scanned by clock signals obtained from the clock generators 45a and 45b. With an approach of the pen 6 to a desired position on the table 21, a predetermined electrostatic capacity is formed between the tablet 21 and the pen 6. And when the pen 6 is depressed to the tablet 21, the switch 7 disposed at the fore end of the pen 6 is turned on to thereby detect the static charge generated between the pen 6 and the relevant electrode on the tablet 21, and the detected charge is supplied via an amplifier 47 to the tablet controller 46. Since the tablet controller 46 functions to control the timing to generate clock signals from the clock generators 45a and 45b, it is possible to detect the position depressed by the pen 6 on the tablet 21 in accordance with both the detection signal supplied from the pen 6 and the clock signal generation timing. Thereafter the tablet controller 46 supplies to a CPU 41 the operational coordinates thus detected by the pen 6.

The CPU 41 controls an LCD controller 43 and writes data, which correspond to an image to be displayed, in a memory (V-RAM) 44. The LCD controller 43 reads the data from the memory 44 and supplies to a driving circuit 42b a signal corresponding to the data. The LCD unit 22 has 512 horizontal electrodes and 342 vertical electrodes correspondingly to the tablet 21. And the driving circuit 42a serves to apply a predetermined voltage sequentially to each of the 342 electrodes. Meanwhile the driving circuit 42b serves to apply a predetermined voltage sequentially to each of the 512 electrodes. Thus the individual pixels on the LCD unit 22 are scanned, and a desired image is displayed on the LCD unit 22.

Fig. 5 shows a further detailed electric constitution in the main body 1. The CPU 41 is connected to various ICs and so forth via a bus line 57. In a ROM 51, there are stored a system program for the entire apparatus, a kana-kanji character conversion program for a word processing function, a dictionary table therefor, a recognition program for a manual write input, a dictionary table therefor and so forth. In a working RAM 52 is stored, when necessary, data needed for the operation. A backup battery 54 (different from the aforementioned battery 19) is connected to a backup RAM 53 so that the required data can be backed up even in case the power supply for the main body of the apparatus is accidentally turned off. A timer IC 55 is connected to the backup battery 54 and counts clock pulses obtained from a quartz vibrator 56, thereby outputting the data of date and a a time at the counting instant. The LCD controller 43 and the tablet controller 46 mentioned above are also connected to the CPU 41 via the bus line 57.

A sound processing circuit 58 generates a predetermined sound signal in response to an input command from any of the sockets 14 through 16 or the CPU 41 and transmits such sound signal to an adder 59. A sound memory 61 is controlled by the CPU 41 and transmits a stored sound (e.g. a warning sound "eh ?") to the adder 59. Then the adder 59 adds the output of the sound processing circuit 58 to the output of the sound memory 61, and transmits the result of such addition to the speaker 9 via a sound volume controller 60. The sound volume can be controlled by actuating a sound select switch 12 connected to the sound controller 60.

The output power of a power circuit 64 (obtained from either the battery 19 or the AC adaptor 17 when the power switch 2 is turned on) is supplied to the fluorescent EL plate (back light) 26 via an inverter circuit 63. The luminous intensity of the fluorescent EL plate 26 can be changed in two steps (e.g., to a value suited for a light room or to another value suited for a dark room) by selectively changing the switch 11. In addition, the luminous intensity of the LCD unit 22 can be controlled to a desired value by controlling the luminance adjust switch

3 separately from the above procedure. A switch 65a is turned on or off in accordance with whether the battery is loaded in the main body 1 is a primary battery or a secondary one. Meanwhile a switch 65b is turned on or off in accordance with the detected capacity of the battery 19. The switches 65a and 65b are connected to a key interface 62 via the power circuit 64. To the key interface 62, there are also connected the aforementioned luminance adjust switch 3, select switch 11 and halt switch 13. The key interface 62 supplies to the CPU 41 a signal corresponding to each on-off action of these switches.

An IC card 70 is connected to the socket 14 so that the CPU 41 is capable of transferring any data and program to or from the IC card 70 via an IC card interface 66. An adaptor 71 is connected to the sockets 15 and 16 in a manner to be further connected to the CPU 41 via an extension interface 68.

Hereinafter the operation for editing characters inputted by handwriting with the pen 6 on the screen 8 will be described with reference to flow charts of Figs. 6 through 8.

First a decision is made in step S1 as to whether a pen-down action has been performed or not. Turn-on of the switch 7 disposed at the fore end of the pen 6 is regarded as a pen-down action, and turn-off of such switch 7 is regarded as a pen-up action. Upon detection of the pen-down action, a decision is made in step S2 as to whether the pen-down position is within the character display area on the note plate 81 (Fig. 9) of the screen 8. Even with the pen-down action, if the position thereof is outside the character display area, the other process is executed in step S3. In case the pen-down position is within the character display area, coordinates XB, YB of the character inputted by the pen-down action is set in a "first character" memory (step S4). Subsequently the character being displayed under the pen 6 is reversed to black. Then a variable XB is set in place of a variable XE, and a variable YB in place of a variable YE, respectively. In the same manner, a variable XB is set in place of a variable XO, and a variable YB in place of-a variable YO, respectively. The variables XE, YE signify coordinates indicating the final drag position of the pen 6, and the variables XO, YO signify final coordinates of the character reversed to be black already.

If no pen-up action is performed after the preceding pen-down action (step S7), a decision is made in step S8 as to whether the pen 6 has been dragged on any other character. In case there is a drag of the pen 6 from the character inputted by the pen-down action, the coordinates of the next character are set as XC, YC (step S9). And the reversed black characters (from XB, YB to XO, YO) are reversed again to former white (step S10). Subsequently in step S11, the characters from coordinates XB, YB to XC, YC are newly reversed to black. Then in step S12, a variable XC is set in place of XO, and a variable YC in place of YO, respectively. In the same manner, a variable XC is set in place of XE, and a variable YC in place of YE, respectively. After execution of such process, the operation reverts to step S7 where a decision is made as to whether a pen-up action has been performed or not.

Due to the procedure mentioned above, all the characters from the pen-down position to the current position-of the pen 6 are displayed always in reversed black.

When the result of the decision in step S7 signifies the presence of a pen-up action, the operation proceeds to step S21 where the character coordinates XE, YE at the pen-up position are set in a "final character" memory. And in step S22, the characters from the coordinates XB, YB to XE, YE are displayed in the squares 83 (Fig. 9) on the letter plate 82.

Thus, when the pen 6 is dragged on any character displayed on the page plate 81, such character is displayed on the letter plate 82. And if a pen-down action is performed again to the character-displayed square 83 on the letter plate 82, the relevant character in the square 83 is deleted therefrom (steps S23 and S24). When a character is written with the pen 6 in any blank square 83 on the letter plate 82, pattern recognition is performed, and a first candidate character obtained as a result of such pattern recognition is displayed in the same square 83. In this stage, the entire candidate characters are displayed in a candidate character display window 87 (Fig. 9) (steps S25 and S26).

Subsequently a decision is made in step S27 as to whether a write button 85 (Fig. 9) has been touched or not with the pen 6. Upon touch of the write button 85, the characters (from the coordinates XB, YB to XE, YE) displayed in reversed black on the note plate 81 are deleted therefrom. And the other characters being displayed on the letter plate 82 are inserted in the positions of the deleted characters (step S31). In this stage, the characters that have been displayed on the letter plate 82 until then are deleted therefrom (step S32).

If the result of the decision in step S27 signifies the absence of a touch of the write button 85 with the pen 6, the operation proceeds to step S28 where a decision is made as to whether the delete button 86 has been touched or not. And if the result of such decision signifies the absence of a touch of the delete button 86, the operation proceeds to step S29 for execution of the other process and then reverts to step S23. In case the result of the decision signifies the presence of a touch of the delete button 86, the entire characters on the letter plate 82 are deleted therefrom, and the characters on the note plate 81 are released from the reversed display state (step S30).

Referring now to Figs. 9 through 16, the above operation will be described in further detail on the basis of practical display contents on the screen.

In Fig. 9, characters "THIS IS A GOOD BOOK" are displayed on the note plate 81 (second area), and the cursor 84 is displayed in an end portion thereof. And the letter plate 82 (first area) having eight squares 83, a write button 85, a delete button 86 and a candidate char-

acter display window 87 is displayed on the note plate 81. In this example, nothing is displayed now in the squares 83 and the candidate character display window 87.

Fig. 10 shows an exemplary case where a pen-down action is performed on the character "B" displayed on the page plate 81, and the pen 6 is dragged to the character "K" spaced apart therefrom rightward by four characters. The pen-dragged characters are reversed to black and are displayed also in the squares 83 on the letter plate 82. In the state of Fig. 10, if any character-displayed square 83 on the letter plate 82 is touched with the pen 6, the character in that square 83 is deleted therefrom as shown in Fig. 11. And when the write button 85 is touched with the pen 6 as shown in Fig. 12, the reverse-image characters displayed on the page plate 81 in Fig. 11 are deleted therefrom (the blank characters displayed in the squares 83 are inserted).

Subsequently, if the pen 6 is dragged on the characters "GOOD" in the state of Fig. 13 where the characters "THIS IS A GOOD BOOK" are displayed on the page plate 81, the relevant characters are reversed to black as shown in Fig. 14 while being displayed also in the squares 83. When characters for correction are sequentially written in the squares 83 on the letter plate 82, the characters previously written are deleted therefrom, and then the newly written characters are displayed after being identified by pattern recognition (Fig. 15). In this example, the characters "NEW GOOD" are written in place of the characters "GOOD". When the write button 85 is touched with the pen 6 after the characters for correction have been written, the characters "NEW GOOD" are displayed at the positions of the preceding characters "GOOD", as shown in Fig. 16. And the characters in the squares 83 are deleted therefrom.

In this manner, it is possible to perform deletion, insertion and correction of characters by similar manipulations.

In the above embodiment, if the pen 6 is dragged to the characters displayed on the page plate 81, the operation is switched automatically to an editing mode, and the pen-dragged characters are displayed in the squares 83. And when the write button 85 is touched with the pen 6 in the editing mode, the characters in the squares 83 are displayed on the page plate 81 to thereby terminate the editing mode. Due to the procedure mentioned, it becomes possible to eliminate the necessity of particularly displaying "edit button" on the screen 8, hence realizing effective use of the display area of the screen 8 with another advantage of enhancing the operational efficiency.

In the above constitution where an editing mode button is not provided and the operation is switched to an editing mode in response to a drag of the pen 6 to the character on the page plate 81, the operational efficiency may be deteriorated if the pen 6 is moved to touch the position between desired characters to shift the cursor 84 to such position as in the conventional apparatus. More specifically, in case the pen 6 is brought into touch directly with the character in error instead of touch with the inter-character position, it follows that such action is regarded as a drag to the character instead of a shift of the cursor 84. For the purpose of averting such a fault, it is preferred that the cursor 84 be shiftable to a desired position by first moving the pen 6 down to the cursor 84, then dragging the pen 6 to the desired position, and lifting up the pen 6 therefrom (to drag the cursor). Fig. 8 shows the operating procedure for shifting the cursor in the manner described.

In step S41, a decision is made as to whether a pen-down action has been performed or not. And the operation proceeds to step S42 in response to the absence of a pen-down action for execution of the other process. If the result of the decision signifies the presence of a pen-down action, the operation proceeds to step S43 where a decision is made as to whether the pen-down action is on any character or not. If the result of such decision signifies that the pen-down action is on any character, the operation proceeds to step S44 to select a character editing mode. In case the result of the decision signifies that the pen-down action is not on any character, the operation proceeds to step S45 where a decision is made as to whether the pen-down action is on the cursor 84 or not. And if the pen-down position is neither on any character nor on the cursor, the cursor is jumped to that position (step S46).

Thereafter the operation proceeds to step S47 where a decision is made as to whether a pen-up action has been performed or not. If the result of such decision signifies the absence of a pen-up action, the operation proceeds to step S48, so that the cursor is jumped to the position of the fore end of the pen and is displayed thereat. In case the pen-down position is on the cursor, the operation proceeds from step S45 to step S47, where the cursor 84 can be shifted to the desired position by moving the pen 6 while pressing the same to the page plate 81. And when the pen 6 is lifted up at the desired position, the cursor is displayed with on-off flashing at the pen-up position (step S49).

As described hereinabove, according to the handwritten information input apparatus of the present invention, a character row in the second area is displayed in the first area when the pen is dragged thereon, so that deletion, insertion and correction of the characters can be executed by similar manipulations.

Furthermore, when the pen is dragged on a character row displayed in the second area, the operation is switched to an editing mode. And the editing mode is interrupted in response to a touch of the write button with the pen, thereby eliminating the necessity of additionally providing an editing mode button to consequently realize effective utilization of the screen space while enhancing the operational efficiency.

In addition, the cursor is shifted with a drag of the pen and is jumped to the position of termination of such drag, whereby an edit mode can be selected without the

necessity of providing an editing mode button, and the manipulation for jumping the cursor to the desired position can be facilitated.

Claims

1. A handwritten information input apparatus comprising:

   a pen (6,7) for inputting character information by handwriting;
   a tablet (21) traceable by said pen (6,7) and adapted for detection of the trace information inputted by said pen (6,7);
   a display unit (22) provided under said tablet (21) for displaying an image visibly through said tablet (21);
   a first area (82) defined on said tablet (21) for inputting the trace information by said pen (6,7); and
   a second area (81) defined on said display unit (22) for displaying characters generated by pattern recognition of the trace information written in said first area (82);

   characterized by

   a controller (41) for displaying a desired character in said first area (82) on said display unit (22) when said pen (6,7) is dragged on a portion of said tablet (21) corresponding to said desired character displayed in said second area (81).

2. The handwritten information input apparatus according to claim 1, wherein the first area (82) on said tablet (21) and the second area (81) on said display unit (22) are formed to be different from each other.

3. The handwritten information input apparatus according to claim 1, wherein a letter area (82) is displayed on said display unit (22) correspondingly to said first area (82) as a guide for inputting the trace information.

4. The handwritten information input apparatus according to claim 3, wherein said letter area (82) is displayed in a window region.

5. The handwritten information input apparatus according to claim 3, wherein said desired character is displayed in said letter area (82).

6. The handwritten information input apparatus according to claim 5, wherein, when said desired character displayed in said letter area (82) is touched by said pen (6,7), said desired character is deleted.

7. A handwritten information input apparatus comprising:

   a pen (6,7) for inputting character information by handwriting;
   a tablet (21) traceable by said pen (6,7) and adapted for detection of the trace information inputted by said pen (6,7);
   a display unit (22) provided under said tablet (21) for displaying an image visibly through said tablet (21);
   a first area (82) defined on said tablet (21) for inputting the trace information by said pen (6,7);
   a second area (81) defined on said display unit (22) for displaying characters generated by pattern recognition of the trace information written in said first area (82); and
   an operating key (85) so actuated that the character generated in said first area (82) is displayed in said second area (81); characterized by
   a controller (41) for starting an editing mode when said pen (6,7) is dragged on a portion of said tablet (21) corresponding to said desired character displayed in said second area (81), and for interrupting the editing mode when said operating key (85) is actuated by said pen (6,7).

8. The handwritten information input apparatus according to claim 7, wherein said controller (41) so operates that, when the editing mode is started, said pen-dragged desired character in said second area (81) is posted to and displayed in said first area (82), whereby said desired character thus posted from said second area (81) is edited in said first area (82).

9. The handwritten information input apparatus according to claim 8, wherein said editing operation is performed in the window region.

10. A handwritten information input apparatus according to any one of the preceeding claims, comprising:

    a controller (41) for displaying a cursor at a desired position in said second area (81) where the character generated in said first area (82) is to be posted, said controller (41) operating in such a manner that, when said pen (6, 7) is dragged on the cursor, said cursor is shifted to a desired position determined by the tip of said pen (6, 7).

Patentansprüche

1. Gerät zur Eingabe handgeschriebener Information,

mit:

einem Griffel (6, 7) zur Eingabe von Buchstabeninformation mittels Handschrift;
einer Tafel (21), auf die mittels des Griffels (6, 7) eine Spur gezogen werden kann und die die durch den Griffel (6,7) eingegebene Spurinformation detektieren kann;
einer unter der Tafel (21) angebrachten Anzeigeeinheit (22), um ein Bild durch die Tafel (21) sichtbar darzustellen;
einem auf der Tafel (21) definierten ersten Bereich (82), um die Spurinformation mittels des Griffels (6, 7) einzugeben; und
einem auf der Anzeigeeinheit (22) definierten zweiten Bereich (81), um durch Mustererkennung aus der in den ersten Bereich (82) geschriebenen Spurinformation erzeugte Schriftzeichen darzustellen;

gekennzeichnet durch

eine Steuereinheit (41) um ein gewünschtes Schriftzeichen in dem ersten Bereich (82) auf der Anzeigeeinheit (22) darzustellen, wenn der Griffel (6, 7) über einen Bereich der Tafel (21) gezogen wird, der zu dem in dem zweiten Bereich (81) dargestellten gewünschten Schriftzeichen korrespondiert.

2. Gerät zur Eingabe handgeschriebener Information nach Anspruch 1, bei dem der erste Bereich (82) auf der Tafel (21) und der zweite Bereich (81) auf der Anzeigeeinheit (22) zueinander unterschiedlich gebildet sind.

3. Gerät zur Eingabe handgeschriebener Information nach Anspruch 1, bei dem als Führung zur Eingabe der Spurinformation auf der Anzeigeeinheit (21) ein zu dem ersten Bereich (82) korrespondierender Buchstabenbereich (82) dargestellt wird.

4. Gerät zur Eingabe handgeschriebener Information nach Anspruch 3, bei dem der Buchstabenbereich (82) in einem Fensterbereich dargestellt wird.

5. Gerät zur Eingabe handgeschriebener Information nach Anspruch 3, bei dem das gewünschte Schriftzeichen in dem Buchstabenbereich (82) dargestellt wird.

6. Gerät zur Eingabe handgeschriebener Information nach Anspruch 5, bei dem das in dem Buchstabenbereich (82) dargestellte gewünschte Schriftzeichen bei einer Berührung durch den Griffel (6, 7) gelöscht wird.

7. Gerät zur Eingabe handgeschriebener Information,

mit:

einem Griffel (6, 7) zur Eingabe von Buchstabeninformation mittels Handschrift;
einer Tafel (21), auf die mittels des Griffels (6, 7) eine Spur gezogen werden kann und die die durch den Griffel (6,7) eingegebene Spurinformation detektieren kann;
einer unter der Tafel (21) angebrachten Anzeigeeinheit (22), um ein Bild durch die Tafel (21) sichtbar darzustellen;
einem auf der Tafel (21) definierten ersten Bereich (82), um die Spurinformation mittels des Griffels (6, 7) einzugeben;
einem auf der Anzeigeeinheit (22) definierten zweiten Bereich (81), um durch Mustererkennung aus der in den ersten Bereich (82) geschriebenen Spurinformation erzeugte Schriftzeichen darzustellen; und
einer Bedientaste (85), die betätigt wird, damit das in dem ersten Bereich (82) dargestellte Schriftzeichen in dem zweiten Bereich (81) dargestellt wird;

gekennzeichnet durch

eine Steuereinheit (41) um einen Korrekturmodus einzuschalten, wenn der Griffel (6, 7) über einen Bereich der Tafel (21) gezogen wird, der zu dem in dem zweiten Bereich (81) dargestellten gewünschten Schriftzeichen korrespondiert, und zur Unterbrechung des Korrekturmodus, wenn die Bedientaste (85) durch den Griffel (6, 7) betätigt wird.

8. Gerät zur Eingabe handgeschriebener Information nach Anspruch 7, bei dem die Steuereinheit (41) so arbeitet, daß das von dem Griffel überzogene gewünschte Schriftzeichen in dem zweiten Bereich (81) bei dem Einschalten des Korrekturmodus in den ersten Bereich (82) verschoben und dort dargestellt wird, wodurch das so aus dem zweiten Bereich (81) verschobene gewünschte Schriftzeichen in dem ersten Bereich (82) korrigiert wird.

9. Gerät zur Eingabe handgeschriebener Information nach Anspruch 8, bei dem das Korrigieren in dem Fensterbereich durchgeführt wird.

10. Gerät zur Eingabe handgeschriebener Information nach einem der vorhergehenden Ansprüche, mit:

einer Steuereinheit (41) zur Darstellung eines Cursors an einer gewünschten Position in dem zweiten Bereich (81), an die das in dem ersten Bereich (82) erzeugte Schriftzeichen verschoben werden soll, wobei die Steuereinheit (41) so arbeitet, daß der Cursor auf eine durch die

Spitze des Griffels (6, 7) bestimmte gewünschte Position verschoben wird, wenn der Cursor mit dem Griffel (6, 7) gezogen wird.

Revendications

1. Appareil d'entrée d'information manuscrite comprenant :

   un crayon (6, 7) pour entrer une information de caractère de façon manuscrite ;
   une tablette (21) qui peut recevoir un tracé au moyen dudit crayon (6, 7) et adaptée pour la détection de l'information de tracé entrée au moyen dudit crayon (6, 7) ;
   une unité d'affichage (22) prévue sous ladite tablette (21) pour afficher une image qui soit visible au travers de ladite tablette (21) ;
   une première zone (82) définie sur ladite tablette (21) pour entrer l'information de tracé au moyen dudit crayon (6, 7) ; et
   une seconde zone (81) définie sur ladite unité d'affichage (22) pour afficher des caractères générés au moyen d'une reconnaissance de forme de l'information de tracé écrite dans ladite première zone (82),

   caractérisé par :

   un contrôleur (41) pour afficher un caractère souhaité dans ladite première zone (82) sur ladite unité d'affichage (22) lorsque ledit crayon (6, 7) est glissé sur une partie de ladite tablette (21) correspondant audit caractère souhaité affiché dans ladite seconde zone (81).

2. Appareil d'entrée d'information manuscrite selon la revendication 1, dans lequel la première zone (82) sur ladite tablette (21) et la seconde zone (81) sur ladite unité d'affichage (22) sont formées de manière à être différentes l'une de l'autre.

3. Appareil d'entrée d'information manuscrite selon la revendication 1, dans lequel une zone de lettres (82) est affichée sur ladite unité d'affichage (22) en correspondance avec ladite première zone (82) en tant que guide pour entrer l'information de tracé.

4. Appareil d'entrée d'information manuscrite selon la revendication 3, dans lequel ladite zone de lettres (82) est affichée dans une région de fenêtre.

5. Appareil d'entrée d'information manuscrite selon la revendication 3, dans lequel ledit caractère souhaité est affiché dans ladite zone de lettres (82).

6. Appareil d'entrée d'information manuscrite selon la revendication 5, dans lequel, lorsque ledit caractère souhaité affiché dans ladite zone de lettres (82) est appuyé par ledit crayon (6, 7), ledit caractère souhaité est supprimé.

7. Appareil d'entrée d'information manuscrite comprenant :

   un crayon (6, 7) pour entrer une information de caractère de façon manuscrite ;
   une tablette (21) qui peut recevoir un tracé au moyen dudit crayon (6, 7) et adaptée pour la détection de l'information de tracé entrée au moyen dudit crayon (6, 7) ;
   une unité d'affichage (22) prévue sous ladite tablette (21) pour afficher une image qui soit visible au travers de ladite tablette (21) ;
   une première zone (82) définie sur ladite tablette (21) pour entrer l'information de tracé au moyen dudit crayon (6, 7) ; et
   une seconde zone (81) définie sur ladite unité d'affichage (22) pour afficher des caractères générés au moyen d'une reconnaissance de forme de l'information de tracé écrite dans ladite première zone (82), et
   une touche d'opération (85) actionnée de telle sorte que le caractère généré dans ladite première zone (82) soit affiché dans ladite seconde zone (81),

   caractérisé par :

   un contrôleur (41) pour démarrer un mode édition lorsque ledit crayon (6, 7) est glissé sur une partie de ladite tablette (21) correspondant audit caractère souhaité affiché dans ladite seconde zone (81) et pour interrompre le mode édition lorsque ladite touche d'opération (85) est activée par ledit crayon (6, 7).

8. Appareil d'entrée d'information manuscrite selon la revendication 7, dans lequel ledit contrôleur (41) fonctionne de telle sorte que, lorsque le mode édition est démarré, ledit caractère souhaité couvert par le glissement du crayon dans ladite seconde zone (81) soit enregistré sur et affiché dans ladite première zone (82) et ainsi, ledit caractère souhaité ainsi enregistré à partir de ladite seconde zone (81) est édité dans ladite première zone (82).

9. Appareil d'entrée d'information manuscrite selon la revendication 8, dans lequel ladite opération d'édition est réalisée dans la région de fenêtre.

10. Appareil d'entrée d'information manuscrite selon l'une quelconque des revendications précédentes comprenant :

un contrôleur (41) pour afficher un curseur en une position souhaitée dans ladite seconde zone (81) où le caractère généré dans ladite première zone (82) doit être enregistré, ledit contrôleur (41) fonctionnant de telle sorte que, lorsque ledit crayon (6, 7) est glissé sur le curseur, ledit curseur soit décalé jusqu'à une position souhaitée déterminée par la pointe dudit crayon (6, 7).

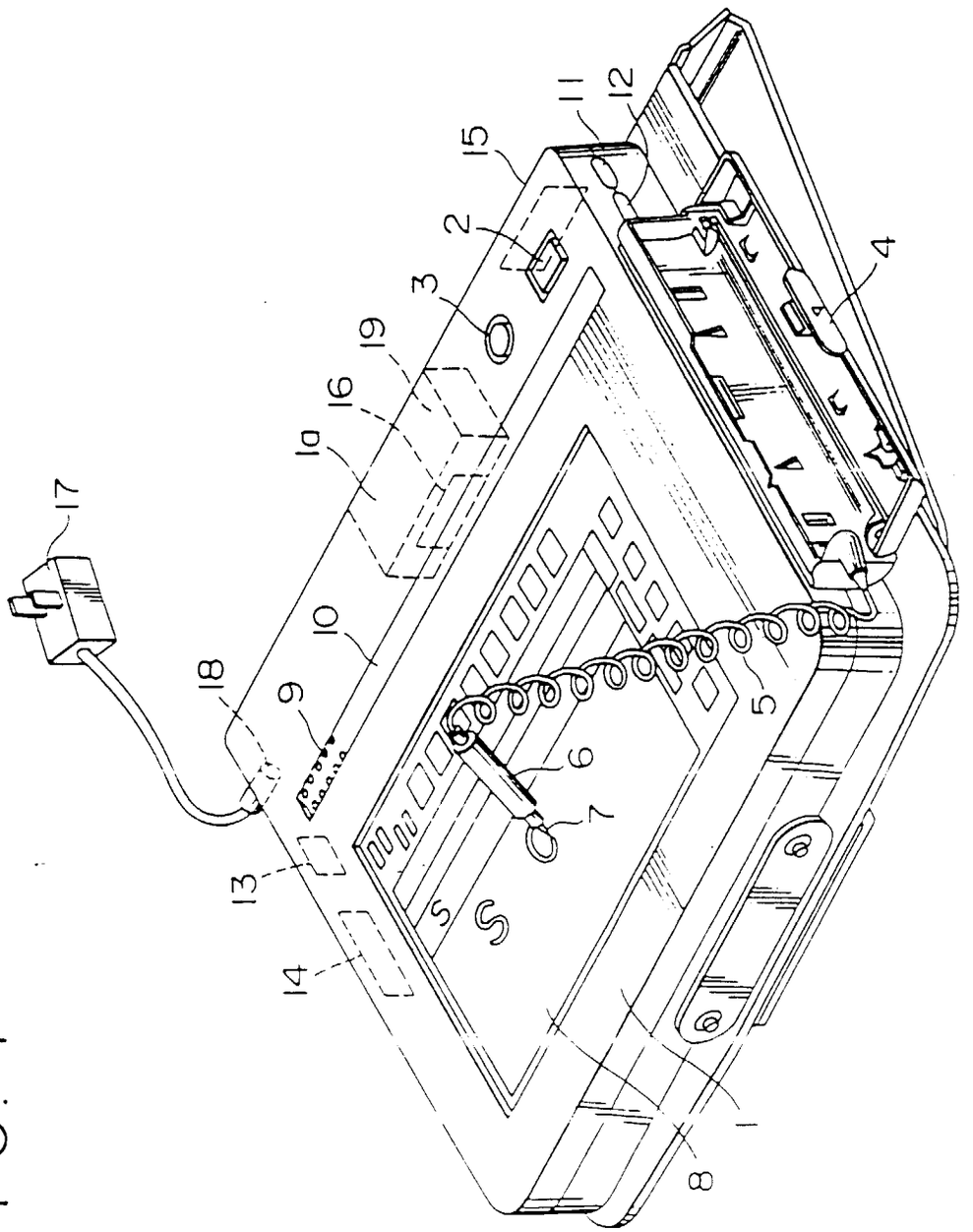

FIG. 1

FIG. 2

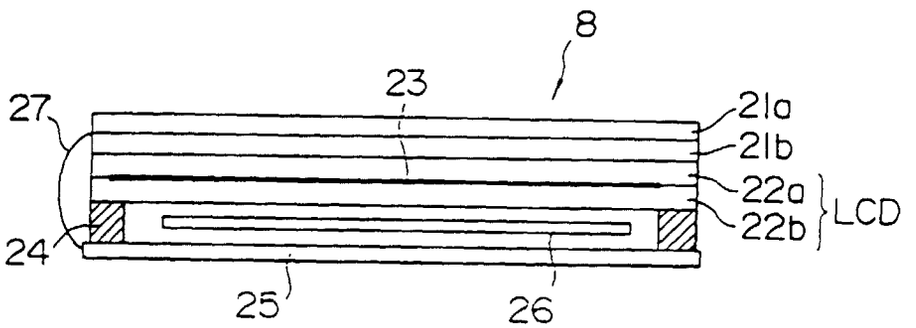

FIG. 3

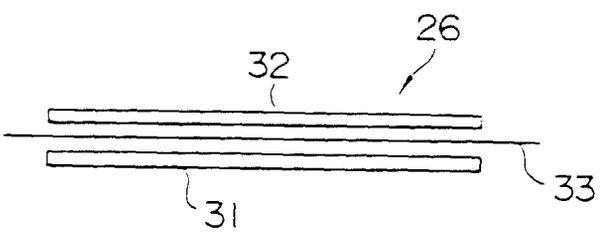

FIG. 4

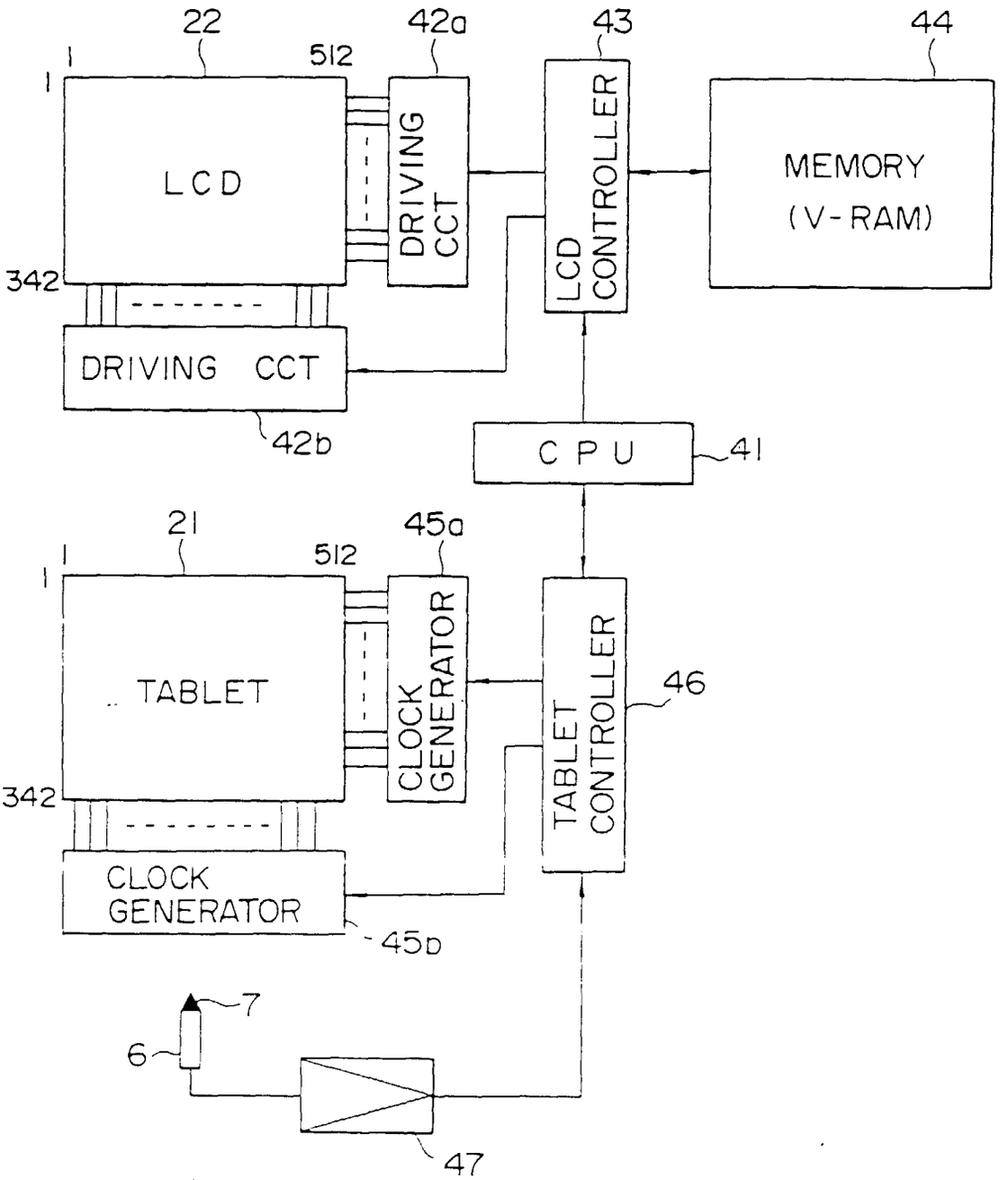
22
42a
43
44
1
512
1
LCD
DRIVING CCT
LCD CONTROLLER
MEMORY (V-RAM)
342
DRIVING CCT
42b
CPU
41
21
45a
1
512
1
TABLET
CLOCK GENERATOR
TABLET CONTROLLER
46
342
CLOCK GENERATOR
45b
7
6
47

FIG. 5

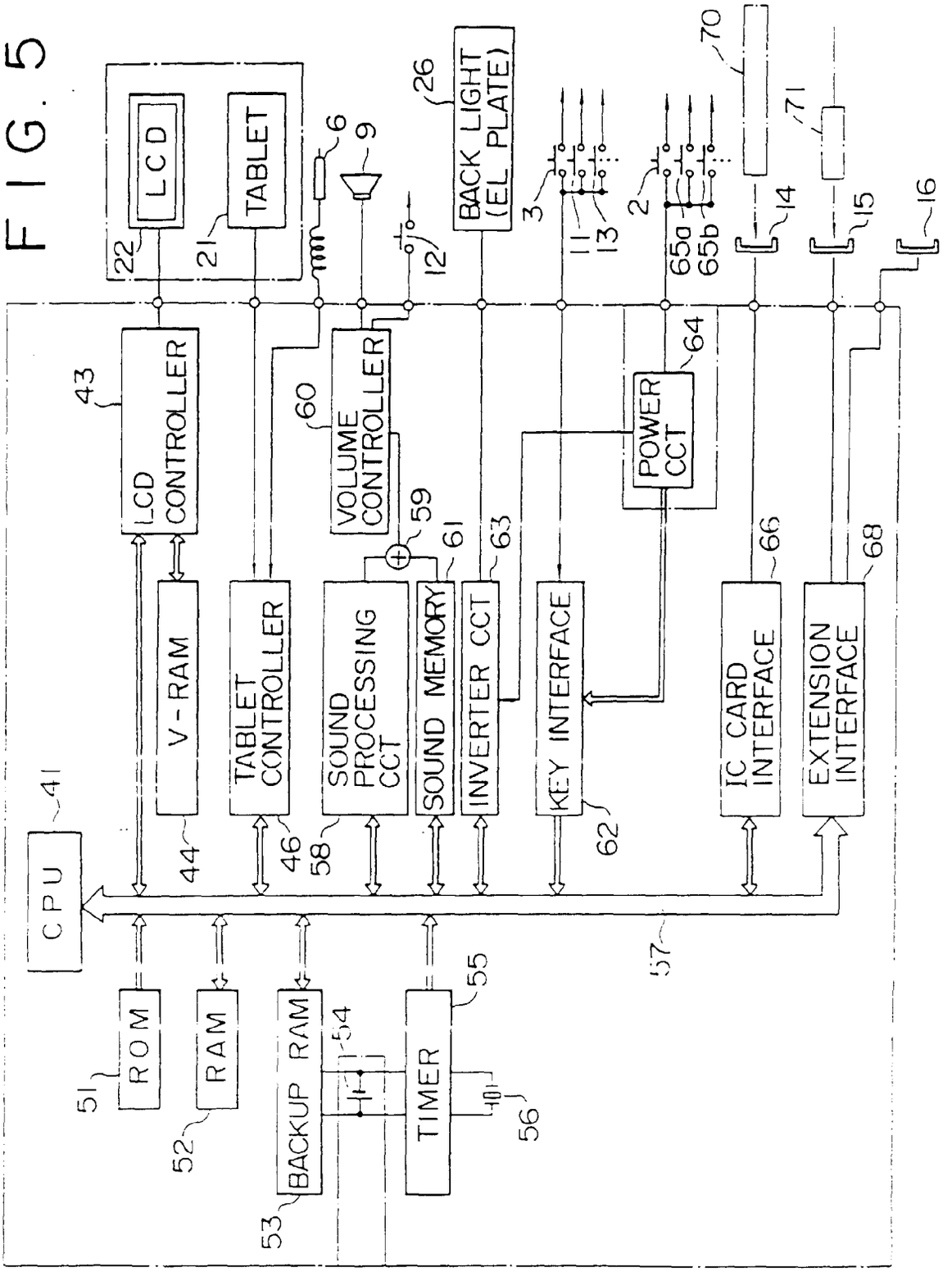
CPU
41
ROM
51
RAM
52
BACKUP RAM
53
54
TIMER
55
56
57
LCD CONTROLLER
43
V-RAM
44
TABLET CONTROLLER
46
SOUND PROCESSING CCT
58
VOLUME CONTROLLER
60
59
SOUND MEMORY
61
INVERTER CCT
63
KEY INTERFACE
62
POWER CCT
64
IC CARD INTERFACE
66
EXTENSION INTERFACE
68
LCD
22
TABLET
21
6
9
12
BACK LIGHT (EL PLATE)
26
3
11
13
2
65a
65b
14
70
71
15
16

FIG. 6

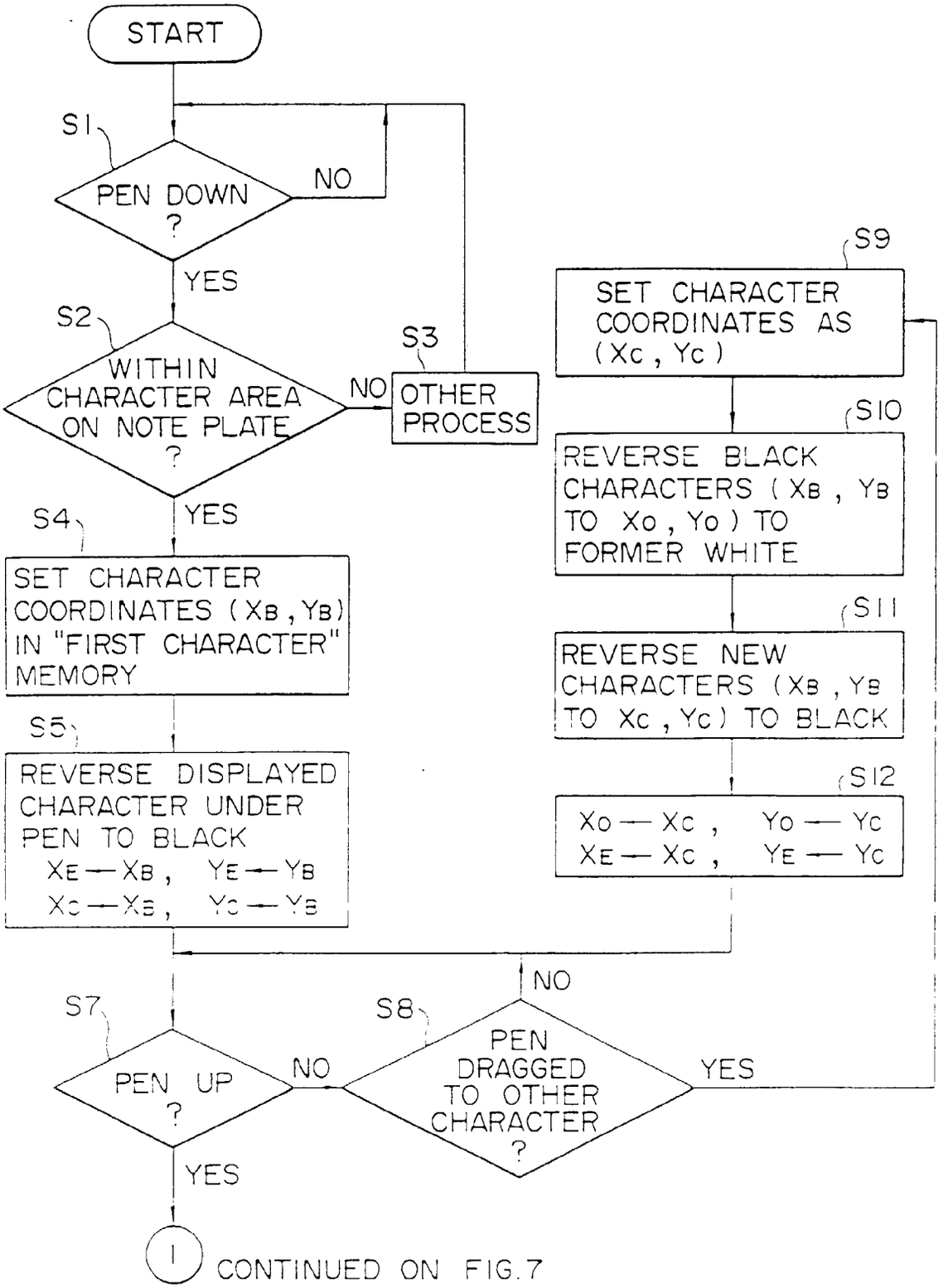
START
S1
PEN DOWN ?
NO
YES
S2
WITHIN CHARACTER AREA ON NOTE PLATE ?
NO
S3
OTHER PROCESS
YES
S4
SET CHARACTER COORDINATES (XB, YB) IN "FIRST CHARACTER" MEMORY
S5
REVERSE DISPLAYED CHARACTER UNDER PEN TO BLACK
XE — XB, YE — YB
XC — XB, YC — YB
S9
SET CHARACTER COORDINATES AS (XC, YC)
S10
REVERSE BLACK CHARACTERS (XB, YB TO XO, YO) TO FORMER WHITE
S11
REVERSE NEW CHARACTERS (XB, YB TO XC, YC) TO BLACK
S12
XO — XC, YO — YC
XE — XC, YE — YC
NO
S7
PEN UP ?
NO
S8
PEN DRAGGED TO OTHER CHARACTER ?
YES
YES
1
CONTINUED ON FIG.7

FIG. 7

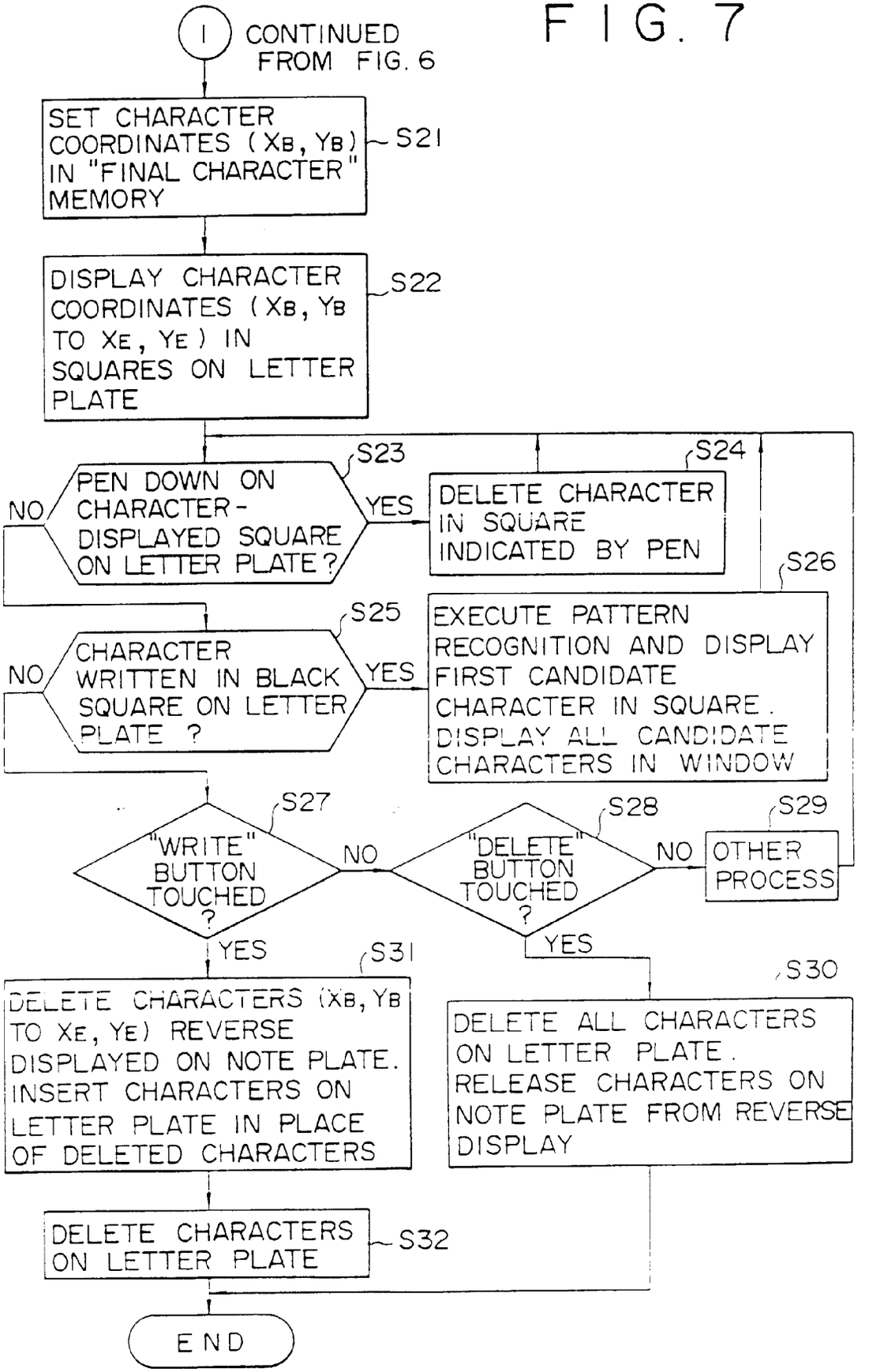
1
CONTINUED FROM FIG. 6
SET CHARACTER COORDINATES (XB, YB) IN "FINAL CHARACTER" MEMORY
S21
DISPLAY CHARACTER COORDINATES (XB, YB TO XE, YE) IN SQUARES ON LETTER PLATE
S22
S23
PEN DOWN ON CHARACTER-DISPLAYED SQUARE ON LETTER PLATE?
NO
YES
S24
DELETE CHARACTER IN SQUARE INDICATED BY PEN
S25
CHARACTER WRITTEN IN BLACK SQUARE ON LETTER PLATE ?
NO
YES
S26
EXECUTE PATTERN RECOGNITION AND DISPLAY FIRST CANDIDATE CHARACTER IN SQUARE. DISPLAY ALL CANDIDATE CHARACTERS IN WINDOW
S27
"WRITE" BUTTON TOUCHED ?
NO
S28
"DELETE" BUTTON TOUCHED ?
NO
S29
OTHER PROCESS
YES
S31
DELETE CHARACTERS (XB, YB TO XE, YE) REVERSE DISPLAYED ON NOTE PLATE. INSERT CHARACTERS ON LETTER PLATE IN PLACE OF DELETED CHARACTERS
YES
S30
DELETE ALL CHARACTERS ON LETTER PLATE. RELEASE CHARACTERS ON NOTE PLATE FROM REVERSE DISPLAY
DELETE CHARACTERS ON LETTER PLATE
S32
END

FIG. 8

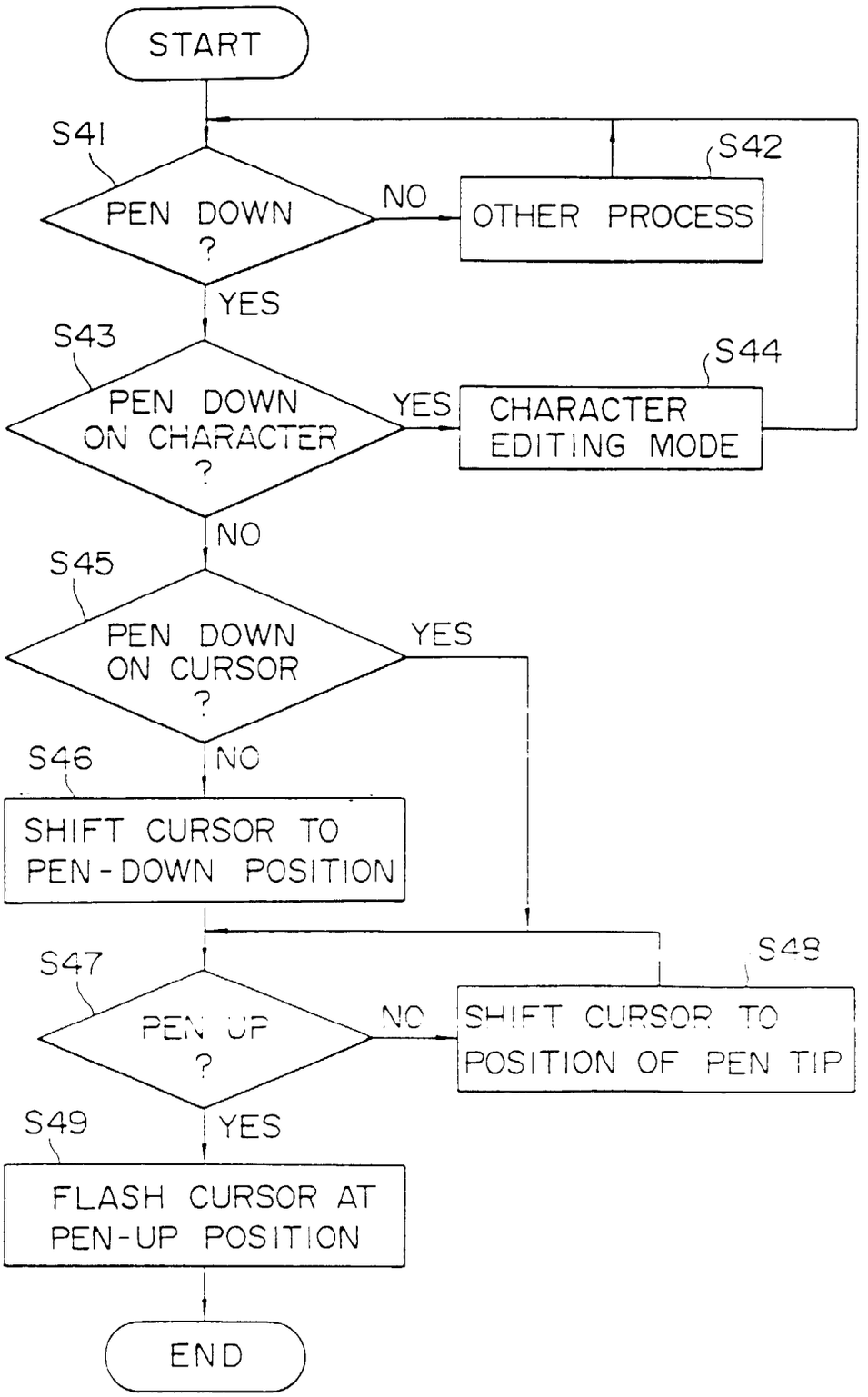
START
S41
PEN DOWN ?
NO
S42
OTHER PROCESS
YES
S43
PEN DOWN ON CHARACTER ?
YES
S44
CHARACTER EDITING MODE
NO
S45
PEN DOWN ON CURSOR ?
YES
S46
NO
SHIFT CURSOR TO PEN-DOWN POSITION
S47
PEN UP ?
NO
S48
SHIFT CURSOR TO POSITION OF PEN TIP
S49
YES
FLASH CURSOR AT PEN-UP POSITION
END

FIG. 9

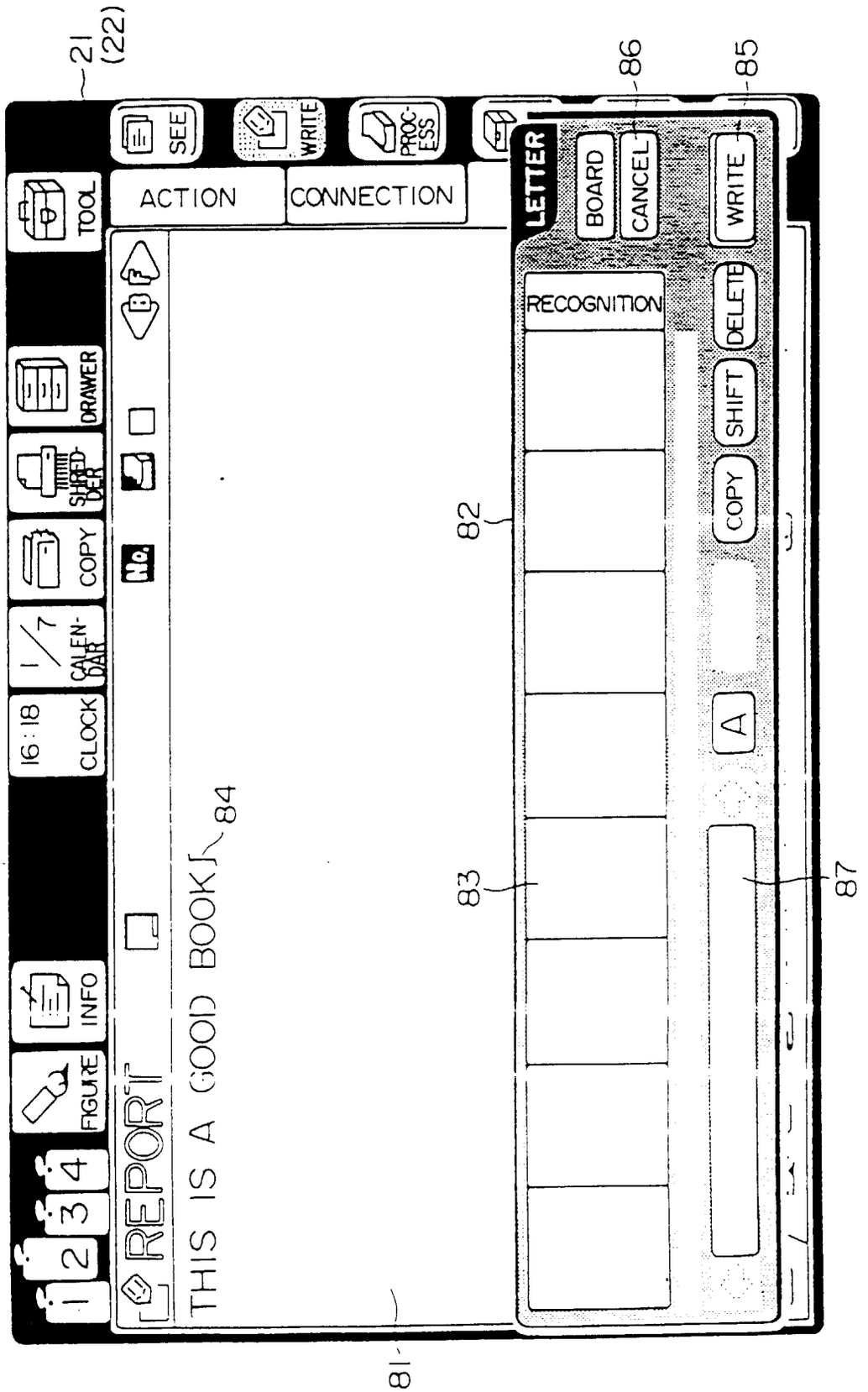
21
(22)
86
85
TOOL
SEE
WRITE
PROC-ESS
ACTION
CONNECTION
LETTER
BOARD
CANCEL
WRITE
DRAWER
SHRED-DER
COPY
CALEN-DAR
CLOCK
16:18
1/7
No.
RECOGNITION
DELETE
SHIFT
COPY
A
FIGURE
INFO
1
2
3
4
REPORT
THIS IS A GOOD BOOK
84
82
83
87
81

FIG. 10

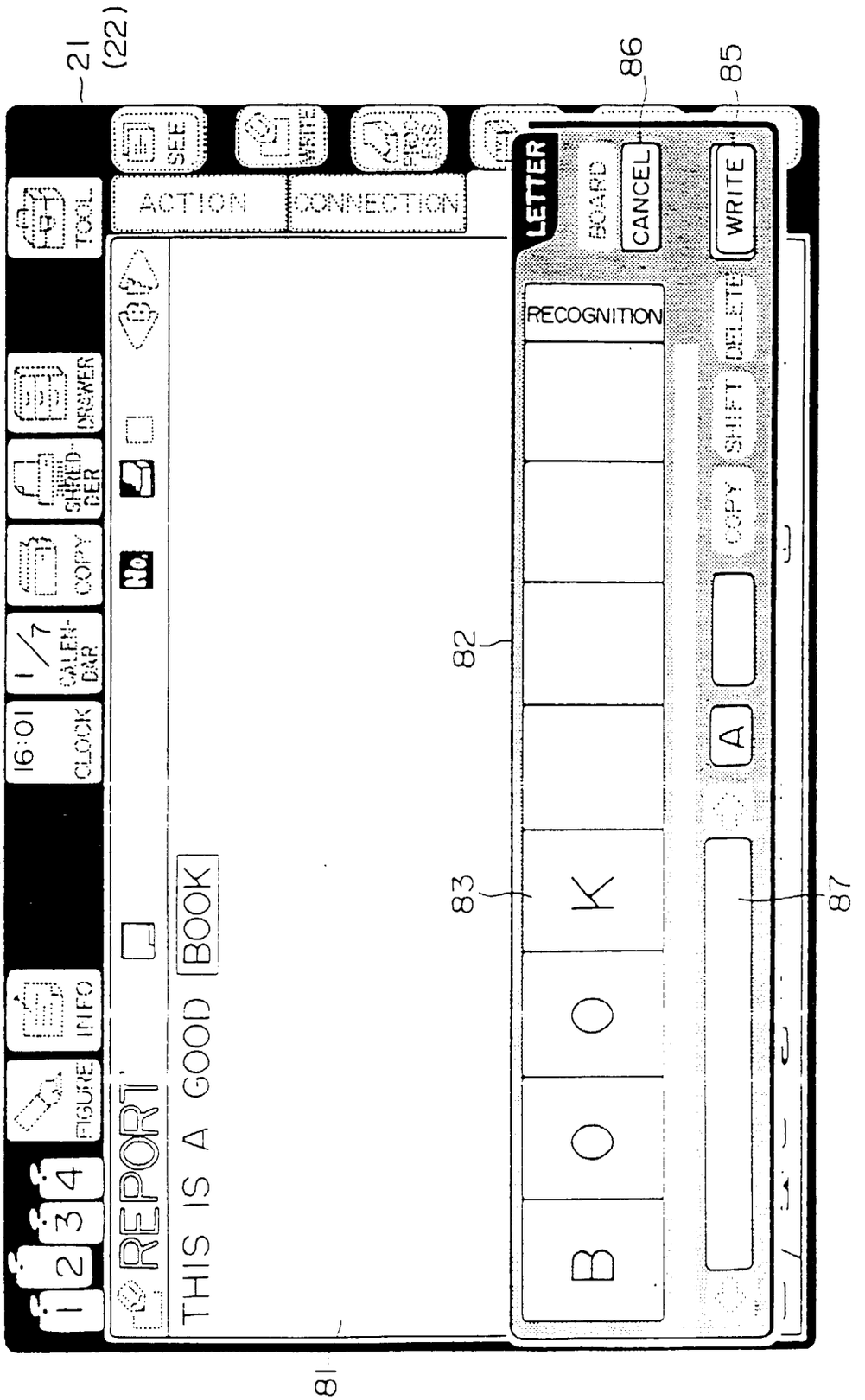
21
(22)
86
85
82
83
87
81
18
1
2
3
4
FIGURE
INFO
16:01
CLOCK
1/7
CALEN-DAR
COPY
SHRED-DER
DRAWER
TOOL
SEE
WRITE
ACTION
CONNECTION
REPORT
THIS IS A GOOD BOOK
LETTER
BOARD
CANCEL
WRITE
RECOGNITION
SHIFT
DELETE
COPY
A
B O O K

FIG. 11

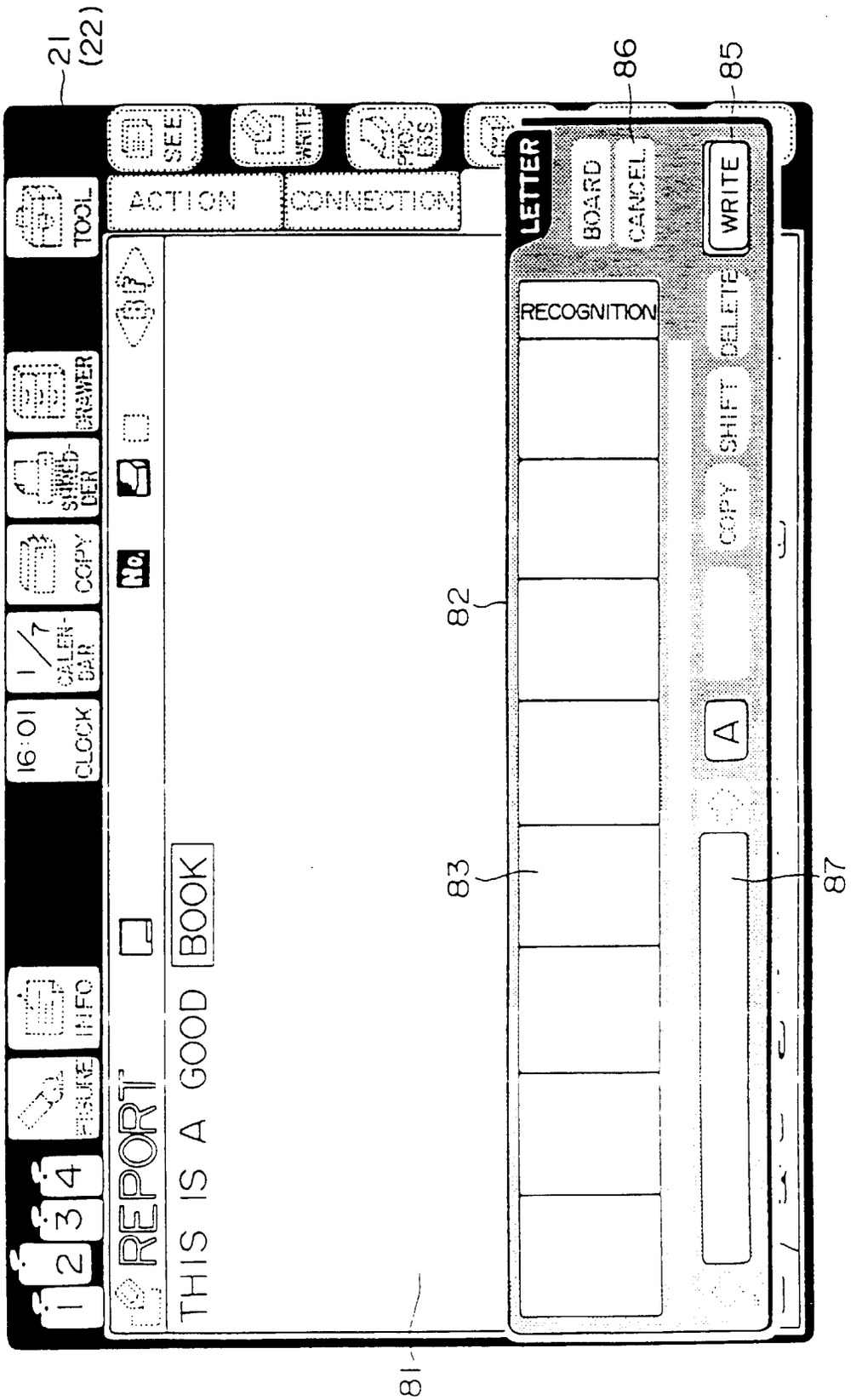
21
(22)
86
85
SEE
WRITE
PROC-ESS
ACTION
CONNECTION
TOOL
DRAWER
SHRED-DER
COPY
1/7
CALEN-DAR
16:01
CLOCK
INFO
FIGURE
1
2
3
4
REPORT
THIS IS A GOOD BOOK
LETTER
BOARD
CANCEL
WRITE
RECOGNITION
DELETE
SHIFT
COPY
A
82
83
87
81

FIG. 12

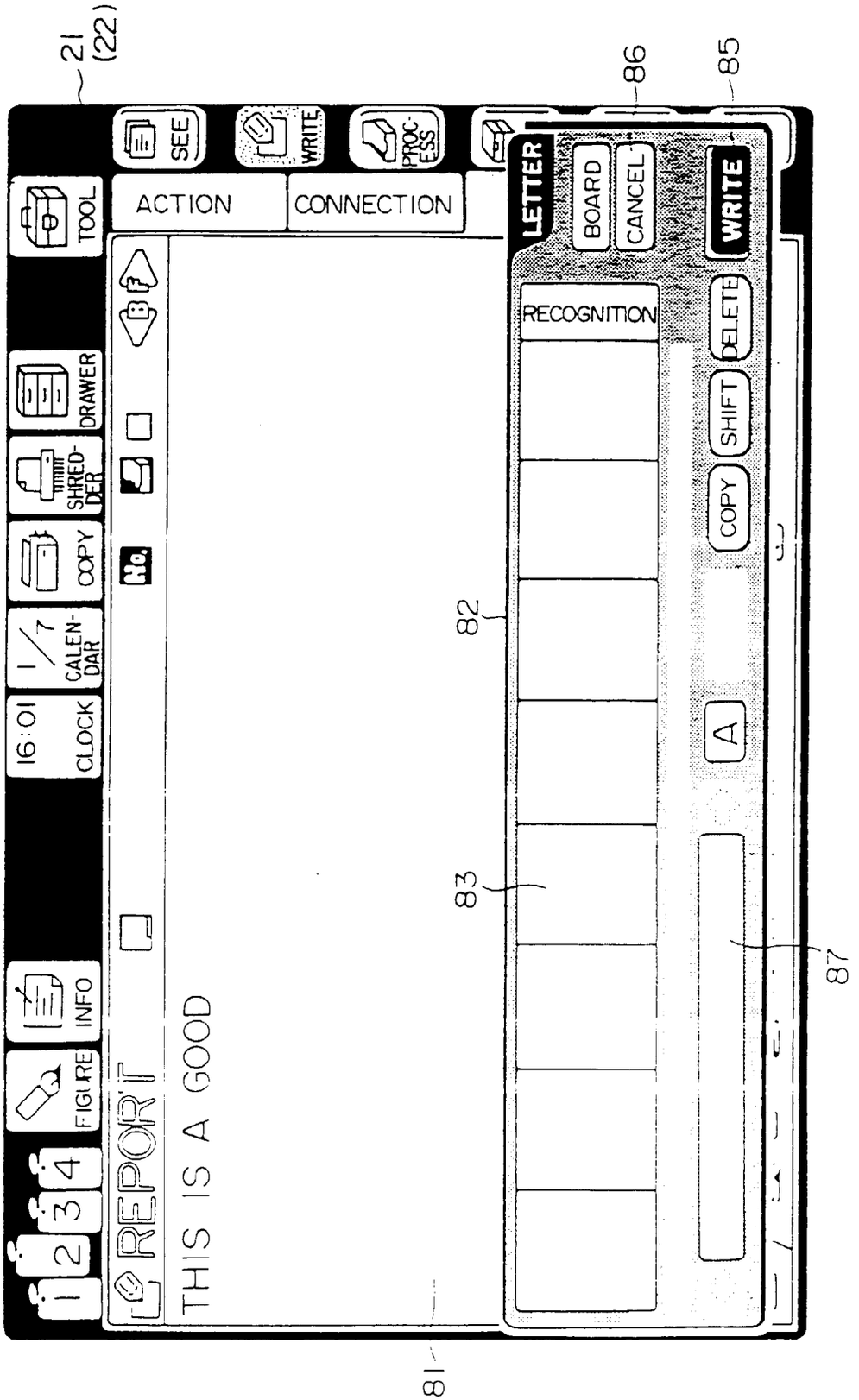
21
(22)
86
85
82
83
87
81
1
2
3
4
FIGURE
INFO
CLOCK
16:01
CALEN-DAR
1/7
COPY
SHRED-DER
DRAWER
TOOL
ACTION
CONNECTION
SEE
WRITE
PROC-ESS
REPORT
THIS IS A GOOD
No.
LETTER
BOARD
CANCEL
WRITE
RECOGNITION
DELETE
SHIFT
COPY
A

FIG. 13

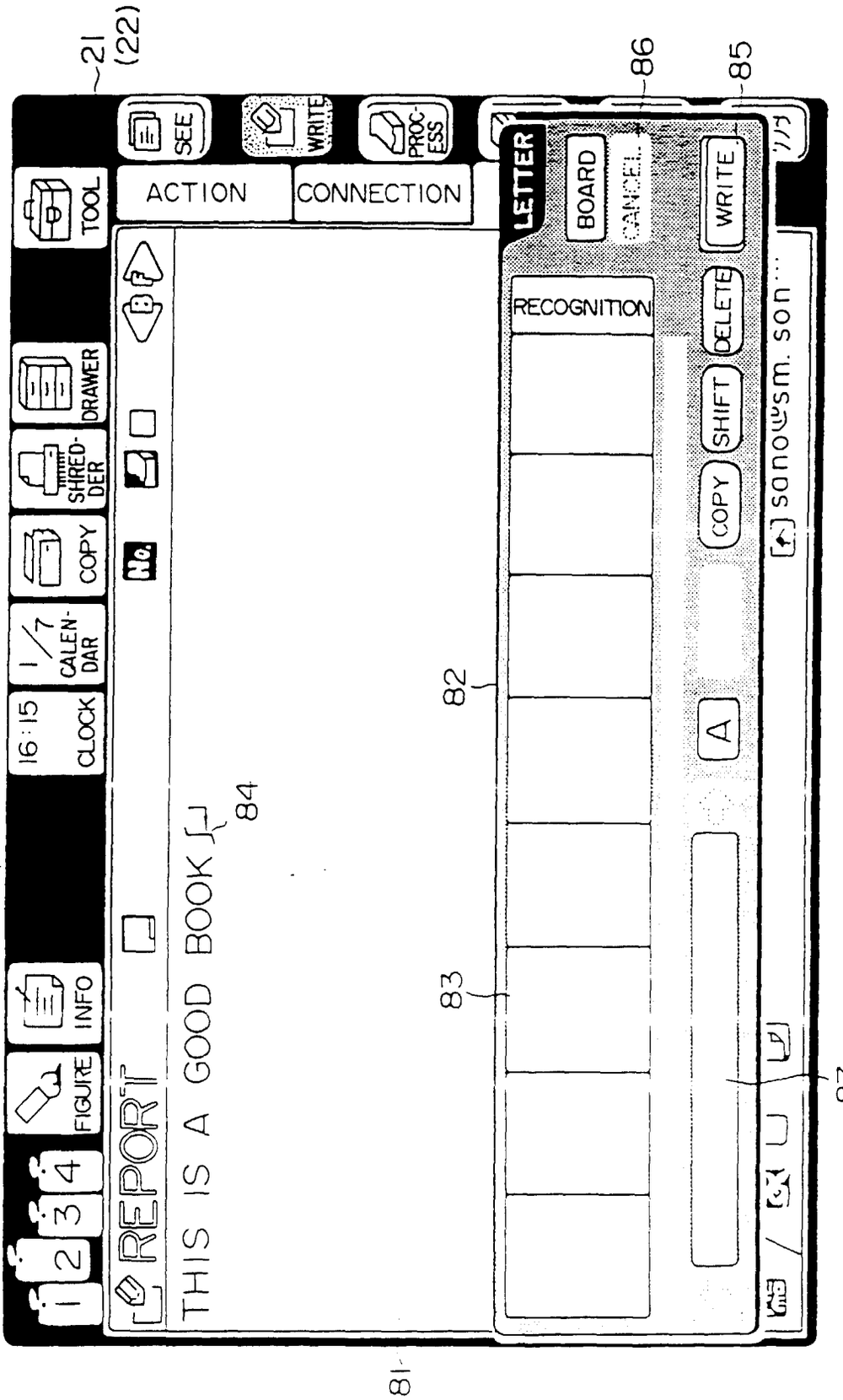
21
(22)
86
85
TOOL
SEE
WRITE
PROC-ESS
ACTION
CONNECTION
DRAWER
SHRED-DER
COPY
CALEN-DAR
CLOCK
FIGURE
INFO
LETTER
BOARD
CANCEL
WRITE
RECOGNITION
DELETE
SHIFT
COPY
A
REPORT
THIS IS A GOOD BOOK
84
82
83
87
81

FIG. 14

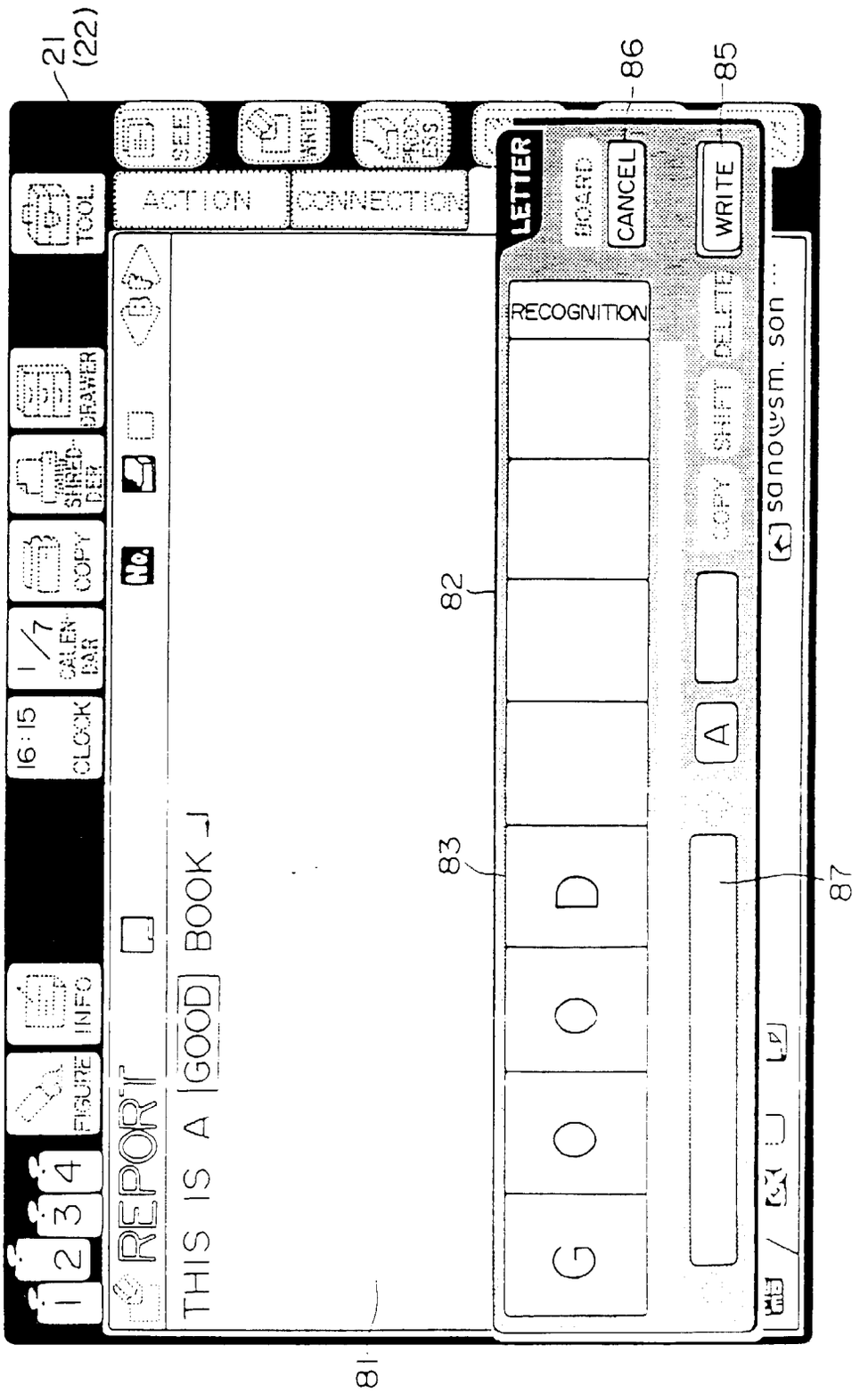
21
(22)
86
85
81
82
83
87
1
2
3
4
FIGURE
INFO
16:15
CLOCK
1/7
CALEN DAR
COPY
SHRED DER
DRAWER
TOOL
SEE
WRITE
ACTION
CONNECTION
LETTER
BOARD
CANCEL
WRITE
RECOGNITION
REPORT
THIS IS A GOOD BOOK
G O O D
A
COPY
SHIFT
DELETE
sanoysm. son

FIG. 15

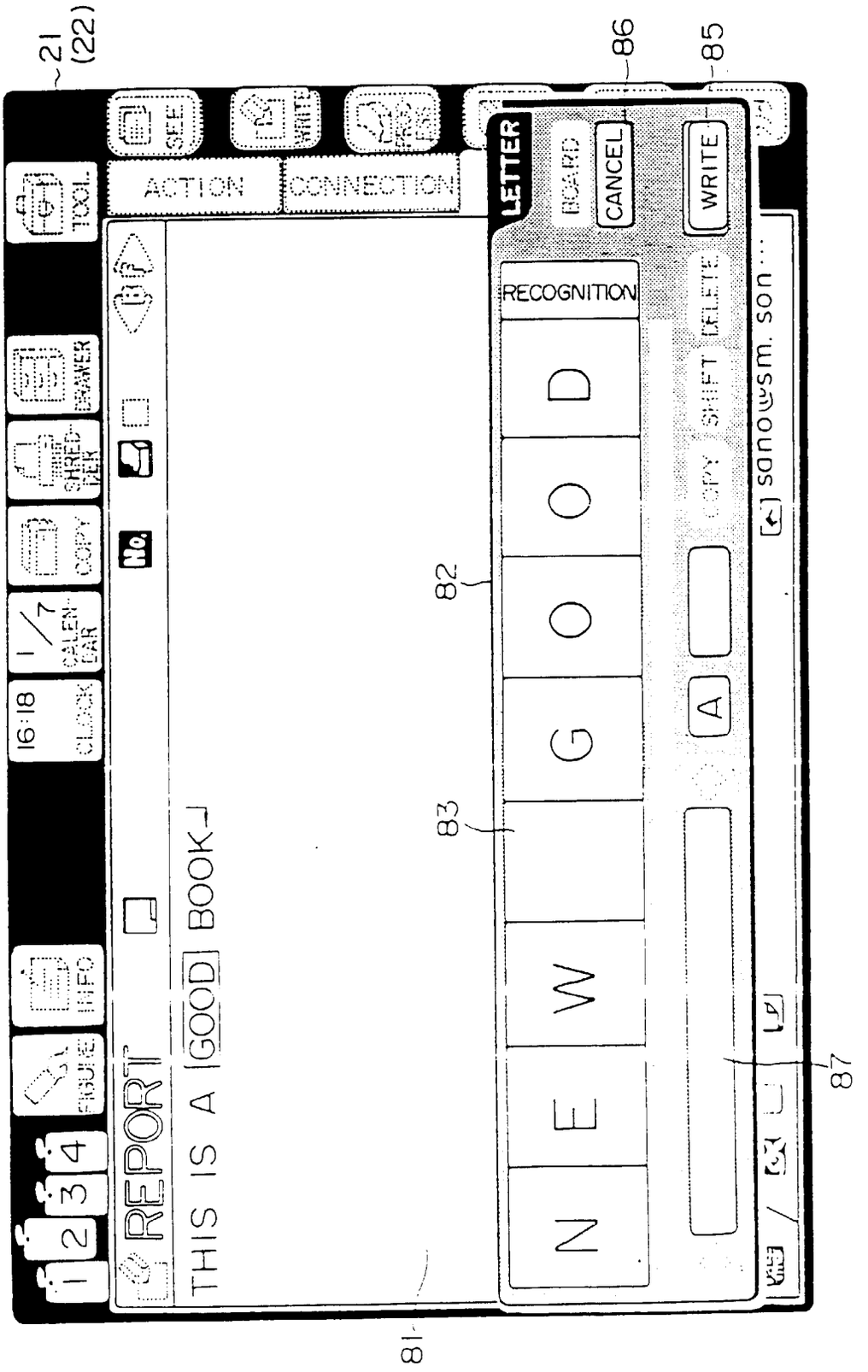
21
(22)
86
85
82
83
87
81
TOOL
DRAWER
SHREDDER
COPY
CALENDAR
16:18
CLOCK
INFO
FIGURE
1
2
3
4
SEE
WRITE
ACTION
CONNECTION
LETTER
BOARD
CANCEL
WRITE
RECOGNITION
DELETE
SHIFT
COPY
A
REPORT
THIS IS A GOOD BOOK
N
E
W
G
O
O
D
sano@sm.son

FIG. 16

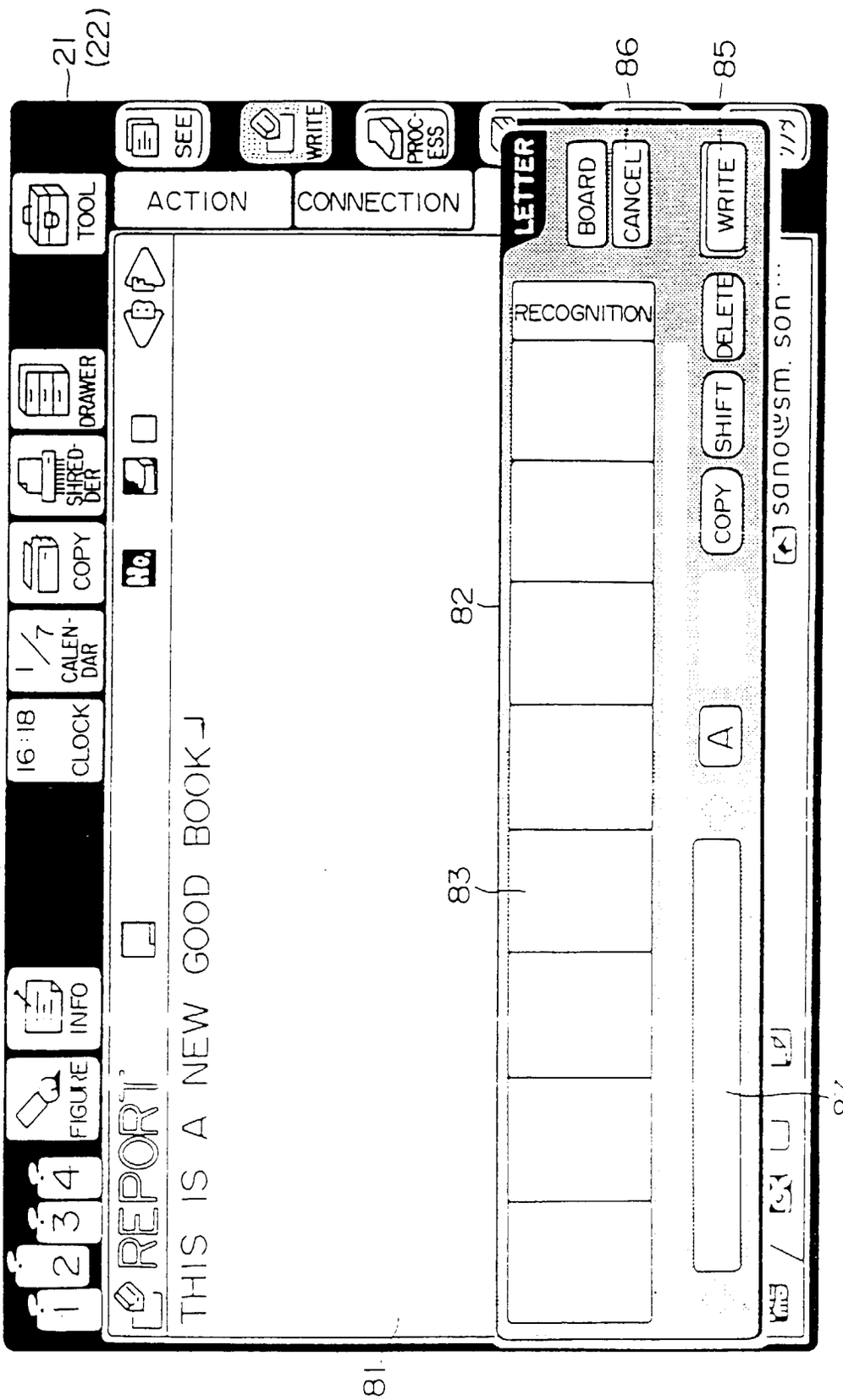
21
(22)
86
85
SEE
WRITE
PROC-ESS
TOOL
ACTION
CONNECTION
LETTER
BOARD
CANCEL
WRITE
DRAWER
SHRED-DER
COPY
1/7 CALEN-DAR
16:18 CLOCK
INFO
FIGURE
1 2 3 4
REPORT
THIS IS A NEW GOOD BOOK
RECOGNITION
DELETE
SHIFT
COPY
A
82
83
87
81

FIG. 17A

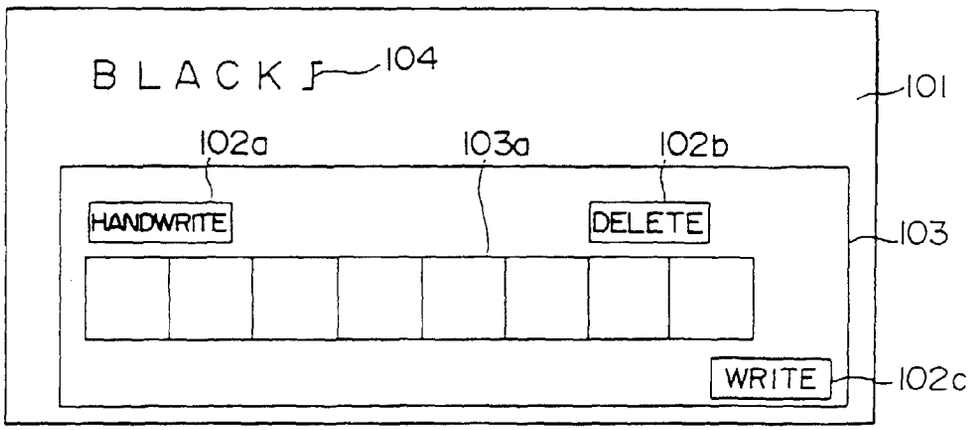

FIG. 17B

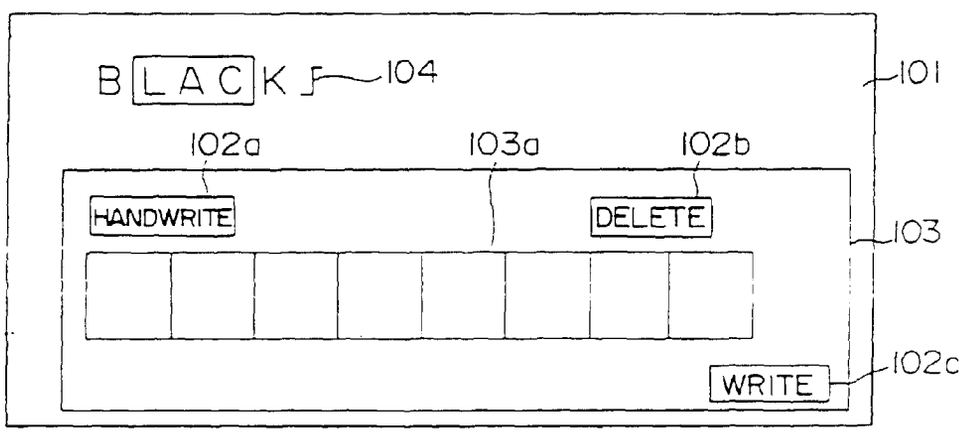

FIG. 17C

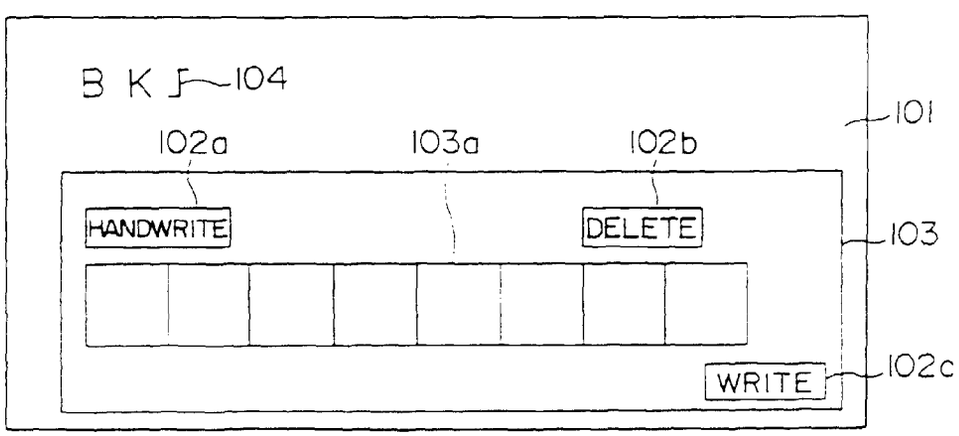

FIG. 18A

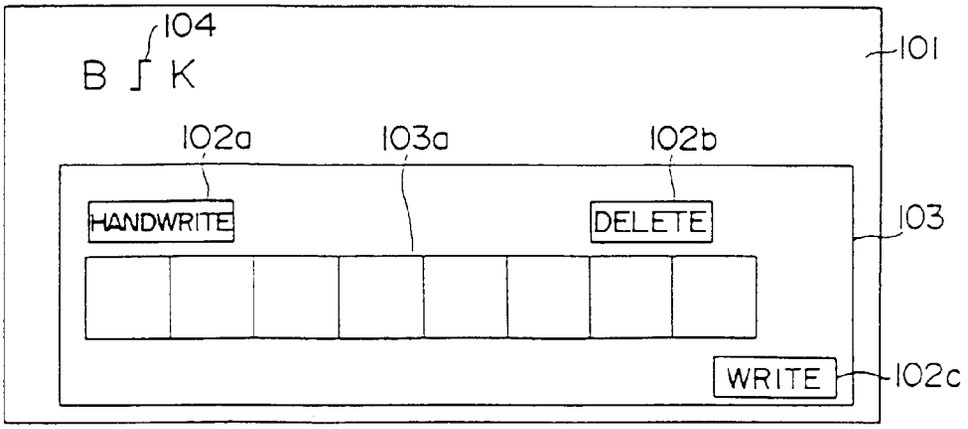

FIG. 18B

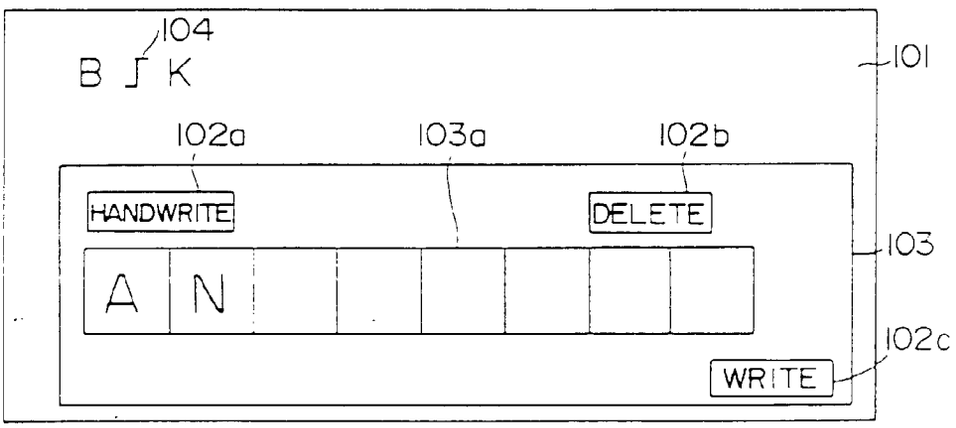

FIG. 18C

