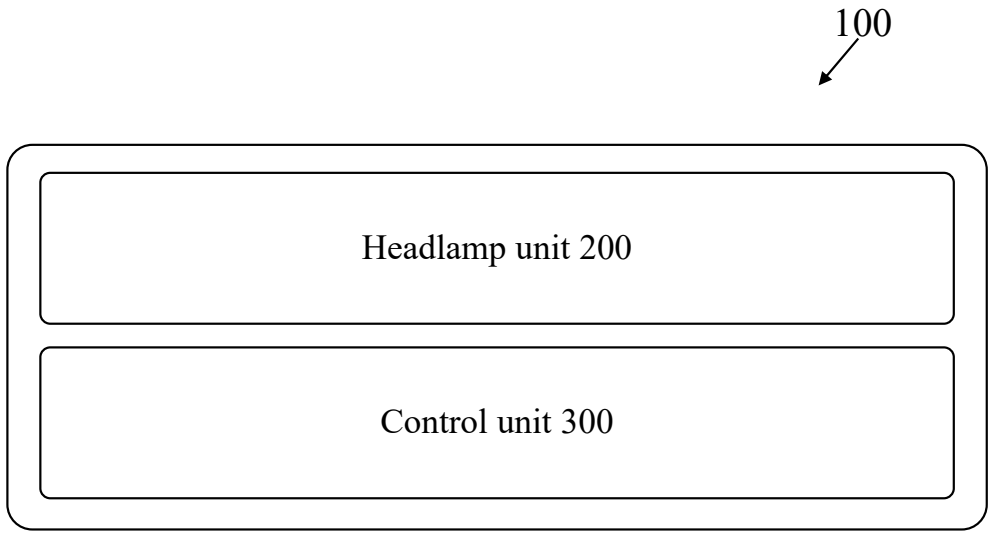

FIGURE 1

Manisha Singh
Agent for the Applicant [IN/PA-740]
LEXORBIS

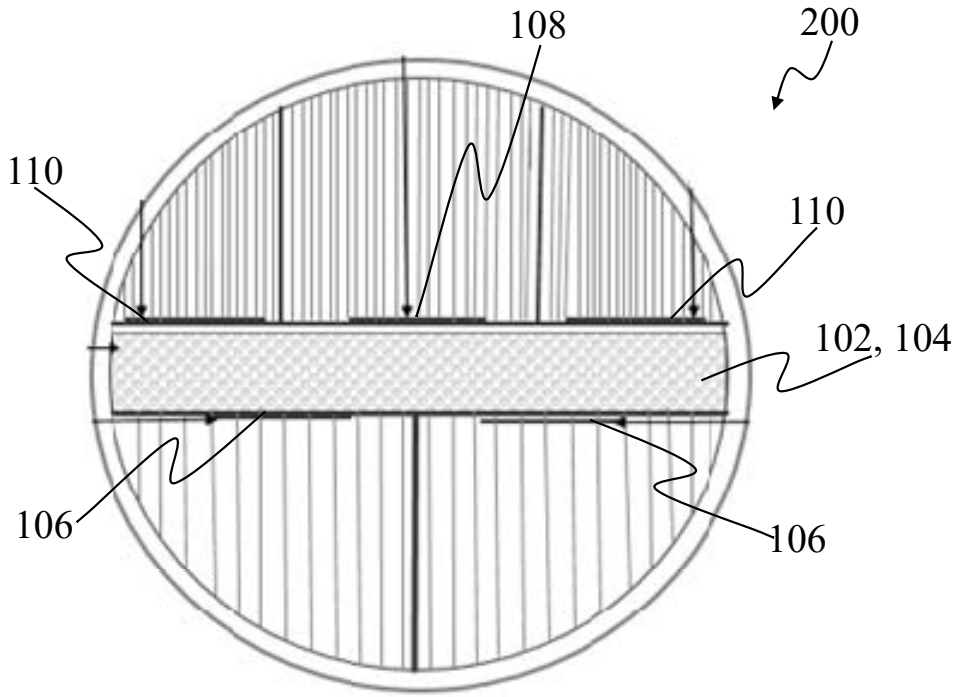

FIGURE 2

Manisha Singh
Agent for the Applicant [IN/PA-740]
LEXORBIS

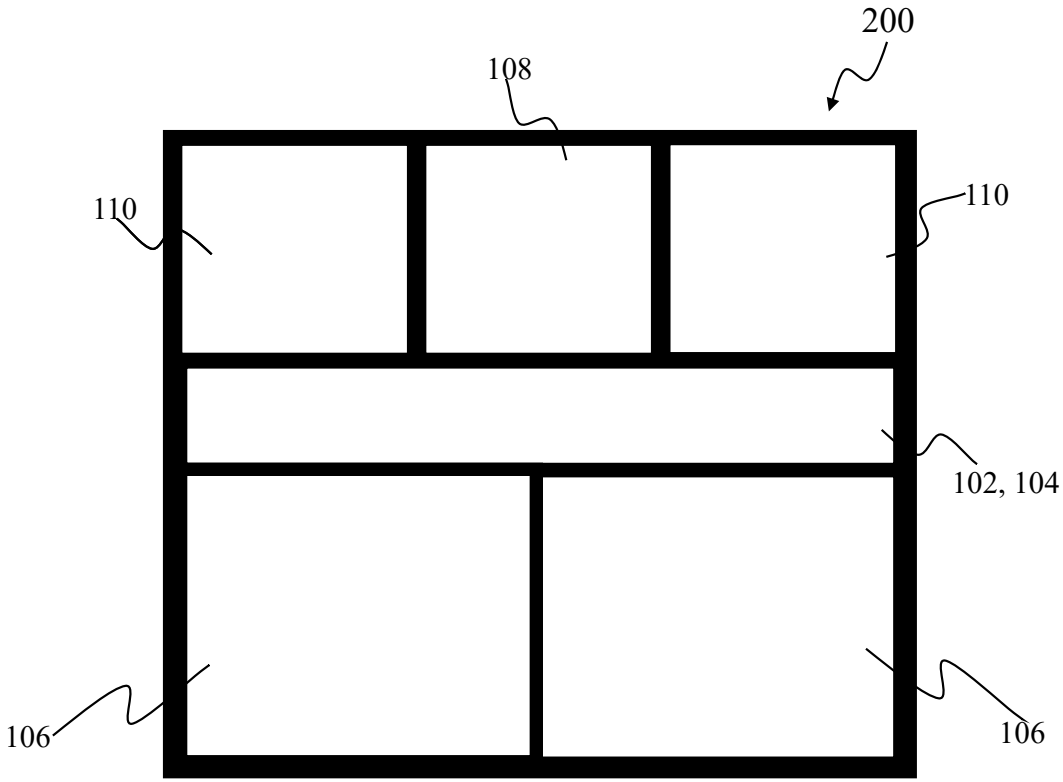

FIGURE 3

Manisha Singh
Agent for the Applicant [IN/PA-740]
LEXORBIS

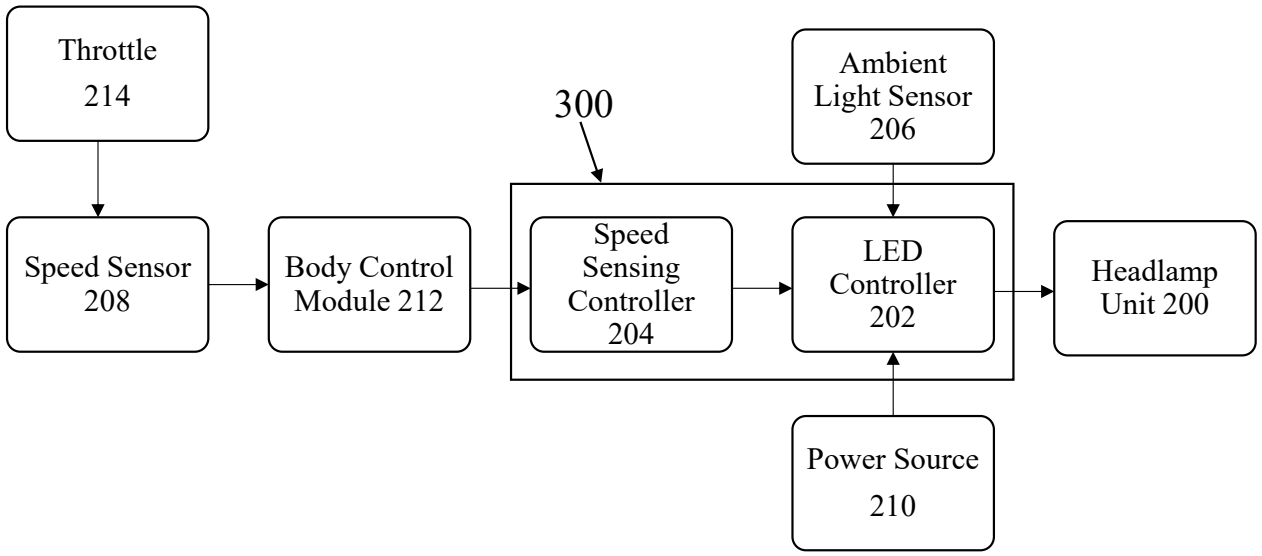

FIGURE 4

Manisha Singh
Agent for the Applicant [IN/PA-740]
LEXORBIS

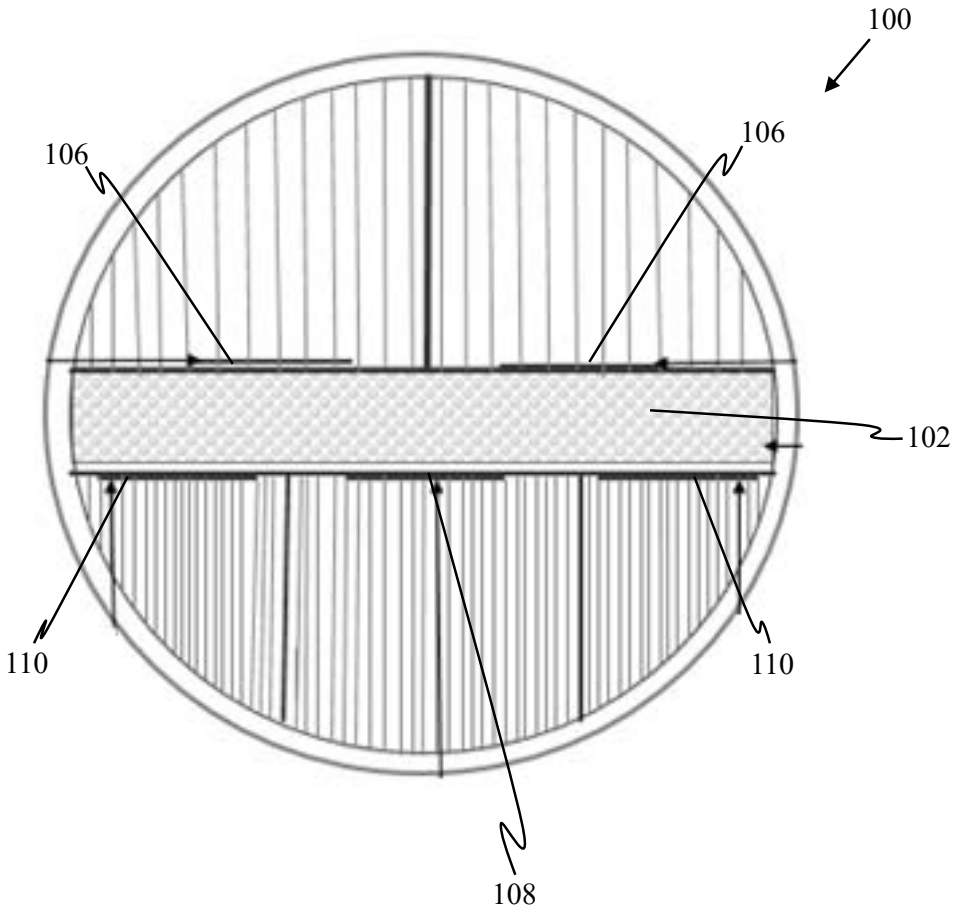

FIG. 1A

Manisha Singh
Agent for the Applicant [IN/PA-740]
LEXORBIS

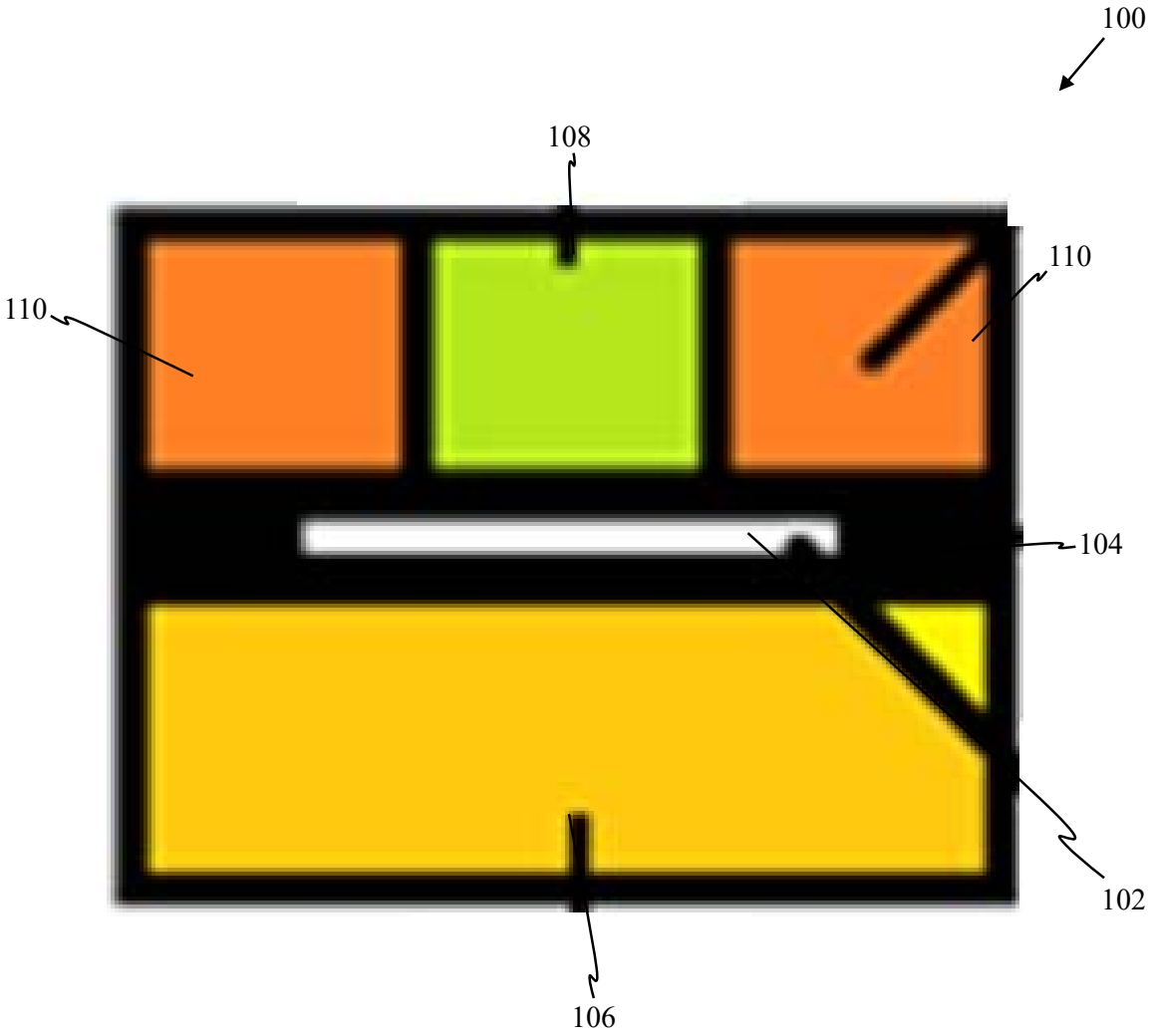

FIG. 1B

Manisha Singh
Agent for the Applicant [IN/PA-740]
LEXORBIS

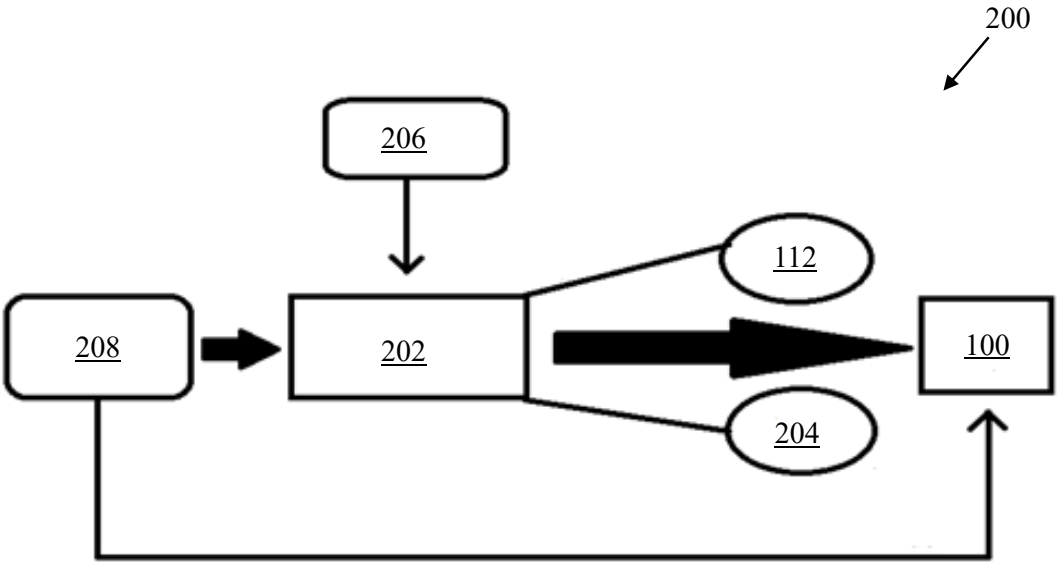

FIG. 2

Manisha Singh
Agent for the Applicant [IN/PA-740]
LEXORBIS

FORM 2
THE PATENTS ACT 1970
(39 of 1970)
&
The Patents [Amendment] Rules, 2006
COMPLETE SPECIFICATION

(See section 10 and rule 13)

1. TITLE OF THE INVENTION

AUTOMATED PROGRESSIVE HEADLAMP ASSEMBLY

2. APPLICANT:

NAME : UNO Minda Limited

NATIONALITY : IN

ADDRESS : Village Nawada, Fatehpur, P.O. Sikanderpur Badda, District-Gurgaon, Haryana-122004, India

3. PREAMBLE TO THE DESCRIPTION

COMPLETE

The following specification particularly describes the invention and the manner in which it is to be performed.

FIELD OF THE INVENTION

The present disclosure relates to a headlamp for a two-wheeler and more particularly relates to an automated progressive headlamp assembly to facilitate improved illumination in the front of a vehicle.

BACKGROUND

Typically, a headlamp is employed to illuminate a road ahead of a vehicle, such as a two-wheeler or a four-wheeler for the driver or the rider. Nowadays, vehicles are provided with a multifeatured light to enhance the illumination as well as increase the aesthetic appeal of the vehicle. The multifeatured lights include daytime running lights (DRL), front positioning lights (FPL), a turning indicator, etc.

The headlamps provide low-beam lights to illuminate a portion of the road in the vicinity of the vehicle and a high-beam light to illuminate a portion of the road beyond the region illuminated by the low-beam lights. The high beam light is not preferred in urban areas because the high beam light causes unnecessary glaring on the riders of the oncoming vehicles owing to their beam angle and throw. However, the low beam is inadequate on highways. In addition, the headlamps are generally operated manually to toggle between the high-beam light and the low-beam light. Further, since the toggle is performed manually, there are scenarios

where the rider mistakenly leaves the headlight to the high beam or the low beam which can cause glare in urban areas.

Accordingly, there exists a need to provide a headlamp assembly for a two-wheeler to overcome the limitations/drawbacks of conventional headlamps and facilitate improved illumination in the front portion of the road.

SUMMARY

This summary is provided to introduce a selection of concepts, in a simplified format, that are further described in the detailed description of the invention. This summary is neither intended to identify key or essential inventive concepts of the invention nor is it intended for determining the scope of the invention.

The present disclosure is related to a headlamp assembly for a two-wheeler that includes a headlamp unit configured to operate in a plurality of light modes wherein each of the light modes is indicative of a degree of illumination by the headlamp unit. The headlamp assembly also includes a speed sensor adapted to sense a speed of the two-wheeler and an ambient light sensor adapted to sense ambient light. Further, the headlight assembly includes a control unit operatively coupled with the headlamp unit, the speed sensor, and the ambient light sensor. The control unit is adapted to compare the sensed speed and the sensed light with at least one speed threshold value and a light threshold value respectively and actuate the headlamp unit to operate in a light mode of the plurality of light modes based on the comparison between the sensed speed with the at least one speed threshold values and the sensed ambient light with the light threshold value.

In an embodiment, a two-wheeler is disclosed that includes a chassis and a headlamp assembly installed on the chassis. The headlamp assembly includes a headlamp unit configured to operate in a plurality of light modes, wherein each of the light modes is indicative of a degree of illumination by the headlamp unit. The

two-wheeler also includes a speed sensor adapted to sense a speed of the two-wheeler and an ambient light sensor adapted to sense ambient light. The two-wheeler also includes a control unit operatively coupled with the headlamp unit, the speed sensor, and the ambient light sensor. The control unit is adapted to compare the sensed speed and the sensed light with at least one speed threshold value and a light threshold value respectively and actuate the headlamp unit to operate in a light mode of the plurality of light modes based on the comparison between the sensed speed with the at least one speed threshold values and the sensed light with the light threshold value.

The headlamp assembly facilitates illumination of the front portions of the two-wheeler all the time. In addition, the headlamp assembly does not create glare or any high beam during city riding conditions for approaching vehicles. However, if the operation of the two-wheeler is done at high speed, the booster lamps and the high beam lamps are turned on to facilitate the illumination of faraway portions from the two-wheeler in front of the vehicle gets illuminated. This makes the two-wheeler safe for the rider, pedestrian, or any other approaching vehicle from the front of the two-wheeler.

To further clarify the advantages and features of the present invention, a more particular description of the invention will be rendered by reference to specific embodiments thereof, which are illustrated in the appended drawings. It is appreciated that these drawings depict only typical embodiments of the invention and are therefore not to be considered limiting of its scope. The invention will be described and explained with additional specificity and detail in the accompanying drawings.

BRIEF DESCRIPTION OF THE DRAWINGS

These and other features, aspects, and advantages of the present invention will become better understood when the following detailed description is read with

reference to the accompanying drawings in which like characters represent like parts throughout the drawings, wherein:

Figure 1 illustrates a schematic diagram of an automated progressive headlamp assembly, according to an embodiment of the present disclosure;

Figure 2 illustrates a schematic diagram of a headlamp unit of the automated progressive headlamp assembly, according to an embodiment of the present disclosure;

Figure 3 illustrates a block diagram of the headlamp unit of the automated progressive headlamp assembly, according to an embodiment of the present disclosure; and

Figure 4 illustrates a schematic diagram of a control unit of the automated progressive headlamp assembly, according to an embodiment of the present disclosure.

Further, skilled artisans will appreciate that elements in the drawings are illustrated for simplicity and may not have necessarily been drawn to scale. Furthermore, in terms of the construction of the device, one or more components of the device may have been represented in the drawings by conventional symbols, and the drawings may show only those specific details that are pertinent to understanding the embodiments of the present invention so as not to obscure the drawings with details that will be readily apparent to those of ordinary skill in the art having the benefit of the description herein.

DETAILED DESCRIPTION OF FIGURES

To promote an understanding of the principles of the invention, reference will now be made to the embodiment illustrated in the drawings and specific language will be used to describe the same. It will nevertheless be understood that no limitation of the scope of the invention is thereby intended, such alterations and further modifications in the illustrated system, and such further applications of the

principles of the invention as illustrated therein being contemplated as would normally occur to one skilled in the art to which the invention relates. Unless otherwise defined, all technical and scientific terms used herein have the same meaning as commonly understood by one of ordinary skilled in the art to which this invention belongs. The system, methods, and examples provided herein are illustrative only and not intended to be limiting.

For example, the term "some" as used herein may be understood as "none" or "one" or "more than one" or "all." Therefore, the terms "none," "one," "more than one," "more than one, but not all" or "all" would fall under the definition of "some." It should be appreciated by a person skilled in the art that the terminology and structure employed herein is for describing, teaching, and illuminating some embodiments and their specific features and elements and therefore, should not be construed to limit, restrict or reduce the spirit and scope of the present disclosure in any way.

For example, any terms used herein such as, "includes," "comprises," "has," "consists," and similar grammatical variants do not specify an exact limitation or restriction, and certainly do not exclude the possible addition of one or more features or elements, unless otherwise stated. Further, such terms must not be taken to exclude the possible removal of one or more of the listed features and elements, unless otherwise stated, for example, by using the limiting language including, but not limited to, "must comprise" or "needs to include."

Whether or not a certain feature or element was limited to being used only once, it may still be referred to as "one or more features" or "one or more elements" or "at least one feature" or "at least one element." Furthermore, the use of the terms "one or more" or "at least one" feature or element do not preclude there being none of that feature or element, unless otherwise specified by limiting language including, but not limited to, "there needs to be one or more…" or "one or more elements is required."

Unless otherwise defined, all terms, and especially any technical and/or scientific terms, used herein may be taken to have the same meaning as commonly understood by a person ordinarily skilled in the art.

Reference is made herein to some "embodiments." It should be understood that an embodiment is an example of a possible implementation of any features and/or elements of the present disclosure. Some embodiments have been described for the purpose of explaining one or more of the potential ways in which the specific features and/or elements of the proposed disclosure fulfil the requirements of uniqueness, utility, and non-obviousness.

Use of the phrases and/or terms including, but not limited to, "a first embodiment," "a further embodiment," "an alternate embodiment," "one embodiment," "an embodiment," "multiple embodiments," "some embodiments," "other embodiments," "further embodiment", "furthermore embodiment", "additional embodiment" or other variants thereof do not necessarily refer to the same embodiments. Unless otherwise specified, one or more particular features and/or elements described in connection with one or more embodiments may be found in one embodiment, or may be found in more than one embodiment, or may be found in all embodiments, or may be found in no embodiments. Although one or more features and/or elements may be described herein in the context of only a single embodiment, or in the context of more than one embodiment, or in the context of all embodiments, the features and/or elements may instead be provided separately or in any appropriate combination or not at all. Conversely, any features and/or elements described in the context of separate embodiments may alternatively be realized as existing together in the context of a single embodiment.

Any particular and all details set forth herein are used in the context of some embodiments and therefore should not necessarily be taken as limiting factors to the proposed disclosure.

Embodiments of the present disclosure will be described below in detail with reference to the accompanying figures.

Figure 1 illustrates a schematic diagram of a headlamp assembly 100, according to an embodiment of the present disclosure. The headlamp assembly 100 may be a part of a vehicle and may be installed on the chassis of the vehicle. In one example, the vehicle can be a two-wheeler and the headlamp assembly 100 is arranged at the front of the chassis of the two-wheeler. Further, the head assembly 100 is adapted to illuminate and enhance the visibility of the road and the oncoming traffic. The headlamp assembly 100 is designed in such a way that the headlamp assembly 100 can change the intensity of the illumination based on the speed at which the two-wheeler is traveling and the light conditions around the two-wheeler. the head assembly 100 may include a headlamp unit 200 and a control unit 300. The headlamp unit 200 may have a plurality of lights that can operate in a plurality of light modes whereas the control unit 300 is adapted to actuate the headlamp unit 200. The headlamp assembly 100 may also include other components, such as an ambient light sensor, and speed sensor, details of which will be explained later. In one example, the ambient light sensor 206 is adapted to sense ambient light around the two-wheeler whereas the speed sensor 208 is adapted to sense the speed of the two-wheeler. Further, the ambient light sensor is adapted to detect the intensity of the light around the two-wheeler and further facilitates the detection of the ambient light, the streetlights, any other oncoming vehicle lights, and other types of lighting.

Figure 2 illustrates a schematic diagram of a headlamp unit 200, and **Figure 3** illustrates a block diagram of the headlamp unit 200, according to an embodiment of the present disclosure. As mentioned before, the headlamp unit 200 is configured to operate in a plurality of light modes to facilitate the adjustment of a beam of light. The headlamp unit 200 may include a daytime running lamp (DRL) 102, a front positioning light (FPL) 104, a low beam lamp 106, a high beam lamp 108, and a booster lamp 110.

The headlamp unit 200 may include the daytime running lamp 102, which is a low-powered light source to facilitate the identification of others about the presence of the two-wheeler. The DRL 102 illuminates with the initiation of the engine, remains switched on as long as the two-wheeler is running, and switches off with the turning-off of the two-wheeler. The DRL 102, is negligible in bright daylight due to it being a low-powered light source, but in case of bad light conditions during the daytime, it works efficiently.

The headlamp unit 200 also accommodates the front positioning light 104 having low light intensity as compared to the light intensity of the DRL 102. In an example, the light intensity of the front positioning light 104 and the DRL 102 overlaps the light illuminations from the DRL 102. As an example, turning a key in a switched-on state turns on the front positioning light 104, and providing ignition from the key turns on the DRL 102 along with the front positioning light 104. In an example, the luminous intensity of the front positioning light 104 is four units and the luminous intensity of the DRL 102 is 40 units. Further, the FPL 104 projects light along a reference line to provide visibility while turning from a distance. In one example, the FPL 104 may be built into the DRL 102.

Further, the headlamp unit 200 includes low beam lamp 106, high beam lamp 108, and one or more booster lamp 110. The low beam lamp 106 is located at the base of the headlamp unit 200 and operates at a minimum intensity. Furthermore, the low beam lamp 106 is illuminated to project light on front tires and roads proximate to front tires. Whereas the high beam lamp 108 and the booster lamp 110 are configured to operate at maximum intensity with respect to the speed of the two-wheeler. The booster lamp 110 includes two sections as the booster lamp 110 is paired with the high beam lamp 108 between them.

In one example, the headlamp unit 200 may be operated in a plurality of light modes such that, each of the light modes is indicative of a degree of illumination

by the headlamp unit 200. The plurality of light modes includes a first light mode, a second light mode, a third light mode, and a fourth light mode to be switched based on a sensed speed of the two-wheeler an ambient light conditions around the two-wheeler. Moreover, the switching between the plurality of light modes by the control unit 300 has the LED controller 202. The plurality of light modes reduces the unnecessary glare on the oncoming two-wheeler and the roads. The plurality of light modes is configured to switch between each other according to the light conditions and thereby increases and decreases the intensity of light accordingly.

According to the present disclosure, the light modes are actuated by the control unit 300, details of which will be explained with respect to **Figure 4**. Specifically, **Figure 4** illustrates a schematic diagram of the control unit 300, according to an embodiment of the present disclosure. The control unit 300 is operatively coupled with the headlamp unit 200. In one example, the control unit 300 can be part of the headlamp assembly 100 shown in Figure 1. Alternatively, the control unit 200 can be external to the headlamp assembly 100 and can be a part of an electronic control unit (ECU) of the two-wheeler.

The control unit 300 may include a LED controller 202 and a speed sensing controller 204. Further, the control unit 300 may interact with the ambient light sensor 206 and the speed sensor 208, a power source 210, a body control module 212, and a throttle 214 of the two-wheeler. Further, the throttle 214 may be operated by a rider to change the speed of the two-wheeler. In one example, the control unit 300 can supply power to the headlamp unit 200 via a power source 210 to operate the headlamp unit 200 in different modes.

In one example, the smart LED controller 202 is designed to allow the headlamp unit 200 to be switched between multiple light modes in response to the two-wheeler's speed and the ambient light conditions around the two-wheeler. The smart LED controller 202 is also configured to operate in a plurality of light modes

including the first light mode, the second light mode, the third light mode, and the fourth light mode.

Further, the headlamp unit 200 has the smart LED controller 202 to control the switching of the lamps, and the switching between the plurality of light modes is performed in response to lighting conditions. The smart LED controller 202 is connected to the ambient light sensor 206 so that it can operate in any of the light modes.

The speed sensor 208 is configured to sense the two-wheeler speed in real time and send that information to the smart LED controller 202. Further, the speed sensor 208 may be in communication with the throttle 214 to sense the speed. In one example, the speed sensor 208 may send the signal to the body control module 212 which process the sensed speed in a form that can be interpreted by the speed sensing controller 204.

Although not shown, the two-wheeler may include a toggle switch facilitating manual or automatic lamp switching. There may be a press-and-release button on the toggle switch (not shown) that, when pressed, changes the state from automatic to manual and, when released, shifts back to the automatic mode of light adjustment. Additionally, the user may have access to a plurality of knobs on a toggle switch to choose from among the plurality of light modes. In such a case, the rider would be able to manually switch between the various light modes by overriding the control unit 300.

Based on the signals from the speed sensor 208 and the ambient light sensor 206, the LED controller 202 may control the switching between the various light modes when it is in the automatic state. The ambient light sensor 206 is operatively coupled to the control unit 300 and adapted to sense an ambient light in the vicinity of the two-wheeler. Further, the control unit 300 is adapted to compare a sensed ambient light with a light threshold value and actuate the headlamp unit 200 to

operate in a plurality of light modes. The actuation and selection are done based on the comparison between the sensed speed with the speed threshold values and the sensed light with the light threshold value.

In addition, the LED controller 202 automatically determines whether the rider requires illumination and selects the appropriate light modes. For example, the LED controller 202 may select modes during the day when there is insufficient illumination. For instance, if the two-wheeler is crossing a tunnel at night and the tunnel light is bright enough to illuminate the road and the other vehicles approaching, then the LED controller 202 will only operate in the first mode. Another illustration of this would be that the LED controller 202 would switch to either the booster mode, the second mode, or the third mode, depending on if there are no lights in the tunnel.

The application and working of the headlamp unit 200 are now explained. Initially, the rider may insert the key and turn on the ignition of the two-wheeler. in that scenario, the vehicle enters a default mode in which only the FPL 104 is switched on by the control unit 300. After that, the rider may turn the key further to start the two-wheeler. When the two-wheeler is started, the throttle 214 sends a signal to the LED controller 202 via the body control module 212 to turn on the DRL 102, which is the first mode, during the operation. The ambient light sensor 206 also sends information to the smart LED controller 202 about the conditions of the ambient light around the two-wheeler. As the two-wheeler moves, the switching is based on the ambient light and the two-wheeler's speed. Further, when the LED controller 202 is set to operate automatically, it uses information from the ambient light sensor 206 and the two-wheeler speed from the speed sensor 208. In this manner, the headlamp unit 200 switches between the plurality of light modes to facilitate an improved view in front of the two-wheeler and thereby preventing any glare in the coming vehicles or any vehicle traveling in front of the vehicle. The different light modes are explained with respect to table 1 below.

Condition	FPL (104)	DRL (102)	Low Beam (106)	High Beam (108)	Booster High Beam (110)
Default mode	On	Off	Off	Off	Off
First mode	Off	On	Off	Off	Off
Second mode	Off	Off	On	Off	Off
Third mode	Off	Off	On	On	Off
Fourth mode	Off	Off	On	On	On

Table 1

In the first light mode, when the two-wheeler starts moving, the control unit 300 turns on the DRL 102 to illuminate the light. The first light mode is also known as the DRL mode and operates at the minimum intensity of light. In this mode, the ambient light sensor 206 and the speed sensor 208 are activated. For so doing, the control unit 300 compares the sensed speed with a first speed threshold value and actuates the light unit to operate in a first light mode based on the comparison between the sensed speed with the first speed threshold value. Further, the headlamp unit 200 is operated in the first light mode if the sensed speed is less than or equal to the first speed threshold value. In an example, the first speed threshold value of the speed may be zero kilometers per hour to thirty kilometers per hour.

In the second light mode, the control unit 300 compares the sensed speed with a second speed threshold value and the first speed threshold value, and the sensed ambient light with the light threshold value. Further, the control unit 300 actuates the headlamp unit 200 to operate in a second light mode of the plurality of light modes based on the comparison between the sensed speed with the second and first speed threshold values and the sensed light with the light threshold value. As an example, the second light mode is actuated if the sensed speed is greater than the first speed threshold value and less than or equal to the second speed threshold value and if the sensed light is greater than the light threshold value. For instance, the

second speed threshold value may be thirty kilometres per hour to sixty kilometres per hour.

Similarly, in the third light mode, the control unit 300 compares the sensed speed with a third speed threshold value and the second speed threshold value, and the sensed light with the light threshold value. Further, the control unit 300 actuates the headlamp unit (200) to operate in a third light mode of the plurality of light modes based on the comparison between the sensed speed with the third and second speed threshold values and the sensed light with the light threshold value. In one example, the third light mode is selected if the sensed speed is greater than the second speed threshold value and less than or equal to the third speed threshold value and if the sensed light is greater than the light threshold value. The third speed threshold value may be sixty kilometres per hour or above.

Finally, in the fourth light mode, the control unit 300 actuates the headlamp unit (200) to operate in a fourth light mode of the plurality of light modes based on the comparison between the sensed speed with the third speed threshold value and the sensed light with the light threshold value. In an example, the fourth light mode is selected if the sensed speed is greater than the third speed threshold value and if the sensed light is greater than the light threshold value. The third speed threshold value of the speed may be greater than sixty kilometers per hour.

Accordingly, the daytime running light 102 may get actuated in the first light mode while the front positioning light 104 is adapted to be actuated only in the default mode. Further, at least one low beam lamp 106 is adapted to be actuated in the second, third, and the fourth light mode. Further, the high beam lamp 108 is actuated in the third and the fourth light modes whereas the booster lamps 110 is adapted to be actuated in the fourth light mode.

In this manner, the headlamp unit 200 facilitates illumination of the front portions of the two-wheeler all the time. In addition, the headlamp assembly does

not create glare or any high beam during city riding conditions for approaching vehicles. However, if the operation of the two-wheeler is done at high speed, the booster lamps 110 and the high beam lamps 108 are turned on to facilitate the illumination of faraway portions from the two-wheeler in front of the vehicle gets illuminated. This makes the two-wheeler safe for the rider, pedestrian, or any other approaching vehicle from the front of the two-wheeler.

While specific language has been used to describe the present disclosure, any limitations arising on account thereto, are not intended. As would be apparent to a person in the art, various working modifications may be made to the method in order to implement the inventive concept as taught herein. The drawings and the foregoing description give examples of embodiments. Those skilled in the art will appreciate that one or more of the described elements may well be combined into a single functional element. Alternatively, certain elements may be split into multiple functional elements. Elements from one embodiment may be added to another embodiment.

We Claim:

1. A headlamp assembly (100) for a two-wheeler, comprising:

a headlamp unit (200) configured to operate in a plurality of light modes, wherein each of the light modes is indicative of a degree of illumination by the headlamp unit (200);

and

a control unit (300) operatively coupled with the headlamp unit (200), a speed sensor (208) adapted to sense the speed of the two-wheeler, and an ambient light sensor (206) adapted to sense ambient light, wherein the control unit (300) is adapted to:

compare a sensed speed and a sensed light with at least one speed threshold value and a light threshold value respectively; and

actuate the headlamp unit (200) to operate in a light mode of the plurality of light modes based on the comparison between the sensed speed with the at least one speed threshold values and a sensed ambient light with the light threshold value.

2. The headlamp assembly (100) as claimed in claim 1, wherein the at least one speed threshold value includes a first speed threshold value and the control unit (300) is adapted to:

compare the sensed speed with the first speed threshold value; and

actuate the headlamp unit (200) to operate in a first light mode of the plurality of light modes based on the comparison between the sensed speed with the first threshold value.

3. The headlamp assembly (100) as claimed in claim 2, wherein the at least one speed threshold value includes a second speed threshold value and the control unit (300) is adapted to:

compare the sensed speed with the second speed threshold value and the first speed threshold value and the sensed ambient light with the light threshold value; and

actuate the headlamp unit (200) to operate in a second light mode of the plurality of light modes based on the comparison between the sensed speed with the second speed threshold value and first speed threshold value and the sensed light with the light threshold value.

4. The headlamp assembly (100) as claimed in claim 3, wherein the at least one speed threshold value includes a third speed threshold value and the control unit (300) is adapted to:

compare the sensed speed with the third speed threshold value and the second speed threshold value and the sensed light with the light threshold value; and

actuate the headlamp unit (200) to operate in a third light mode of the plurality of light modes based on the comparison between the sensed speed with the third speed threshold value and second speed threshold value and the sensed light with the light threshold value.

5. The headlamp assembly (100) as claimed in claim 4, wherein the control unit (300) is adapted to:

actuate the headlamp unit (200) to operate in a fourth light mode of the plurality of light modes based on the comparison between the sensed speed with the third speed threshold value and the sensed light with the light threshold value.

6. The headlamp assembly (100) as claimed in claims 5, wherein the headlamp unit (200) is operated in:

the first light mode if the sensed speed is less than or equal to the first speed threshold value;

the second light mode if the sensed speed is greater than the first speed threshold value and less than or equal to the second speed threshold value and if the sensed light is greater than the light threshold value;

the third light mode if the sensed speed is greater than the second speed threshold value and less than the third speed threshold value and if the sensed light is greater than or equal to the light threshold value; and

the fourth light mode if the sensed speed is greater than the third speed threshold value and if the sensed light is greater than the light threshold value.

7. The headlamp assembly (100) as claimed in claim 1, wherein the headlamp unit (200) comprises:

a daytime running light (102) to be actuated in a first light mode of the plurality of light modes;

a front positioning light (104);

at least one low beam lamp (106) adapted to be actuated in a second light mode, a third light mode, and a fourth light mode of the plurality of light modes;

a high beam lamp (108) adapted to be actuated in the third light mode and the fourth light mode of the plurality of light modes; and

at least one booster lamps (110) adapted to be actuated in the fourth light mode of the plurality of light modes.

8. The headlamp assembly (100) as claimed in claim 1, wherein the control unit (300) comprises:

a speed sensing controller (204) adapted to compare the sensed speed and the at least one speed threshold value;

a LED controller (202) operably coupled to the speed sensing controller (204) and adapted to:

compare the sensed light with the light threshold value; and

actuate the headlamp unit (200) to operate in a light mode of the plurality of light modes based on the comparison between the sensed speed with the at least one speed threshold value and the sensed light with the light threshold value.

9. A headlamp assembly (100) for a two-wheeler, comprising:

a headlamp unit (200) configured to operate in a plurality of light modes, wherein each of the light modes is indicative of a degree of illumination by the headlamp unit (200); wherein the headlamp unit (200) comprises:

a daytime running light (102) to be actuated in a first light mode of the plurality of light modes;

a front positioning light (104);

at least one low beam lamp (106) adapted to be actuated in a second light mode, a third light mode, and a fourth light mode of the plurality of light modes;

a high beam lamp (108) adapted to be actuated in the third light mode and the fourth light mode of the plurality of light modes; and

at least one booster lamp (110) adapted to be actuated in the fourth light mode,

wherein a light mode of the plurality of light modes is selected based on the comparison between a sensed speed with at least one speed threshold value and a sensed ambient light with a light threshold value.

10. A two-wheeler comprising:

a chassis;

a headlamp assembly (100) installed on the chassis, the headlamp assembly (100) comprising a headlamp unit (200) configured to operate in a plurality of light modes, wherein each of the light modes is indicative of a degree of illumination by the headlamp unit (200);

a speed sensor (208) adapted to sense the speed of the two-wheeler;

an ambient light sensor (206) adapted to sense ambient light; and

a control unit (300) operatively coupled with the headlamp unit (200), the speed sensor (208), and the ambient light sensor (206), wherein the control unit (300) is adapted to:

compare a sensed speed and a sensed light with at least one speed threshold value and a light threshold value respectively; and

actuate the headlamp unit (200) to operate in a light mode of the plurality of light modes based on the comparison between the sensed speed with the at least one speed threshold value and the sensed light with the light threshold value.

11. The two-wheeler as claimed in claims 10, wherein the headlamp unit (200) is operated in:

a first light mode if the sensed speed is less than a first speed threshold value;

a second light mode if the sensed speed is greater than the first speed threshold value and less than or equal to a second speed threshold value and if the sensed light is greater than the light threshold value;

a third light mode if the sensed speed is greater than the second speed threshold value and less than or equal to a third speed threshold value and if the sensed light is greater than the light threshold value; and

a fourth light mode if the sensed speed is greater than the third speed threshold value and if the sensed light is greater than the light threshold value.

12. The two-wheeler as claimed in claims 11, wherein the headlamp unit (200) comprises:

a daytime running light (102) to be actuated in the first light mode of the plurality of light modes;

a front positioning light (104);

at least one low beam lamp (106) adapted to be actuated in the second light mode, the third light mode, and the fourth light mode of the plurality of light modes;

a high beam lamp (108) adapted to be actuated in the third light mode and the fourth light mode of the plurality of light modes; and

at least one booster lamps (110) adapted to be actuated in the fourth light mode of the plurality of light modes.

13. The two-wheeler as claimed in claims 10, wherein the control unit (300) comprises:

a speed sensing controller (204) adapted to compare the sensed speed and the at least one speed threshold value;

a LED controller (202) operably coupled to the speed sensing controller (204) and adapted to:

compare the sensed light with the light threshold value; and

actuate the headlamp unit (200) to operate in a light mode of the plurality of light modes based on the comparison between the sensed speed with the at least one speed threshold value and the sensed light with the light threshold value.

Dated this **15th** day of **February, 2022**

Manisha Singh
Agent for the Applicant [IN/PA-740]
LEXORBIS

Abstract Of The Invention

AUTOMATED PROGRESSIVE HEADLAMP ASSEMBLY

A headlamp assembly (100) for a two-wheeler is disclosed that includes a headlamp unit (200) configured to operate in a plurality of light modes. Each of the light modes is indicative of a degree of illumination by the light unit. In addition, the headlamp assembly (100) includes a speed sensor (208) adapted to sense the speed of the two-wheeler, an ambient light sensor (206) adapted to sense ambient light, and a control unit (300). The control unit (300) is adapted to compare the sensed speed with at least one speed threshold value and the sensed light with a light threshold value and accordingly actuates the headlamp unit (200) to operate in a light mode of the plurality of light modes based on the comparison between the sensed speed with the at least one speed threshold values and the sensed light with a light threshold value.

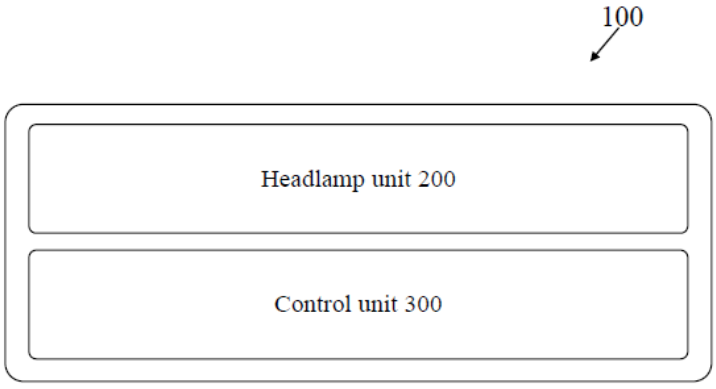

FIGURE 1

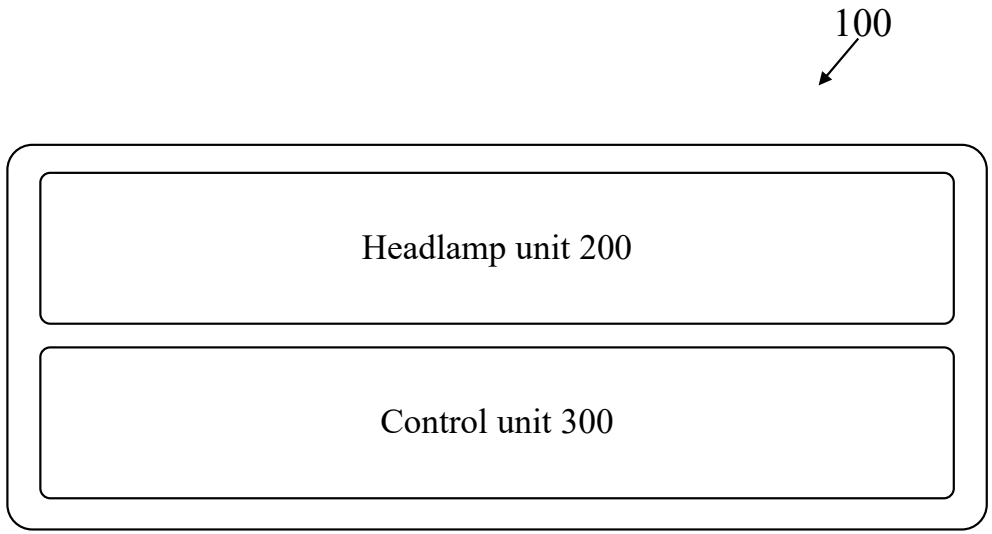

FIGURE 1

Manisha Singh
Agent for the Applicant [IN/PA-740]
LEXORBIS

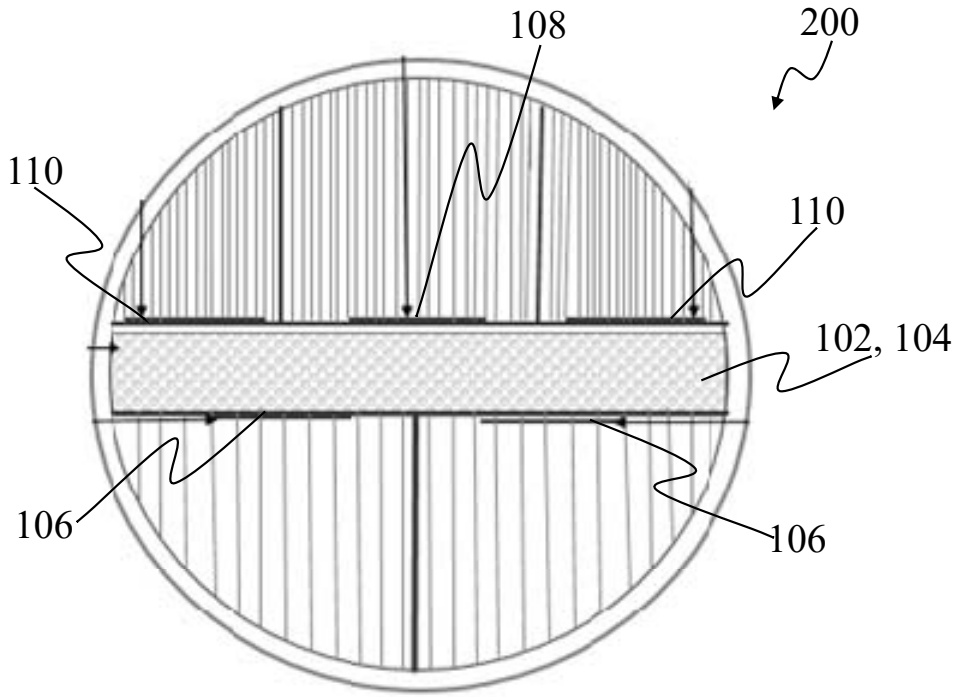

FIGURE 2

Manisha Singh
Agent for the Applicant [IN/PA-740]
LEXORBIS

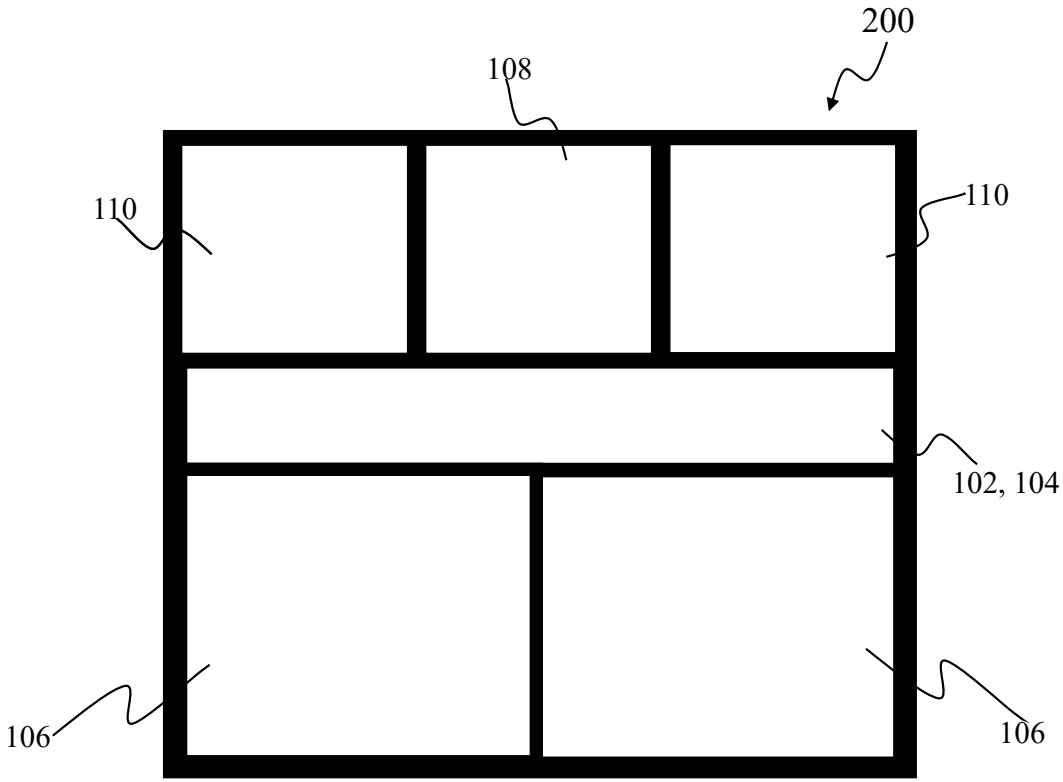

FIGURE 3

Manisha Singh
Agent for the Applicant [IN/PA-740]
LEXORBIS

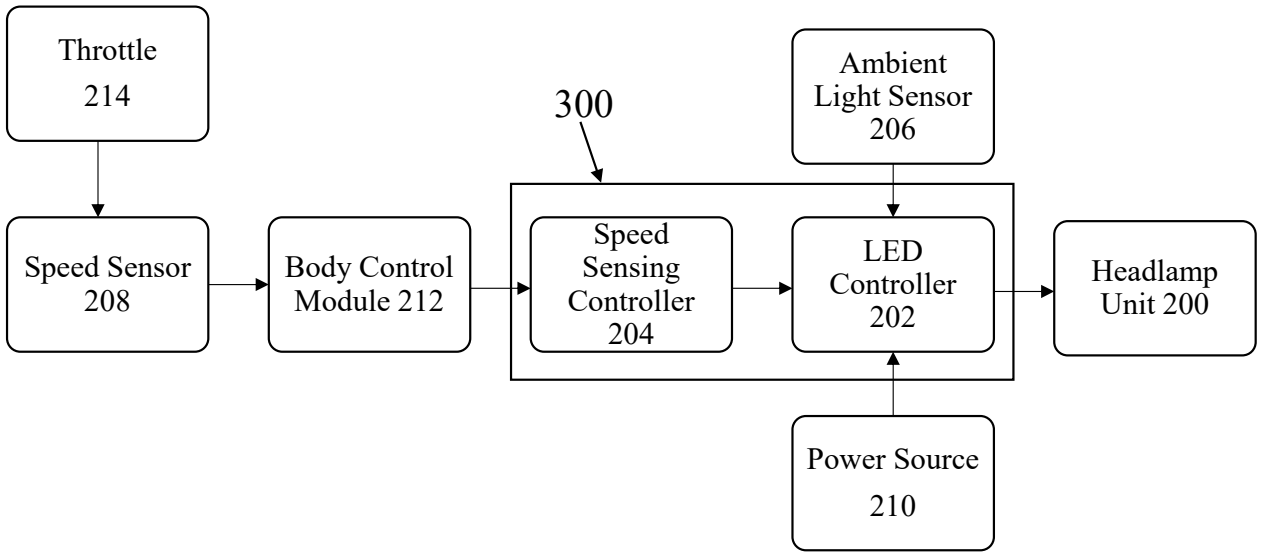

FIGURE 4

Manisha Singh
Agent for the Applicant [IN/PA-740]
LEXORBIS