US 20140157790A1

(19) United States

(12) Patent Application Publication

Forsberg

(10) Pub. No.: US 2014/0157790 A1

(43) Pub. Date: Jun. 12, 2014

(54) **COMBUSTOR ASSEMBLY AND METHODS OF USING SAME**

(71) Applicant: **ZILKHA BIOMASS POWER LLC**, Houston, TX (US)

(72) Inventor: **Lars Björn Forsberg**, Tystberga (SE)

(73) Assignee: **Zilkha Biomass Power LLC**, Houston, TX (US)

(21) Appl. No.: **13/709,939**

(22) Filed: **Dec. 10, 2012**

Publication Classification

(51) **Int. Cl.**
F23R 5/00 (2006.01)

(52) **U.S. Cl.**
CPC *F23R 5/00* (2013.01)
USPC **60/781**; 60/39.12

(57) **ABSTRACT**

One embodiment of the present disclosure relates to a combustor assembly which has a burner assembly and a combustor. The burner assembly has a body having a first end and a second end and a center passageway. The center passageway extends between the first end and the second end of the body. The body of the burner assembly is provided with a biomass inlet for receiving biomass, a primary air inlet for receiving air, a gas inlet for receiving gas, and a secondary air inlet for receiving air. The biomass inlet is in communication with the center passageway.

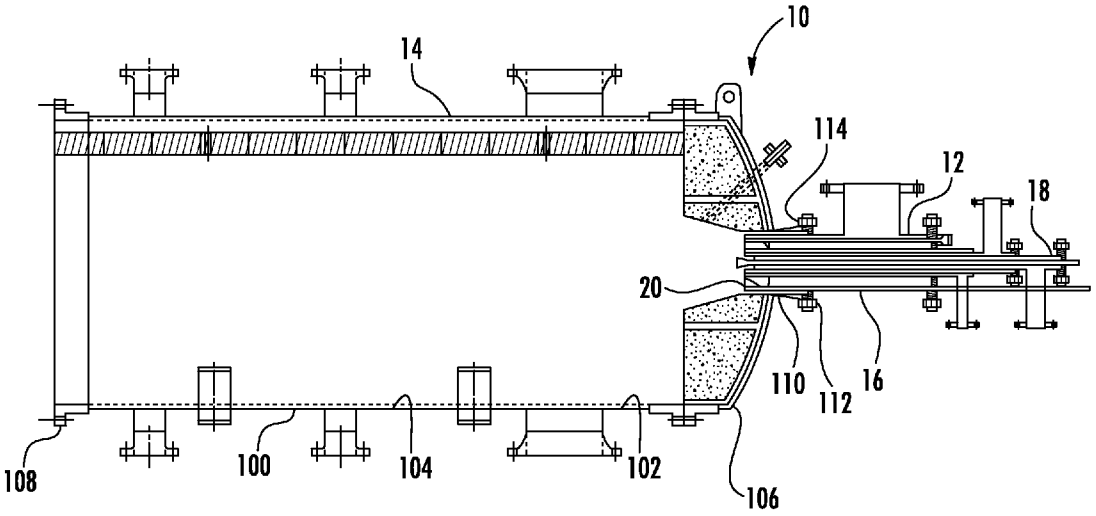

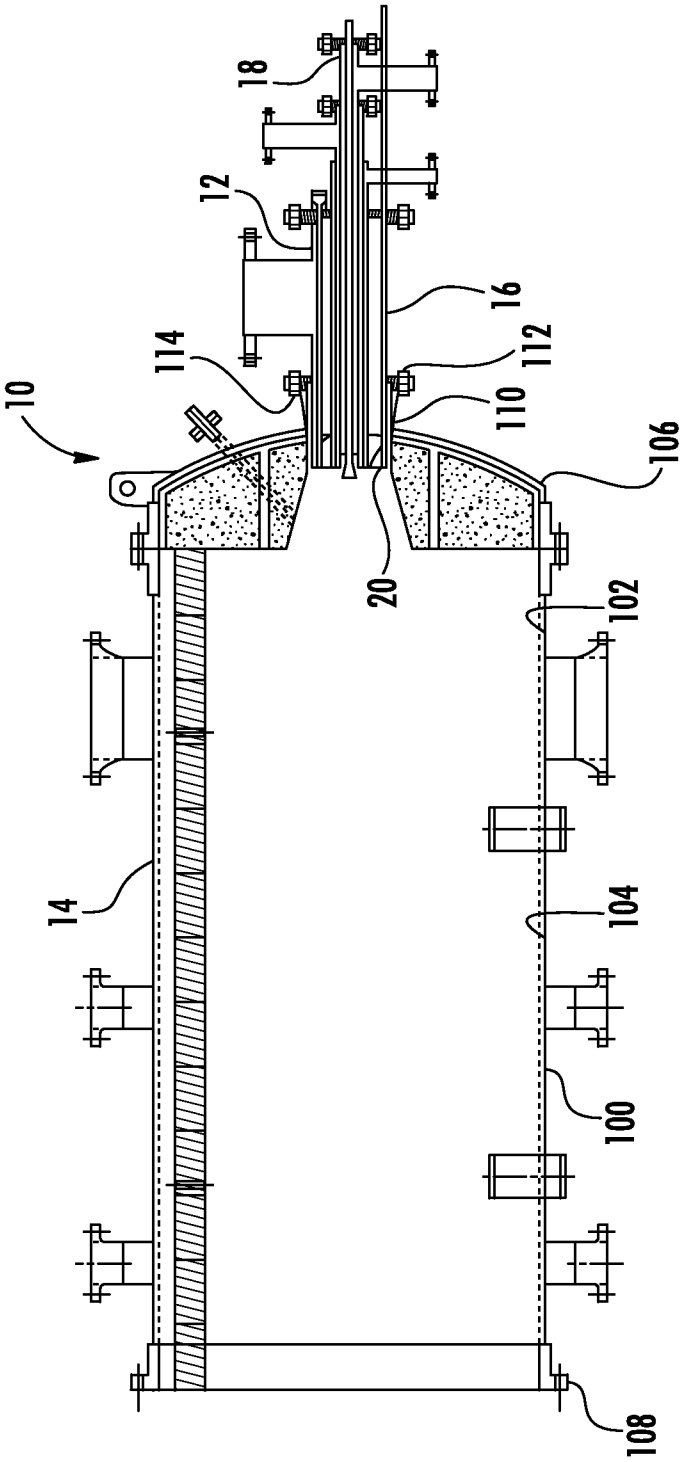

FIG. 1

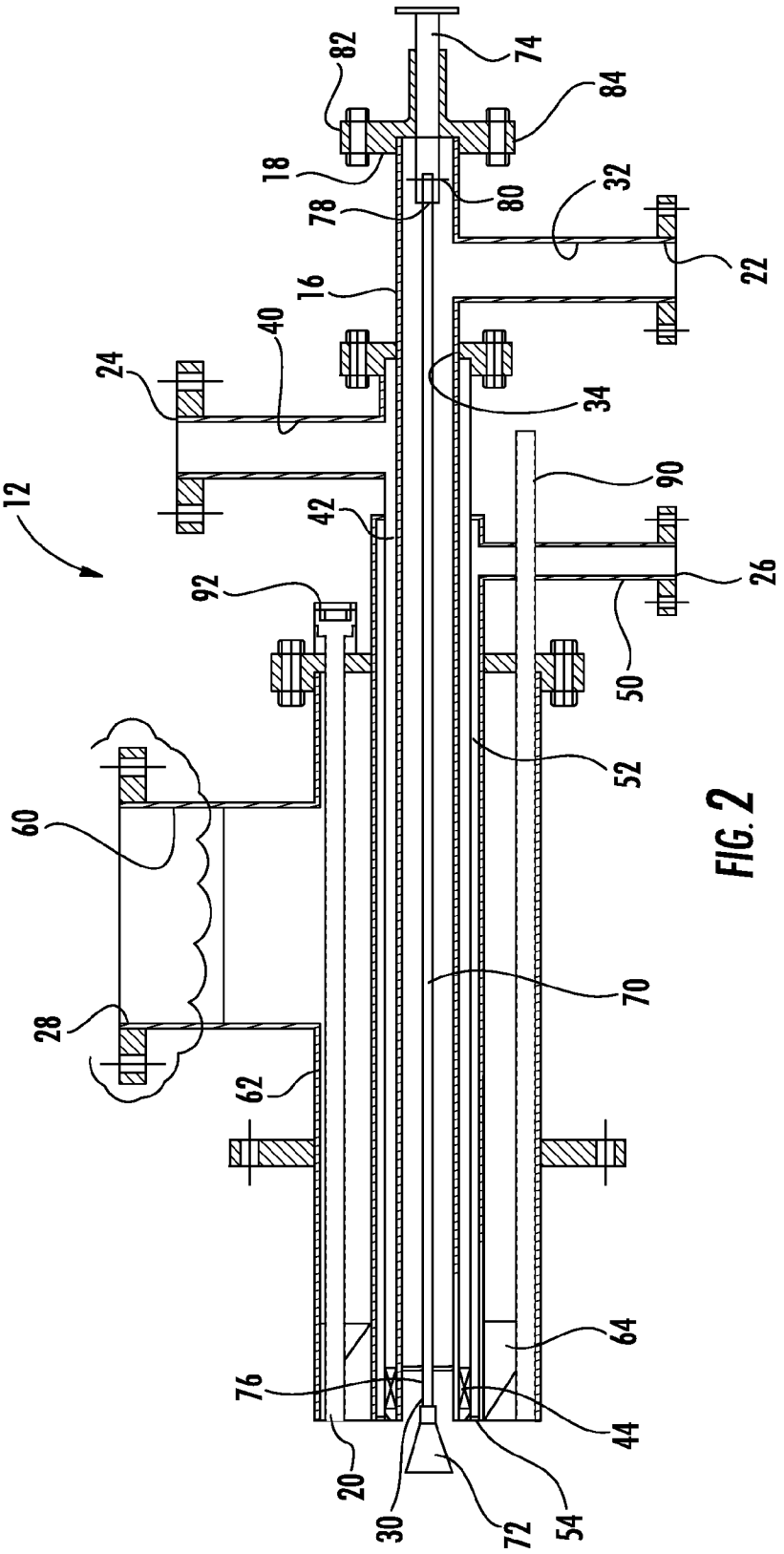
12
82
74
84
18
78
80
32
22
16
40
24
34
90
42
26
92
50
52
60
70
28
62
64
76
44
20
30
72
54

FIG. 2

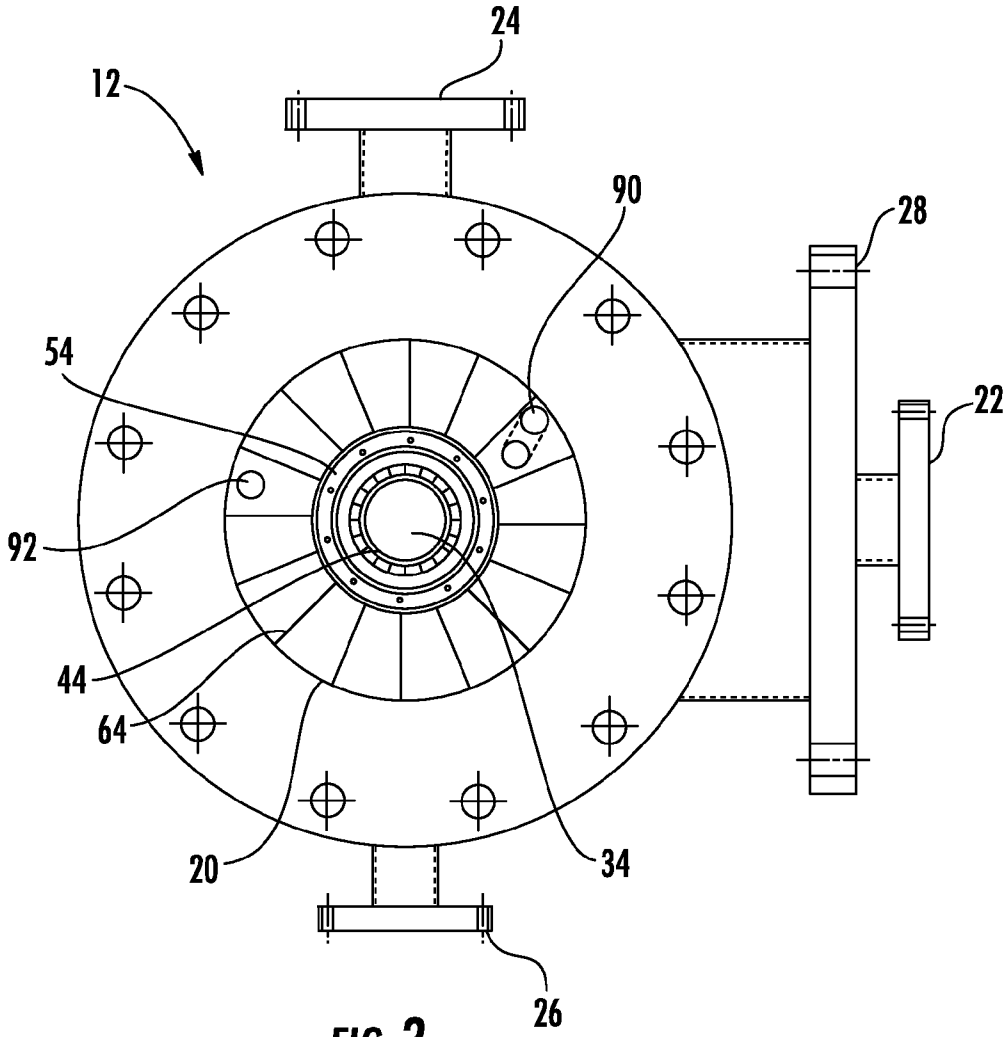

FIG. 3

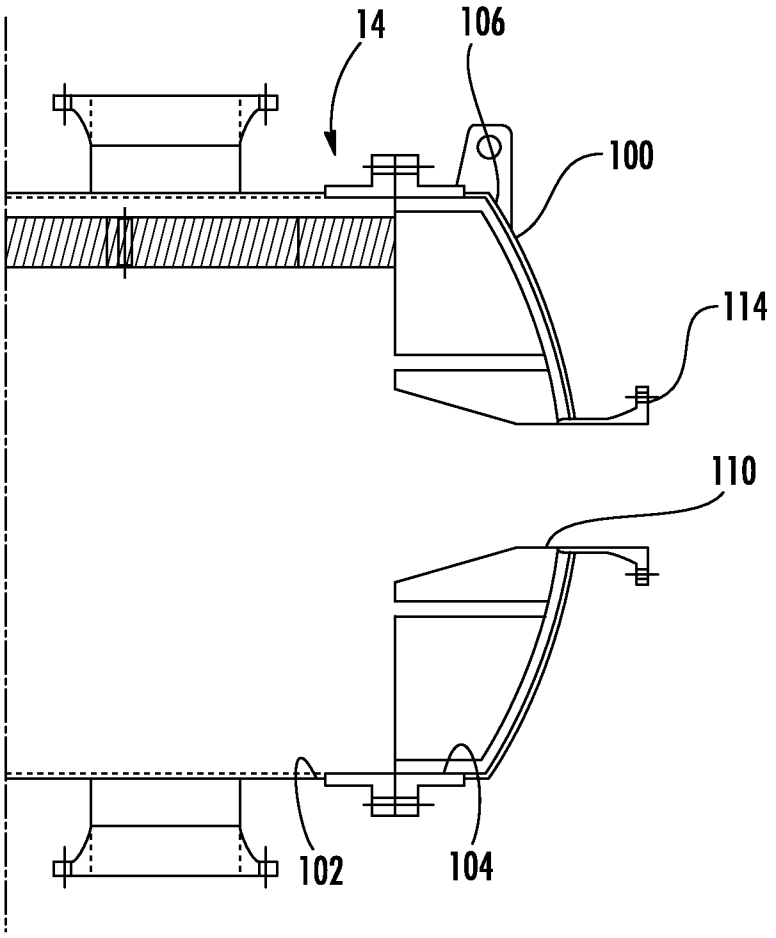

FIG. 4

COMBUSTOR ASSEMBLY AND METHODS OF USING SAME

CROSS REFERENCE TO RELATED APPLICATIONS

[0001] Not applicable.

STATEMENT REGARDING FEDERALLY SPONSORED RESEARCH OR DEVELOPMENT

[0002] Not applicable.

FIELD OF THE INVENTION

[0003] One embodiment of the present disclosure relates generally to a combustor assembly, more particularly, but not by way of limitation, to an improved combustor assembly and method for improving slagging in a combustor.

BACKGROUND OF THE INVENTION

[0004] Many power systems have a combustor which is operated by the controlled combustion of various solid fuel sources or feedstocks to generate electricity by driving gas turbines. Examples of solid fuel sources utilized in the systems are conventional fossil fuels, other hydrocarbons, and biomass. Examples of biomass include, but are not limited to sawdust, bark, twigs, branches, and other waste wood, bagasse, corn cobs, rice hulls, orchard and vine trimmings, and the like. However, typically, combustion of these fuels is incomplete, producing large amounts of waste material.

[0005] All solid fuels contain a mineral fraction that is mostly non-combustible and produces waste material, such as ash. Incomplete combustion of biomass produces ash that accumulates on a heat transfer or interior surface of a combustor. As molten ash cools, the ash accumulates on the interior surfaces of the combustion chamber causing various problems with the operation of the combustor and the power system. Deposit of formations of ash ("slagging") is one of the biggest problems of combustion of biomass. The ability of a system to reduce/improve slagging would lead to reduced investment and operational costs, increased performance efficiency, and reduced emissions.

[0006] To this end, although combustor assemblies are known in the art, further improvements are desirable to improve or reduce slagging in the combustor and to enhance the combustor assembly for complete combustion of a fuel source. It is to such an assembly and process that one embodiment of the present disclosure is directed.

SUMMARY OF THE INVENTION

[0007] A burner assembly includes a body, a biomass inlet, a primary air inlet, a gas inlet, and a secondary inlet. The body has a first end, an open second end, and a center passageway extending therebetween. The biomass inlet receives biomass such that the biomass inlet is in communication with the center passageway so that biomass is injected from the center passageway by the open second end along a tangential centerline of the body. The primary air inlet receives primary air. The gas inlet receives a gas. The secondary air inlet receives secondary air.

[0008] A combustor assembly includes a burner assembly and a combustor. A burner assembly includes a body, a biomass inlet, a primary air inlet, a gas inlet, and a secondary inlet. The body has a first end, an open second end, and a center passageway extending therebetween. The biomass inlet receives biomass such that the biomass inlet is in communication with the center passageway so that biomass is injected from the center passageway by the open second end along a tangential centerline of the body. The primary air inlet receives primary air. The gas inlet receives a gas. The secondary air inlet receives secondary air. The burner assembly is connected to a combustor.

[0009] A method of operating a combustor assembly. Biomass feed material is injected into a center passageway of a body of a burner assembly. Primary air, gas, and secondary air are injected into the body of the burner assembly. The biomass feed material is injected along a tangential centerline of the body of the burner assembly into a combustor.

BRIEF DESCRIPTION OF THE SEVERAL VIEWS OF THE DRAWINGS

[0010] FIG. **1** is a cross-sectional view of a combustor assembly constructed in accordance with the present invention.

[0011] FIG. **2** is a cross-sectional view of a burner assembly of the combustor assembly of FIG. **1**.

[0012] FIG. **3** is a front view of a second end of the burner assembly of FIG. **2**.

[0013] FIG. **4** is a cross-sectional view of a portion of a combustor of the combustor assembly of FIG. **1**.

DETAILED DESCRIPTION OF THE INVENTION

[0014] Referring now to the drawings, and more particularly to FIG. **1**, shown therein is one embodiment of a combustor assembly **10** constructed in accordance with the present disclosure. The combustor assembly **10** includes a burner assembly **12** and a combustor **14**. It should be understood by one of ordinary skill in the art that the combustor assembly **10** may be utilized in a system having a feed system and a gas turbine. The feed system may be any such system for feeding biomass into a system known to one of ordinary skill in the art so long as the feed system functions in accordance with the present invention. Further, the gas turbine may be any suitable gas turbine known by one of ordinary skill in the art. For example, the gas turbine may be a gas-fired turbine. Also, the gas turbine may have any of a variety of pressure ratios, for example, gas turbines suitable for use may have pressure ratios in the range of from about 4:1 to about 20:1. Furthermore, the gas turbine may be capable of dual firing, wherein the gas turbine may be fired using an auxiliary fuel, for example, gas, propane, or a liquid fuel.

[0015] Referring now to FIGS. **1-3**, generally, one embodiment of the burner assembly **12** includes a body **16** having a first end **18**, a second end **20**, a biomass inlet **22**, a primary air inlet **24**, a gas inlet **26**, and a secondary air inlet **28** and a powder cone assembly **30**. The body **16** may be any size and shape so long as the body **16** functions in accordance with the present disclosure. The biomass inlet **22** is provided for receiving biomass from a feed system (not shown). Biomass may include any suitable source of biomass, including, sawdust, bark, twigs, branches, other waste wood, bagasse, corn cobs, rice hulls, orchard and vine trimmings, sludge, manure, and combinations thereof. In one embodiment, the biomass supplied to the combustor assembly **10** includes a wood-based biomass. The biomass supplied to the combustor assembly **10** may be sized so that it has a major dimension of less than about 3 millimeters ("mm"). Further, the biomass

also may have moisture content suitable for combustion, for example, the biomass may be dried so that they have a moisture content of less than about 30% and, in one embodiment, a moisture content in the range of from about 0% to about 20%. Those of ordinary skill in the art should recognize that combustion generally may have various feed requirements (e.g., size, moisture content, etc.). Further, it should be understood by one of ordinary skill in the art that although biomass is used, by way of example, as the fuel source for the combustor assembly **10**, any known fuel source may be utilized, such as fossil fuels and the like, so long as the fuel used allows the combustor assembly **10** to function in accordance with the present disclosure as described herein.

[0016] Biomass is fed through the biomass inlet **22** to the biomass intake tube **32** which is in communication with a substantially center passageway **34** extending between the first end **18** and the second end **20** of the body **16** of the burner assembly **12**. The position and configuration of the center passageway **34** of the burner assembly **12** allows for centerline tangential injection of the biomass feed into the combustor **14**. Centerline injection of the feed into the combustor **14** keeps ash off an interior surface of the combustor **14** which improves slagging in the combustor **14**.

[0017] Primary air is provided to the body **16** through the primary air inlet **24** to the primary air intake tube **40** which is in communication with a primary air tube **42**. The primary air tube **42** is in communication with a primary air register **44**.

[0018] Gas, such as propane, butane, propane-butane mix, methane, and the like, is provided to the body **16** through the gas inlet **26** to the gas intake tube **50** which is in communication with a gas tube **52**. The gas tube **52** is in communication with a gas ring **54**.

[0019] Secondary air is fed to the body **16** through the secondary air inlet **28** to the secondary air intake tube **60** which is in communication with a secondary air tube **62**. The secondary air tube **62** is in communication with a secondary air register **64**. It should be understood by one of ordinary skill in the art that the primary air and the secondary air may be air, pure oxygen, and/or oxygen-enriched air in various proportions.

[0020] The primary air register **44**, the gas ring **54**, and the secondary air register **64** are disposed in a concentric configuration about the center passageway **34** (FIG. **3**). The concentric configuration allows for the centerline tangential injection of the biomass feed from the center passageway **34** into the combustor **14**.

[0021] The powder cone assembly **30** is provided with a rod **70**, a powder cone **72**, and a threaded rod **74**. The rod **70** having a first end **76** and a second end **78** is substantially disposed in the center passageway **34** of the body **16** of the combustor assembly **10**. The powder cone **72** is disposed on the first end **76** of the rod **70**. One end of the threaded rod **74** is connected to the second end **78** of the rod **70** with a pin **80**. The threaded rod **74** is connected to an internally threaded flange **82** which is connected to a flange **84** disposed on the first end **18** of the body **16** of the burner assembly **12**. The distance between the powder cone **72** and the open second end **20** of the body **16** of the burner assembly **12** may be varied by moving the threaded rod **74** so that the rod **70** moves between a first direction and a second direction. In the first direction, the powder cone **72** moves away from the second end **20** of the body **16** of the burner assembly **12** and in the second direction, the powder cone **72** moves toward the second end **20** of the body **16** of the burner assembly **12**. It should be understood that the powder cone **72** may be configured in various ways so long as the powder cone **72** is movable between the first and second directions as described herein.

[0022] The body **16** of the burner assembly **12** is also provided with a flame detector **90** for monitoring the formation of a stable combustion region in the burner assembly **12** and a sight glass **92**.

[0023] Referring now to FIGS. **1** and **4**, broadly, the combustor **14** includes a housing **100** and a chamber **102** having a sidewall **104** disposed in the housing **100**. The housing **100** has a first end **106** and a second end **108**. The first end **106** of the housing **100** is provided with an opening **110** disposed substantially along a centerline of the housing **100** of the combustor **14**. The opening **110** substantially tapers outwardly from the first end **106** of the housing **100** of the combustor **14** toward the chamber **102** of the housing **100**.

[0024] The second end **20** of the body **16** of the burner assembly **12** and the first end **106** of the housing **100** of the combustor **14** are shaped and configured so that the second end **20** of the body **16** of the burner assembly **12** is disposed in the chamber **102** of the housing **100** of the combustor **14**. The second end **20** of the body **16** of the burner assembly **12** is provided with a flange **112** for connecting to an external flange **114** extending a distance from the first end **106** of the housing **100** of the combustor **14** which connects the burner assembly **12** to the combustor **14**. It should be understood by one of ordinary skill in the art that the combustor **14** may be any size and shape so long as the combustor **14** functions in accordance with the present disclosure as described herein.

[0025] From the above description, it is clear that the present disclosure is well adapted to carry out the objects and to attain the advantages mentioned herein, as well as those inherent in the invention. While present embodiments have been described for purposes of this disclosure, it will be understood that numerous changes may be made which will readily suggest themselves to those skilled in the art and which are accomplished within the spirit of the invention as disclosed and claimed herein.

What is claimed is:

1. A burner assembly, comprising:

a body having a first end and an open second end and a center passageway extending therebetween;

a biomass inlet for receiving biomass such that the biomass inlet is in communication with the center passageway so that biomass is injected from the center passageway by the open second end along a tangential centerline of the body;

a primary air inlet for receiving primary air;

a gas inlet for receiving a gas; and

a secondary air inlet for receiving secondary air.

2. The burner assembly of claim **1** further comprising a biomass intake tube in communication with the center passageway of the body.

3. The burner assembly of claim **1** wherein the primary air inlet is in communication with a primary air register.

4. The burner assembly of claim **1** further comprising a gas ring in communication with the gas inlet.

5. The burner assembly of claim **1** wherein the primary air is air, pure oxygen, or oxygen-enriched air.

6. The burner assembly of claim **1** wherein the secondary air is air, pure oxygen, or oxygen-enriched air.

7. The burner assembly of claim **1** further comprising a powder cone substantially disposed in the center passageway of the body of the burner assembly.

8. The burner assembly of claim **7** wherein the powder cone is movable so that the distance varies between the powder cone and the second end of the body of the burner assembly.

9. A combustor assembly, comprising:

a burner assembly comprising:

a body having a first end and an open second end and a center passageway extending therebetween;

a biomass inlet for receiving biomass such that the biomass inlet is in communication with the center passageway so that biomass is injected from the center passageway by the open second end along a tangential centerline of the body;

a primary air inlet for receiving primary air;

a gas inlet for receiving a gas; and

secondary air inlet for receiving secondary air; and

a combustor connected to the burner assembly.

10. The combustor assembly of claim **9** further comprising a biomass intake tube in communication with the center passageway of the body.

11. The combustor assembly of claim **9** wherein the primary air inlet is in communication with a primary air register.

12. The combustor assembly of claim **9** further comprising a gas ring in communication with the gas inlet.

13. The combustor assembly of claim **9** wherein the primary air is air, pure oxygen, or oxygen-enriched air.

14. The combustor assembly of claim **9** wherein the secondary air is air, pure oxygen, or oxygen-enriched air.

15. The combustor assembly of claim **9** further comprising a powder cone substantially disposed in the center passageway of the body of the burner assembly.

16. The combustor assembly of claim **15** wherein the powder cone is movable so that the distance varies between the powder cone and the second end of the body of the burner assembly.

17. The combustor assembly of claim **9** wherein the second end of the body of the burner assembly and an end of the combustor are shaped and configured so that the second end of the body of the burner assembly is disposed in a portion of the combustor.

18. A method of operating a combustor assembly, comprising the steps of:

injecting a biomass feed material into a center passageway of a body of a burner assembly;

injecting primary air into the body of the burner assembly;

injecting gas into the body of the burner assembly;

injecting secondary air into the body of the burner assembly; and

injecting the biomass feed material along a tangential centerline of the body of the burner assembly into a combustor.

19. The method of claim **18** further comprising drying the biomass feed material to a moisture content of less than about 30%.

20. The method of claim **18** further comprising:

moving a powder cone of the burner assembly a distance between the powder cone and an end of the body of the burner assembly.

* * * * *