Nov. 16, 1971 T. R. CAIN ET AL 3,619,820

TOILET SEAT AUXILIARY

Filed April 24, 1970

FIG. 1.

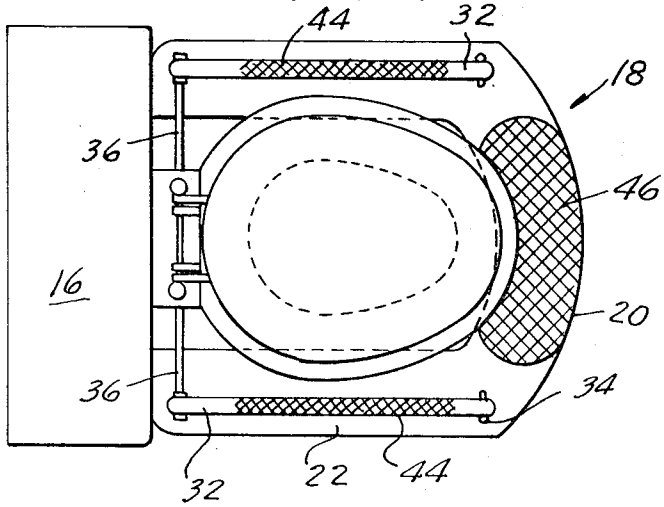


FIG. 4.

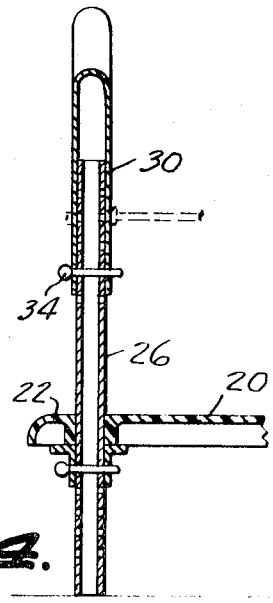


FIG. 2.

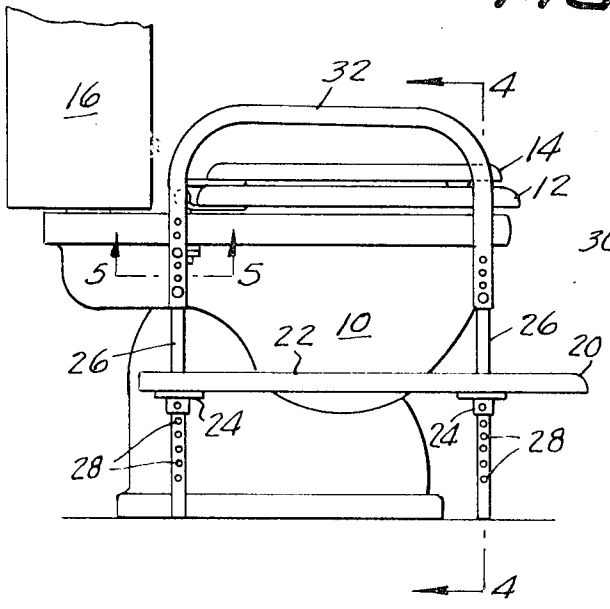


FIG. 3.

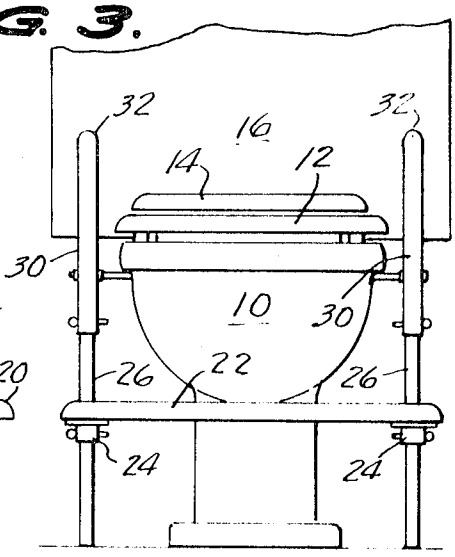


FIG. 5.

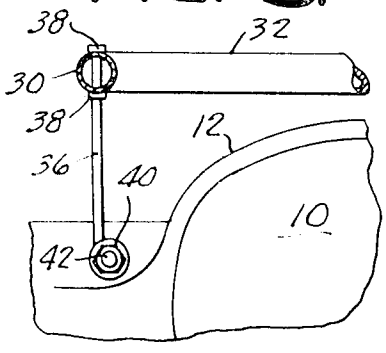


INVENTORS
THOMAS R. CAIN,
ODAS V. MEDLOCK,
BY
Berman, Davidson & Berman,
ATTORNEYS.

United States Patent Office 3,619,820 Patented Nov. 16, 1971



3,619,820

# TOILET SEAT AUXILIARY

Thomas R. Cain, 22320 Funston, Hawaiian Gardens, Calif. 90716, and Odas V. Medlock, 19907 S. Jersey Ave., Lakewood, Calif. 90715

Filed Apr. 24, 1970, Ser. No. 31,619
Int. Cl. A47k 17/02
U.S. Cl. 4—9 7 Claims

## ABSTRACT OF THE DISCLOSURE

A toilet seat comprising a U-shaped member supported at a level below a toilet seat by collars vertically adjustable on supporting legs, said legs penetrating said U-shaped member and having telescopic engagement with downwardly extending portions of a pair of arm rests, said telescopic engagement being vertically adjustable. A portion of said arm rests and a portion of the cross part of said U-shaped member being finished with a highly frictional surface.

The present invention is intended to be of assistance to small children and infirm adults in the use of a conventional toilet. In the case of small children, a portion of the device serves as a "mounting block" and arm rests or hand grips are provided at each side of the seat to assist either children or infirm adults in sitting on or arising from the standard toilet seat.

The above and other objects will be made clear from the following detailed description taken in connection with the annexed drawing, in which:

FIG. 1 is a top plan view of a toilet with the device of this invention in place;

FIG. 2 is a side elevation of FIG. 1;

FIG. 3 is a front elevation of FIG. 1;

FIG. 4 is a section on the line 4—4 of FIG. 2; and

FIG. 5 is a section on the line 5—5 of FIG. 2.

In the drawings there is shown a conventional toilet bowl **10**, to which are pivoted a conventional seat **12** and a conventional lid **14**. A conventional flush tank **16** is also provided.

Essentially, the device or adjunct of this invention comprises a horizontally disposed, planar U-shaped member generally designated **18**. It has a cross member **20** and a pair of parallel legs **22**. The member **18** is vertically supported at a level well below the seat **12** on a plurality of collars **24**, each of which is supported on and surrounds a vertical leg **26** which penetrates the legs **22** and has in its lower portion a series of perforations **28** to which cotter pins or the like may be passed to support the collars **24**. At their upper ends, the legs **26** each engage a leg **30** of a pair of U-shaped members, the upper cross portions **32** of which extend on opposite sides of the seat **12**. In the extent of telescopic engagement, both the legs **30** and the upper portions of legs **26** are perforated and are vertically adjustable by means of pins passing through mating perforations. Such as adjustment is best illustrated in FIG. 4, in which a pin **34** is shown passing through mating perforations of an upright **26** and a leg **30**.

If necessary or desired, the rearward vertical members **30** may be anchored by means of rods **36** (FIG. 1) which, as shown in FIG. 5, pass through the legs **30**, being secured thereto by nuts **38**. The rods **36** have loops **40** which may be placed over the conventional studs **42** which support the hinges of the seat **12** and the lid **14**. The forward legs **30**, of course, are anchored, by the cross member **20**.

Given proper adjustment of vertical member **18**, a small child can use the cross member **20** for assistance in mounting the seat or in urinating from a standing position. The cross member **20** does not extend so far forward as to interfere with normal adult use of the toilet. The arms **32** are also vertically adjustable to a position comfortable and convenient for an infirm adult who may use these cross arms **32**, for assistance, both in sitting upon and rising from the seat **12**.

As indicated at **44** in FIG. 1, both of the arms **32** have a portion at least of their upper surface, coated or otherwise treated, to provide a highly frictional or "non-skid" surface, and a similar area **46** is provided on the upper surface of the cross member **20**.

No doubt, changes of detail will suggest themselves to anyone skilled in the art who peruses this specification. The invention, therefore, is not limited to the precise details disclosed herein.

What is claimed is:

**1.** An adjunct to a standard toilet assembly, said adjunct comprising a horizontally disposed, planar U-shaped member to encompassing the front and sides of the bowl portion of said standard toilet assembly; means supporting said member at a predetermined distance between the floor line and the seat of said toilet; arm rest means extending on each side of said toilet seat and located above said seat, said arm rest means being supported by said member supporting means.

**2.** The adjunct of claim **1** in which said member supporting means penetrate said U-shaped member and support said arm rest means.

**3.** The adjunct of claim **1** including means whereby said U-shaped member is vertically adjustable on said member supporting means.

**4.** The adjunct of claim **2** including means whereby said arm rest means are vertically adjustable on said member supporting means.

**5.** The adjunct of claim **1** in which the forward portion of said U-shaped member has its upper surface finished to afford protection to the user against slipping.

**6.** The adjunct of claim **1** in which at least a portion of the upper surface of said arm rest means is so finished as to resist the user slipping.

**7.** The adjunct of claim **1** in which at least a portion of the upper surface of said U-shaped member is so finished as to resist the user slipping.

**References Cited**

UNITED STATES PATENTS

| | | | |
|---|---|---|---|
| 582,247 | 5/1897 | Weston et al. | 4—237 X |
| 848,229 | 3/1907 | Farley | 4—234 |
| 1,004,458 | 9/1911 | Morton | 4—239 |
| 1,085,468 | 1/1914 | Nixon | 4—239 |
| 1,737,163 | 11/1929 | Keppinger | 4—239 |
| 1,817,520 | 8/1931 | Meath | 4—239 |
| 2,642,117 | 6/1953 | Glauber | 4—237 |
| 1,972,233 | 9/1934 | Moulder | 4—235 |

FOREIGN PATENTS

| | | | |
|---|---|---|---|
| 1,499 | 3/1895 | Great Britain | 4—235 |
| 747,638 | 4/1956 | Great Britain | 4—234 |
| 1,166,849 | 6/1958 | France | 4—235 |
| 553,845 | 6/1932 | Germany | 4—234 |

LAVERNE D. GEIGER, Primary Examiner
D. B. MASSENBERG, Assistant Examiner

U.S. Cl. X.R.
4—237