July 25, 1944. F. W. E. WEISSE 2,354,563

MAGNETIC DRIVE

Filed April 26, 1940

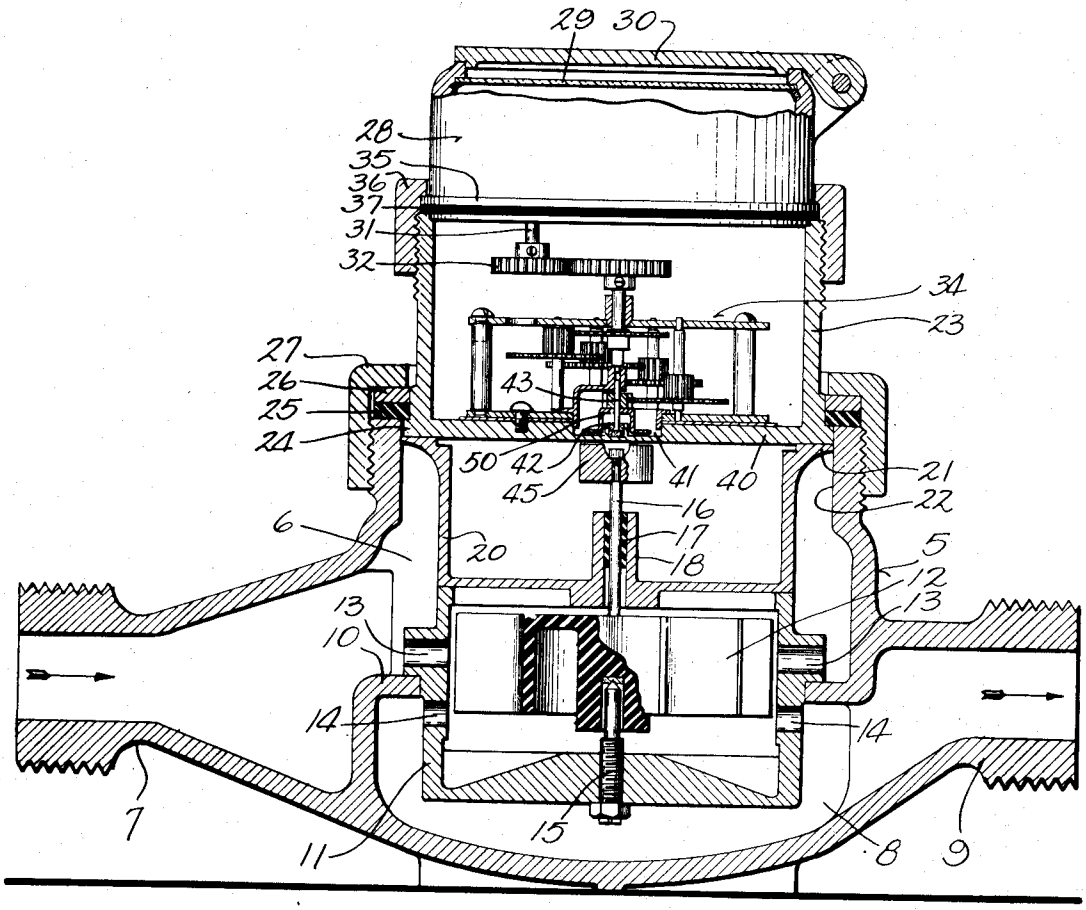

Fig. 1.

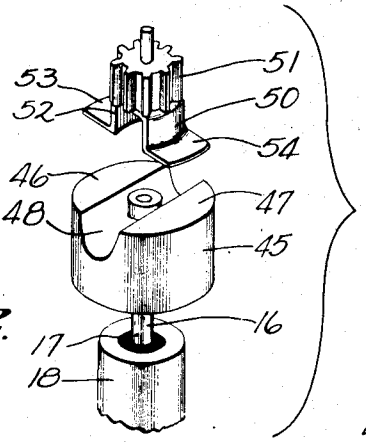

Fig. 2.

INVENTOR
FRANK W. E. WEISSE

BY
Wheeler, Wheeler & Wheeler
ATTORNEYS.

Patented July 25, 1944 2,354,563

UNITED STATES PATENT OFFICE

2,354,563

MAGNETIC DRIVE

Frank W. E. Weisse, Corpus Christi, Tex., assignor to Badger Meter Mfg. Company, Milwaukee, Wis., a corporation of Wisconsin

Application April 26, 1940, Serial No. 331,828

9 Claims. (Cl. 73—272)

This invention relates to improvements in magnetic drives as particularly adapted for meter use.

The objects of the invention include the provision of a novel simplified magnetic drive arrangement of the type in which the driving member operates by rotation as distinguished from oscillation, and in which the construction is such as to transmit a maximum of energy with a minium loss of magnetism and a minimum loss of energy through friction. More specifically, I seek to minimize friction by completely eliminating the stuffing box and by eliminating all gearing from the connections to the driving element; to minimize corrosion, wear and sand trouble by disposing of gearing in a compartment hermetically sealed; to provide for a non-slip magnetic coupling between the motor shaft and the driven register shaft, notwithstanding the elimination of gearing from the meter chamber, by an arrangement permitting the use of an extremely lightweight keeper; to minimize magnetic losses by the particular magnet and keeper construction employed and by the peculiar form of the plate partition through which the magnetic drive is effected, the partition being so designed as to present a very thin partition wall at the point of the magnetic drive and a considerably thicker wall elsewhere to provide adequate strength; and to minimize loss of magnetism from the driving element while at the same time protecting the driving element against the possibility of damage by freezing by the use of a substantially circular magnet of extremely small diameter, whereby the distance traveled by the poles is kept at a minimum and the external shape is such that ice forming about the magnet will not under any ordinary circumstances be able to form itself in such a way as to lock the magnet against rotation.

Other objects will be apparent to those skilled in the art upon analysis of the following disclosure of the invention.

In the drawing:

Fig. 1 shows, partially in side elevation but largely in vertical axial section, a meter embodying this invention.

Fig. 2 is a fragmentary detail view, showing in perspective the component elements comprising the drive.

Like parts are identified by the same reference characters throughout the several views.

The meter comprises a casing at 5 having an inlet compartment 6 supplied through a coupling spud 7 and an outlet compartment 8 discharging through a coupling spud 9. The two compartments are separated in the usual manner by a partition at 10, apertured to receive the motor chamber 11. It is broadly immaterial what kind of a motor is used. For purposes of illustration I have shown a rotor 12 of the turbine type supplied with fluid through the ports 13, which, in this type of meter, will usually be tangential. However, it should be understood that this driving mechanism may be applied to any liquid measuring device. Below the rotor 12 there are discharge ports 14 opening from the meter chamber 11 into the outlet compartment 8 and usually likewise tangential so that the liquid traversing motor chamber 11 will travel therethrough in a substantially uninterrupted vortex.

The rotor 12 is adjustably supported on a bearing screw 15. Extending upwardly from the rotor is the motor shaft 16 which carries an element of the magnetic drive hereinafter to be described.

The shaft 16 turns freely in a bushing 17, which, if made of rubber or the like, as preferred, will be almost frictionless in the presence of the water or other liquid usually handled by the meter. The bushing 17 is disposed in a tubular boss 18 rising from the bottom of a cup-shaped closure 20 for the motor chamber. At its upper end the cup-shaped closure member 20 is flanged outwardly at 21 to fit within the bearing portion 22 of the meter casing 5 and to provide a seat for the gear casing 23. It is not necessary that the cup-shaped closure member 20 should have its interior sealed in any way from access of the metered liquid thereto. It is sufficient if there is substantially no active flow of the metered liquid through the interior of member 20, the fit of the parts being sufficiently close so that in the absence of active flow there is little likelihood of any sand or other foreign matter penetrating the interior of member 20.

The gear casing 23 likewise comprises a cup-shaped member preferably provided with a flange 24 projecting laterally from its bottom portion to provide a shoulder engaged by gasket 25 and annular metal retainer 26 under compression of the annular nut 27 which is threaded to the exterior of the barrel portion 22 of the meter casing 5.

At its top the gear casing 23 is hermetically sealed by the register casing 28, itself an hermetically closed unit in which the usual cover glass 29 protected by the hinge plate 30, permits inspection of the conventional dials (not shown), driven by shaft 31 and gear 32 from the gear train designated in its entiretly by reference

character 34. The register casing 28 has a flange 35 whereby the annular nut 36 threaded to the gear train housing 23 can exert pressure on the gasket or packing at 37 to provide a seal for the cup-shaped gear train housing 23.

The bottom wall 40 of the gear train housing 23 has to be of reasonably heavy construction to resist the pressure in the interior of the meter and to avoid distortion from any other cause, as the slightest distortion might destroy the proper interfitting of the various parts. Yet it is important that the magnetic force relied upon to effectuate a drive between the motor shaft 16 and the gear train should be maintained at a maximum—first, by bringing the magnet and the keeper as close together as possible, and secondly, by avoiding the losses of magnetism consequent upon rotation of any magnet in proximity to any large mass of metal.

In the particular construction herein disclosed, instead of employing a plurality of plies of metal, I get substantially the same effect by recessing at 41 the bottom wall 40 of the gear train housing 23 to leave at the point where the magnetic drive is effected a wafer-thin partition between the meter casing proper and the gear train housing. Since the driving and driven elements of the magnetic drive preferably do not exceed about one-half inch in diameter, even for meters of large size, and the recess 41 is only slightly larger, it will be apparent that the desired reduction in thickness at the point of magnetic drive can be brought about without any material sacrifice of the strength of the bottom wall 40 as a whole.

The recess 41 is preferably annular. In forming it an annular flange is left at 42 to confine and locate a bearing within which the driving shaft 43 of the gear train 34 is supported.

It will be noted from the illustration that the gear train as a whole is exceptionally light. This is desirable in order to reduce its inertia so that at any sudden stopping or starting of the motor the keeper will inevitably follow the magnet without slip. (In the interests of this same lightness, the magnet, rather than the keeper, is preferably the driving element of the magnetic drive shortly to be described.) This lightness is made possible by the fact that no gearing whatever is located below the partition wall 40, this, in turn, being possible only because the arrangement disclosed eliminates the resistance of packing, and also eliminates resistance attributable to corrosion or to sand by hermetically sealing the entire gear train in the casing member 23.

For reasons already indicated, the magnet 45, best shown in Figure 2, is mounted on the motor shaft 16, is circular or substantially circular in horizontal plan, and has its poles 46 and 47 separated only by a shallow groove at 48. In actual practice it is found that there is practically no tendency for ice forming within the meter to key itself to a magnet of this particular form in such a way as to impede the rotation of the motor shaft. The only portion of the magnet to which the ice can possibly key itself is the groove 48 between the poles. This groove is not only very small in cross section so that the ice key can readily be broken, if formed, but, in addition, the overall radius of the magnet is so small as to give the motor a very substantial increase in mechanical advantage as compared with magnets heretofore used.

The small diameter of the magnet, preferably not greatly exceeding a half an inch, makes it possible for the wall thickness at the bottom of the recess 41 to be reduced without loss of strength very materially below the thickness that would be necessary if a larger magnet were employed. This in turn gives the magnet the driving effect which would normally be expected only of a much larger magnet, because of the very close coupling that is possible between the magnet and the keeper, due to the extreme thinness of the partition wall at the bottom of the recess 41. Inasmuch as this extreme thinness of the partition wall is achieved at the point where the magnet drive is effected, there is no substantial mass of metal intervening between the magnet and the keeper, and thus the loss of magnetism which would normally be expected through rotation of the magnet in the presence of a more substantial mass of metal is avoided. Furthermore, the small diameter of the magnet also protects against loss of magnetism in that losses of magnetism are attributable not to the angular degree of rotation but to the linear travel of the magnetic poles respecting an adjacent mass of metal. Thus, by the small radius of the arm traversed by the poles 46 and 47 of the magnet, the extent of linear travel is minimized in proportion to the angular travel of the poles.

The keeper 50 is attached to shaft 43 immediately below the pinion 51 through which the rest of the gear train 34 is driven. The keeper preferably comprises a thin and lightweight piece of sheet metal formed upwardly at its center at 52 to provide clearance for the flange 42 within which the bearing shaft 43 is located. The ends 53 and 54 of the keeper are flanged outwardly in substantial parallelism with the partition to overlie the poles 46 and 47 of the magnet. As previously noted, the construction permits the pole flanges 53 and 54 of the keeper to operate in extremely close proximity to the poles of the magnet.

The effectiveness of the coupling achieved by this construction is remarkable for parts of such small radius. Under the most extreme circumstances encountered in meter operation there is no lag or slip of any kind. Even if the gear train be driven backwards to turn the keeper at a high rate of speed, and its operation is then suddenly arrested, the inertia of the magnet and the rotor will not be sufficient to cause any substantial overrun. It is therefore possible to interchange the keeper and the magnet, using the keeper rather than the magnet, as the driving element. It is, however, preferred to minimize the possibility of slippage by using the organization herein disclosed, a further advantage lying in the fact that it is easier to make the U-shaped magnet resistant to ice stoppage than to produce the same effect with the U-shaped keeper.

I prefer that the keeper be made of very light sheet metal and that the power of the magnet be sufficiently in excess of that actually required for operation so that the keeper may, in the first instance, be completely saturated. Thus, insofar as the magnet may gradually be reduced in strength over a long period of use, the reduction will have little or no effect on the amount of flux passing through the saturated keeper, thus maintaining the coupling substantially constant until the magnet has lost a very substantial portion of its original strength.

While my improved magnetic drive has been described and its advantages indicated with particular reference to meter problems, I regard the magnetic drive as having utility for many other purposes.

I claim:

1. A magnetic drive comprising the combination of a magnet element and a keeper element, whereof at least one of said elements is a disk-shaped member substantially circular in outline mounted for rotation upon its axis and having one of its ends provided with a substantially unbroken surface except where traversed by a single transverse groove defining separate pole portions of said member.

2. In a meter having a water confining partition, a magnetic drive through said partition comprising the combination with driving and driven elements mounted for free rotation, each of which is U-shaped to provide distinct pole portions, one of said elements disposed on the water retaining side of the partition comprising a magnetic member substantially circular in overall outline in transverse section with an end having a generally flat face with poles defined by a single transverse groove, and the other of said elements, exteriorly of said partition, comprising a keeper member of light sheet metal.

3. In a meter, the combination with a meter casing, of an hermetically sealed gear train casing constituting a closure for said first mentioned casing and having an unbroken wall completely partitioning the interior of the gear train casing from the interior of the meter casing, a fluid motor operable in the meter casing, a gear train operable in the gear train casing, a motor shaft leading to the proximity of said wall, a magnetic driving element mounted thereon to be directly driven from said motor, a gear train shaft within the gear train casing in substantial alignment with said motor shaft, a magnetic driven element mounted on the gear train shaft in operative position to receive torque from the magnetic driving element through said partition intervening between said shafts and elements, said gear train including all gearing in complete hermetic isolation from said meter casing, said partition being provided with bearing support for the gear train shaft and with an annular recess about said bearing support reducing the thickness of said partition to a minor fraction of its thickness elsewhere, the driven magnetic coupling element comprising a keeper mounted on said gear train shaft with an offset central portion spanning said bearing and pole portions located deep in said recess, the driving coupling element mounted on the motor shaft comprising a magnet of substantially circular outline and small radius with a transverse channel in its end face defining pole portions located in immediate proximity to said partition at the side thereof opposite said first mentioned recess.

4. In a meter, the combination with means providing a meter casing, a gear chamber and an intervening partition hermetically sealing said chamber from said casing, of a gear train within the gear chamber and having a driven shaft at one side of said partition, a liquid drive motor in the meter casing having a driving shaft at the other side of said partition in approximate alignment with the driven shaft, and magnetic driving and driven elements for transmitting motion between said shafts, one of said elements comprising a magnet and the other a keeper, the element on the driving shaft being exposed to liquid traversing the meter casing and comprising a small disk axially mounted on the driving shaft and substantially diametrically channeled on a face adjacent said partition whereby to provide facial poles contiguous to said partition.

5. In a water meter, the combination with a casing having inlet and outlet chambers and an intervening seat, of a motor casing on said seat having inlet and outlet ports communicating with said chambers, a rotor in the motor casing having a shaft projecting therefrom, a hermetically sealed gear casing constituting a closure for the meter casing and providing a partition toward which the rotor shaft projects, a magnet circular in a plane normal to said shaft and mounted at the upper end of the shaft, said magnet having a diametrical channel in a face adjacent said partition whereby to provide poles immediately contiguous to said partition, a gear train in said gear casing including a driven shaft terminating adjacent said partition in substantial alignment with the rotor shaft, and a keeper on the driven shaft provided with poles complementary to those of said magnet to receive motion from said magnet for the propulsion of said gear train from said rotor shaft, the circular form of said magnet being adapted to enable said magnet to break itself free of any ice forming in the water in said meter casing to which said magnet is exposed.

6. The combination with a water meter casing having inlet and outlet chambers and intervening apertured partition means, of a motor casing seated against the partition means and having ports communicating with the inlet and outlet chambers of the meter casing, bearing means in the motor casing, a rotor in the casing and including a driving shaft projecting therefrom, an annular flange extending upwardly from the motor casing enclosing said shaft and fitted to said meter casing, a closure for the meter casing engaging said flange and provided with means connecting it to the meter casing under pressure such as to hold the motor casing seated upon said partition, means beyond said closure exteriorly of said meter casing providing a gear train casing hermetically sealed from said meter casing, a gear train in the gear train casing having a driven shaft substantially aligned with the driving shaft of said rotor at opposite sides of said closure, a disk magnet of generally circular outline mounted coaxially upon the end of the driving shaft and having a diametrically channeled face in immediate proximity to the closure and enclosed by said flange whereby to be isolated from the general flow of water through said meter while exposed to water within said flange, and a keeper carried by the driven shaft of the gear train and provided with polar terminals immediately adjacent said magnet face at the other side of the closure whereby to receive motion therefrom through the intervening closure.

7. In a meter, the combination with casing means providing a motor chamber and a gear train chamber and an intervening partition hermetically precluding communication between said chambers, said partition being provided centrally with a bearing exposed to the gear train chamber and having an annular recess about said bearing reducing the thickness of the partition at said recess, of a rotor in the motor chamber having a shaft projecting toward the recessed position of the partition, a gear train in the gear train chamber having a driven shaft in said bearing, said shafts being substantially aligned, a magnet mounted directly on the rotor shaft and being of circular outline, said magnet being transversely channeled to provide poles projecting axially within said outline and in im-

mediate proximity to the recessed portion of the partition, a keeper mounted upon the driven shaft and provided with poles complementary to the poles of the magnet, the portion of the partition thinned at said recess comprising the only metal intervening between the poles of the magnet and the keeper, the diameter of the path traversed by said poles being very substantially smaller than the diameter of said rotor, whereby to permit of direct magnetic motion transmission between said shafts at full rotor speeds and without substantial loss.

8. In a meter, the combination with casing means providing a motor chamber and a gear chamber and an intervening partition, of a rotor in the motor chamber, a motor drive shaft upon which the rotor is mounted, said shaft projecting toward said partition, a gear train in the gear train chamber having a shaft projecting from said partition in substantial alignment with said motor shaft, and magnetic coupling elements mounted directly upon the respective shafts at opposite sides of the partition for high speed magnetic motion transmission from the motor shaft to the shaft of said gear train, one of said elements comprising a magnet having poles directed toward said partition and traversing a path not greatly exceeding one-fourth inch in radius, the other of said elements having complementary poles immediately adjacent said partition, and the linear movement of the poles of the magnet element respecting the material of said partition being so slight in proportion to the strength of the magnet element and the mass of the partition as to ensure a driving connection between said shafts without slip and without substantial loss of magnetism.

9. A water meter comprising the combination with a water motor having a motor shaft exposed to the water in the meter, a register gear train wholly outside of such water, and casing means providing an intervening partition between the motor shaft and gear train, of a magnetic drive comprising a keeper element connected with said gear train on the dry side of said partition, and a magnet element mounted in axial alignment with the keeper element on the motor shaft at the side of the partition exposed to water, said magnet element comprising a disk shaped member substantially circular in outline and provided at its end adjacent said partition with a substantially unbroken surface except where traversed by a single transverse groove defining separate pole portions of said member, said member being adapted by reason of its form as above defined to tend to free itself from ice freezing about it.

FRANK W. E. WEISSE.