(No Model.) 4 Sheets—Sheet 1.

L. SCHULTZ.

QUILTING MACHINE.

No. 456,736. Patented July 28, 1891.

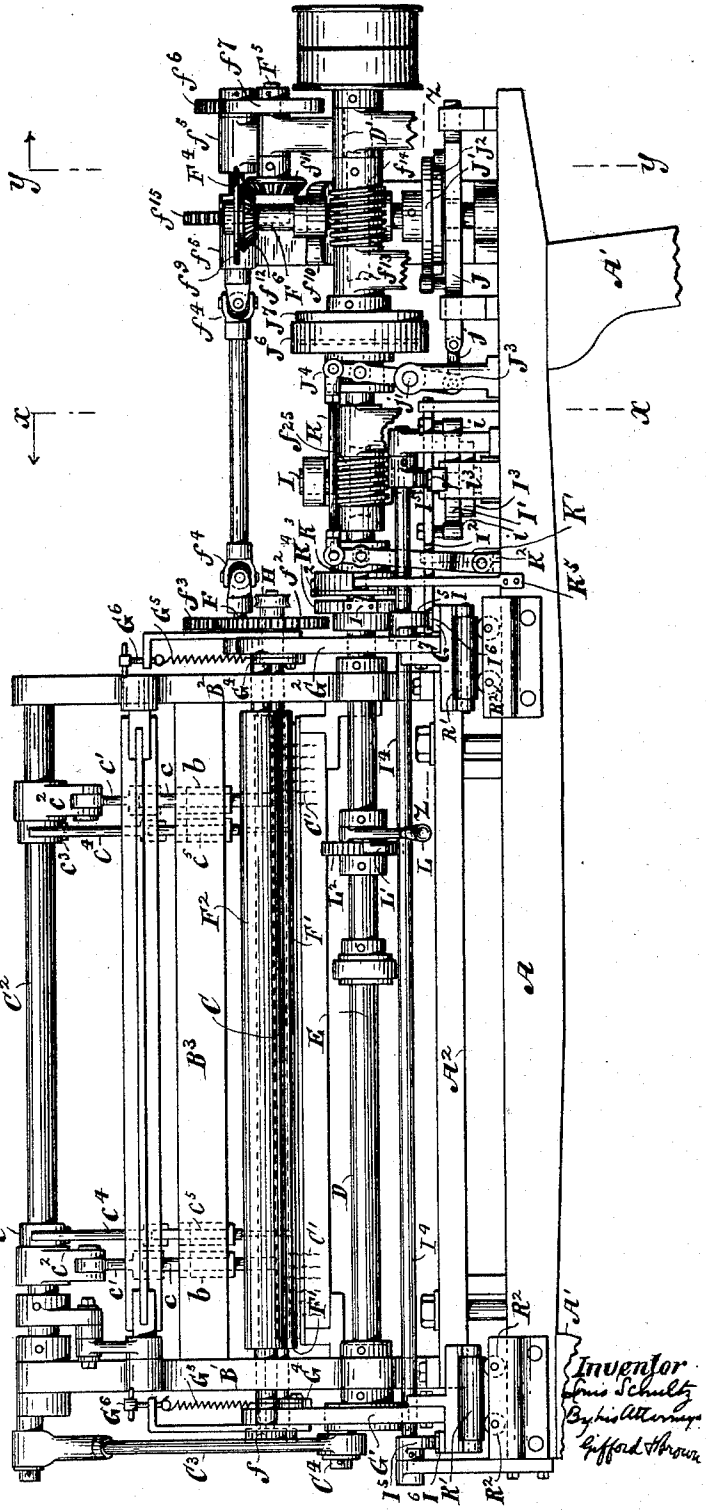

Fig. 1

Witnesses
C. R. Ferguson
Wm. M. Iliff

Inventor
Louis Schultz
By his Attorneys
Gifford & Brown

THE NORRIS PETERS CO., PHOTO-LITHO., WASHINGTON, D. C.

(No Model.) 4 Sheets—Sheet 2.

L. SCHULTZ.

QUILTING MACHINE.

No. 456,736. Patented July 28, 1891.

Fig. 2

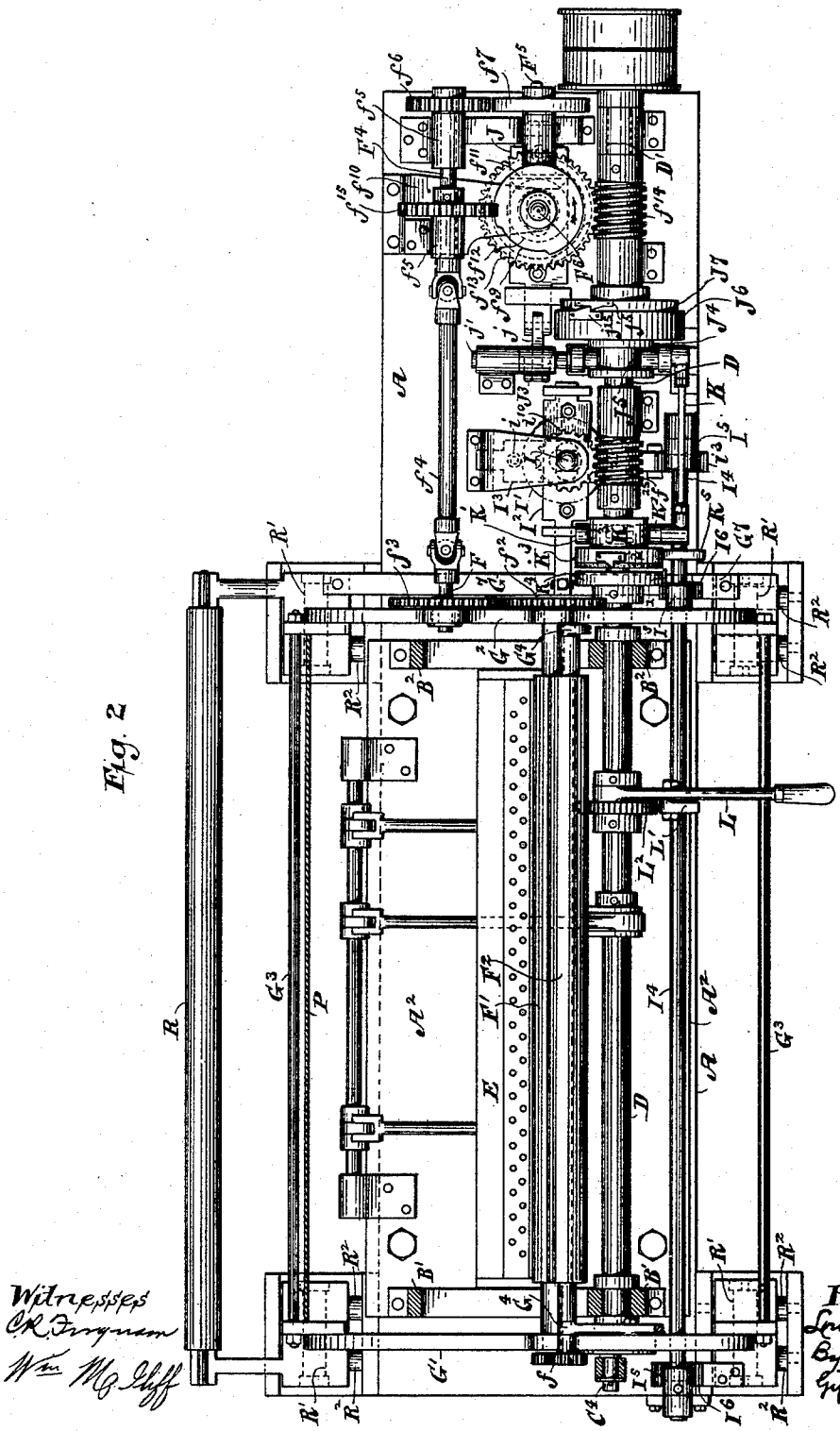

Witnesses
C. R. Ingram
Wm. McElff

Inventor
Louis Schultz
By his Attorneys
Gifford & Brown

THE NORRIS PETERS CO., PHOTO-LITHO., WASHINGTON, D. C.

(No Model.) 4 Sheets—Sheet 3.

L. SCHULTZ.

QUILTING MACHINE.

No. 456,736. Patented July 28, 1891.

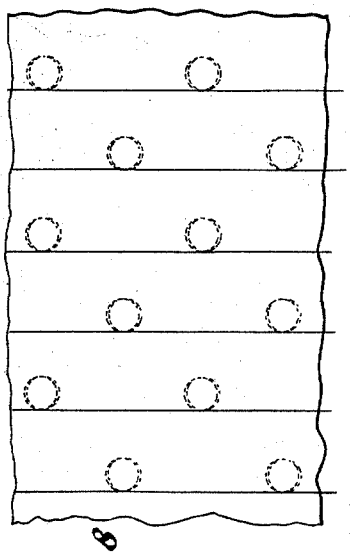

Fig. 8

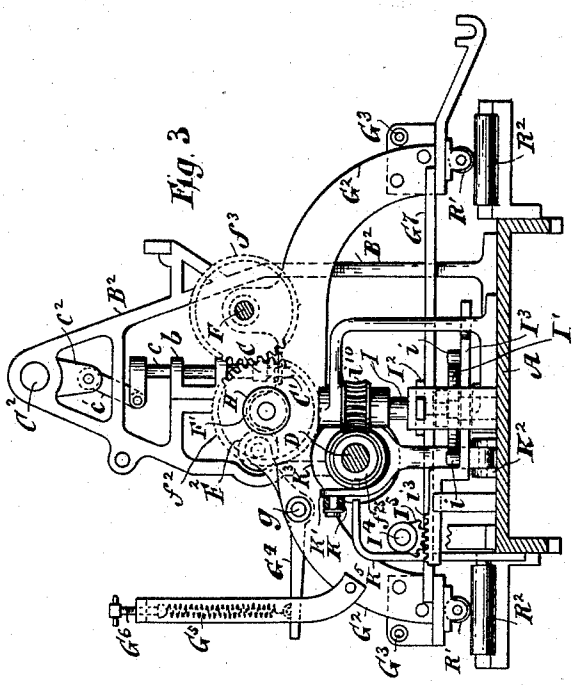

Fig. 3

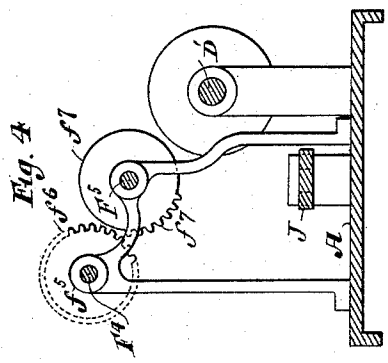

Fig. 4

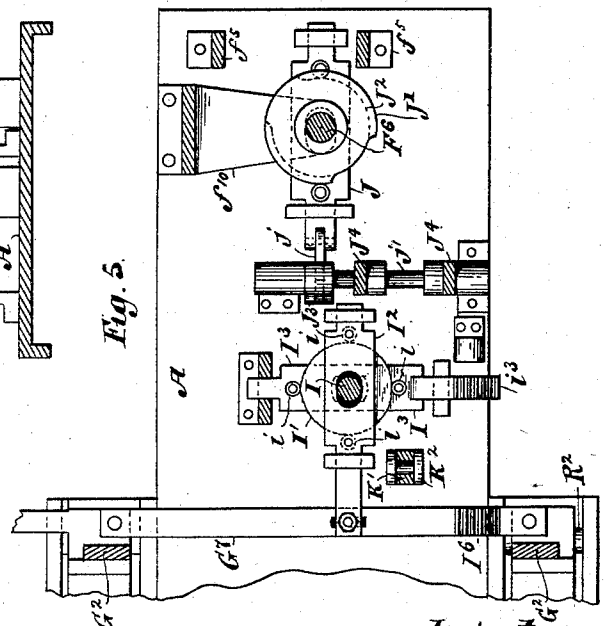

Fig. 5

Witnesses
C. R. Ingraham
Wm. M. Cliff

Inventor
Louis Schultz
By his Attorneys
Gifford & Brown

THE NORRIS PETERS CO., PHOTO-LITHO., WASHINGTON, D. C.

(No Model.) 4 Sheets—Sheet 4.

L. SCHULTZ.

QUILTING MACHINE.

No. 456,736. Patented July 28, 1891.

Fig. 6.

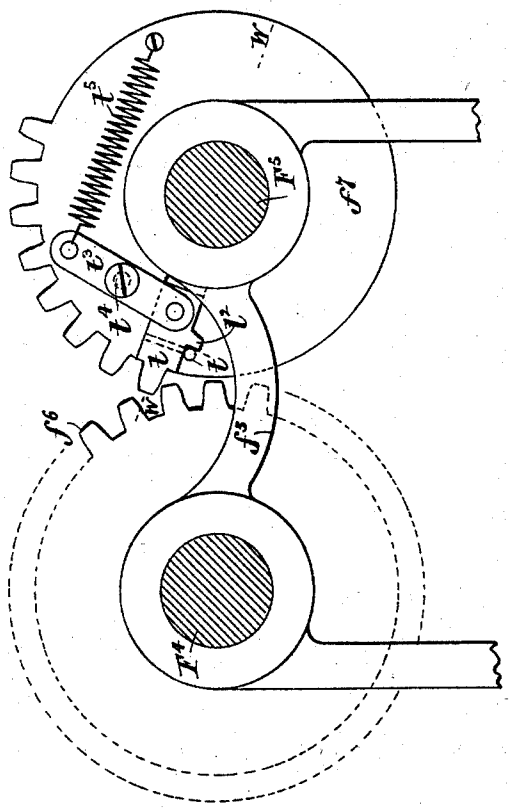

Fig. 7.

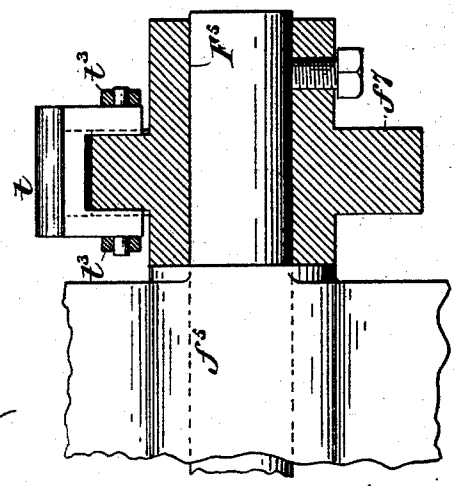

Witnesses
C. R. Ferguson
Wm. McCliff

Inventor
Louis Schultz
By his Attorneys
Gifford & Brown

THE MORRIS PETERS CO., PHOTO-LITHO., WASHINGTON, D. C.

UNITED STATES PATENT OFFICE.

LOUIS SCHULTZ, OF NEW YORK, N. Y., ASSIGNOR TO THE EXCELSIOR QUILTING COMPANY, OF SAME PLACE.

QUILTING-MACHINE.

SPECIFICATION forming part of Letters Patent No. 456,736, dated July 28, 1891.

Application filed October 11, 1889. Serial No. 326,671. (No model.)

To all whom it may concern:

Be it known that I, LOUIS SCHULTZ, of New York, in the county and State of New York, have invented a certain new and useful Improvement in Quilting-Machines, of which the following is a specification.

I will describe a quilting-machine embodying my improvement, and then point out the novel features in the claims.

In the accompanying drawings, Figure 1 is a back view of a machine embodying my improvement, certain parts being broken away to economize space. Fig. 2 is a plan or top view of the machine, certain parts being represented in section. Fig. 3 is a transverse vertical section taken at the plane of the dotted line *x x*, Fig. 1, and looking in the direction indicated by the arrow which is contiguous to such line. Fig. 4 is a transverse vertical section taken at the plane of the dotted line *y y*, and looking in the direction indicated by the arrow which is contiguous to such line. Fig. 5 is a horizontal section of a portion of the machine, taken at the plane of the dotted line *z z*, Fig. 1. Fig. 6 is a transverse vertical section corresponding generally to Fig. 4, but illustrating a modified construction. Fig. 7 is a section of the parts illustrated in Fig. 6, taken at the plane of the dotted line *w w*, Fig. 6. Fig. 8 is a face view of a piece of quilted fabric which may be worked in this machine.

Similar letters of reference designate corresponding parts in all the figures.

A designates the bed of the machine. As here shown, it is supported on legs A′. On the bed is mounted a table A^2, the latter being slightly elevated.

B′ B^2 designate two side frames secured in the present instance to the table A^2 by bolts or otherwise to occupy parallel positions. Between them extends a cross-bar or stretcher B^3. It is obvious that the table A^2 can be dispensed with if the side frames B′ B^2 are extended downwardly to connect with the bed A.

C designates the needle-bar. This has secured to it a series of needles C′, which, in the present instance, are arranged in two rows, so that the needles of the second row will be behind those of the first row and opposite the spaces between those of the first row. This arrangement of the needles may be understood by reference to Figs. 1 and 3, where some of the needles are represented, and it also may be understood by reference to the zigzag row of circles, which in Fig. 2 represent holes in the cover of the shuttle or loop chamber.

Secured to the needle-bar are a number of upright rods *c*, which work vertically within brackets *b*, attached to the front of the bar C, and are connected at the upper end by links *c′* with arms c^2, affixed to a rock-shaft C^2. On the rock-shaft are other arms c^3, and these are connected with rods c^4, secured to a presser-foot bar. The rock-shaft is oscillated by means of a rod C^3 deriving motion from a crank c^4, arranged upon a shaft D. It will be readily understood that the rock-shaft imparts a vertically-reciprocating motion to the needle-bar and needles. The needles in this machine have only an up-and-down movement.

In the machine is included shuttle mechanism, and E designates the race-bar therefor.

In the present example of the improvement the fabric to be quilted is fed lengthwise under the needles, and also moved laterally. Rollers F′ F^2 serve to move it longitudinally. These rollers are supported in a carriage G′ G^2 G^3. This carriage consists of two side frames G′ G^2 and rods G^3 securing them together. It is free to move in any direction in a horizontal plane. As shown, these side frames G′ G^2 have secured to them rollers R′, extending widthwise of the machine parallel with the needle-bar, and journaled in brackets fastened to the lower extremities of the side frames. Beneath these rollers R′ are pairs of rollers R^2, extending forwardly and backwardly of the machine and journaled in brackets secured to the bed A. The rollers R′ rest upon and are supported by the rollers R^2. It will readily be understood that the rollers R′ may roll upon the rollers R^2 in the direction of the axes of the latter, so as to enable the carriage to move backwardly and forwardly, and that the rollers R^2 can rotate under the rollers R′, to enable the carriage to move laterally, or, in other words, lengthwise of the needle-bar. The feed-roller F′ is

journaled in the side frames G′ G² of the carriage. The roller F² is journaled in levers G⁴, which are fulcrumed between their ends by pins or bolts *g* to the side frames G′ G² of the carriage. At the rear ends the levers G⁴ are connected to springs G⁵, attached to screws G⁶, engaging with upright bars fastened to the side frames of the carriage. These springs force the roller F² with greater or less pressure toward the roller F′.

The fabric to be quilted is at first rolled on a roller R, attached to the carriage. Thence it is drawn by the feed-rollers over an apron P, extending beneath the needles and attached to the carriage.

The feed-rollers F′ F² are geared together by gear-wheels *f*, affixed to their journals at one end. To the rollers F′ is affixed a gear-wheel f^2. The gear-wheel f^2 derives motion from a gear-wheel f^3, affixed to a shaft F, which is supported at one end in the side frame B² of the carriage.

The shaft F does not partake of the lateral movement of the carriage. Hence there must be a relative sliding movement between it and the carriage. Because of this the gear-wheel f^3 is to be secured to the shaft F by means of a spline or feather and connected to the bearing of the carriage receiving the shaft F, so that the gear-wheel will move with the carriage and have a sliding movement relatively to the shaft F. The shaft F is connected by a universal joint f^4 to a shaft F⁴. This shaft F⁴ is supported in bearings f^5, supported by the bed A of the machine.

Owing to the universal joint between the shafts F and F⁴, the carriage is able to move forwardly and backwardly. It is therefore possible for the carriage to move in any and all directions in a horizontal plane without interfering with the transmission of rotary motion to the feed-rollers. The shaft F⁴ has affixed to it a gear-wheel f^6, deriving motion periodically from a toothed segment f^7, affixed to a shaft F⁵. This shaft F⁵ is supported in one of the bearings f^5. On this shaft F⁵ is affixed a bevel gear-wheel f^{11}, which engages with a bevel gear-wheel f^{12}, affixed to an upright shaft F⁶, journaled in a bracket f^{10}, erected on the bed A. The shaft has affixed to it a worm-gear f^{13}, which derives motion from a worm f^{14}, affixed to the driving-shaft D′. The shaft F⁵, therefore, moves constantly with the driving-shaft. It transmits motion to the shaft F⁴ and thence to the feed-rollers periodically, owing to the fact that no motion is transmitted to the shaft F⁴ except when the toothed segment engages with the gear-wheel f^6. On the shaft F⁴ is affixed a lock-wheel f^{15}, coacting with a stop flange or disk f^9, affixed to the shaft F⁶. The stop flange or disk f^9 is circular in form, but has a notch or opening in its periphery. Except when this notch comes opposite the lock-wheel f^{15}, the stop flange or disk engages with the lock-wheel f^{15} and holds the latter against rotation. While the shaft F⁴, carrying this lock-wheel, is thus held against rotation the feed-rollers are precluded from rotating. One end of the notch or opening in the stop flange or disk comes opposite the lock-wheel f^{15} just before one end of the toothed segment f^7 enters into engagement with the gear-wheel f^6 on the shaft F⁴, and the notch or opening is not carried beyond the lock-wheel until after said toothed segment has gone out of engagement with the wheel f^6. It follows, therefore, that the stop flange or disk locks the shaft F⁴ and the feed-rollers at all times, except when the toothed segment f^7 engages with the wheel f^6 to rotate the shaft F⁴ and the feed-rollers. On one of the journals of the roller F′ may be affixed a pulley H to enable the roller to transmit rotary motion to a roller upon which the completed fabric will be taken up or wound.

Having now described the mechanism by which rotary motion is imparted to the feed-rollers and explained the motions imparted to the carriage, I will now describe the means which are here employed for producing the motions to the carriage.

I designates an upright shaft supported from the bed A and having affixed to it a cam I′. This cam operates in conjunction with two bars or plates I² I³, fitted to slide in bearings and provided with bowls or rollers *i*. The bar or plate I² is connected to a bar G⁷, secured to the carriage G′ G² G³ by means of a bolt engaging in a slot in said bar, and this bar or plate extends lengthwise of the machine. It will be obvious that the carriage will be moved laterally by the action of the cam I′ upon the bar or plate I². The bar or plate I³ is provided with a toothed rack i^3, which engages with a toothed segment I⁵, affixed to a shaft I⁴, journaled in bearings supported by the bed A. The shaft I⁴ has affixed to it two toothed segments I⁵, and these engage with toothed racks I⁶, secured to the carriage G′ G² G³. It will be obvious that whenever the cam I′ imparts a movement to the bar or plate I³, this motion will be transmitted to the carriage and will cause the carriage to move backward and forward.

The cam I′, it will be seen, serves to produce a movement of the carriage in two different directions, and these combined movements will result in a movement of the carriage in a circular or other sinuous path. By varying the cam the movement of the carriage will be varied. It will be seen that the cam is stepped and that the bars or plates I² I³ are longitudinally slotted to embrace the shaft I. The stepping of the cam is not, however, essential and the bars or plates may be made differently. The shaft I is shown as having affixed to it a gear-wheel i^{10}, which engages with a worm f^{25}, affixed to the shaft D.

I have now explained the motions of the feed-rollers and the movements of the carriage necessary for the production by each needle of a circle of stitching. I will now describe a mechanism whereby the operation of

the needles and shuttle will be temporarily suspended to enable the fabric to be fed a certain distance preparatory to the quilting upon it of another set of circles. This suspension of the function of the operation of the needles and shuttles is for the purpose of enabling the fabric to be fed the distance indicated by the full lines extending between the dotted circles in Fig. 9.

On the shaft F^6 are twin cams J' J^2. These operate in conjunction with bowls arranged upon a sliding plate J. This sliding plate J is connected by a link j with an arm J^3, affixed to a rock-shaft j', which is journaled in brackets or stands erected upon the bed A. The rock-shaft has affixed to it arms J^4, which are provided with bowls or rollers entering a circumferential groove in a sleeve J^5, which fits upon the shaft D. This sleeve is free to be moved lengthwise of the shaft D; but it is locked to rotate with the shaft D by means of a feather or spline. This sleeve has affixed to it one part of a clutch. In the present instance it is shown as having the female part J^6 secured to it. The other part J^7 of the clutch is secured to the shaft D'. The clutch may be of any suitable construction. In the present instance the female part consists of an internally-conical flange, and the male part is circumferentially conical to engage with said flange. The male part is shown as being provided with a projection j^5, arranged in such position that on the rotation of the driving-shaft D' after the engagement of the two parts of the clutch it will encounter the shoulder of a projection j^{15}, with which the female part is provided. The object of these projections is to insure the positive engagement of the driving-shaft D' with the shaft D. Lest the purpose of this clutch is not apparent, I will explain that whenever the parts of the clutch are disengaged the movement of the carriage in a circular path will be terminated and the operation of the needles and shuttles will be suspended. As the feed-rollers are, however, rotated through the driving-shaft D', that will continue rotating to feed the fabric. The feed then produced is the feed from the front to the back of the machine, which is indicated by the straight full lines in Fig. 8. It will be understood that the cams J' J^2 effect the disconnection of the shaft D from the driving-shaft D' once in every rotation of the upright shaft F^6, which carries the cams. To one of the arms J^4, which serves to effect the shifting of the female clutch J^6, is pivotally connected a rod K. The rod K is pivotally connected to the upper end of a lever K', which is fulcrumed at the lower end to a stand K^2, erected on the bed A. The upper end of this lever K' is forked to embrace the hub of a non-rotary disk K^3, fitted to slide lengthwise of the shaft D. The lever K' may connect with the hub of the disk K^3 by means of pins extending from the lever into cavities or recesses in the hub of the disk. The disk K^3 has in its periphery a recess, into which extends the end of a rod K^5, whereby the disk will be prevented from rotating. The recess is sufficiently long in the direction of the axis of the shaft D to allow of the necessary sliding movement of the disk axially of said shaft.

It will be seen that whenever the arms J^4 move the female part of the clutch away from the male part the disk K^3 will be correspondingly shifted toward a disk K^4, which is affixed to the shaft D to rotate with it. The disk K^3 on the side next the disk K^4 is preferably faced with leather, as its purpose is to act as a brake or stop for the shaft D. On the disks K^3 K^4 are shouldered projections 1 2, similar to the projections j^5 j^{15}, heretofore described. They will prevent any slipping of the disk K^4 relatively to the non-rotary disk K^3 after the disk K^4 has in rotating assumed a certain relation to the disk K^3, but it is intended that the brake K^3 shall previously thereto have gradually arrested the rotary movement of the disk K^4 and shaft D.

The driving-shaft D', it will be noticed, is provided with fast and loose pulleys. On the shaft D is loosely mounted an arm L, carrying a pawl L', which operates in conjunction with a ratchet-wheel L^2, affixed to said shaft D. By oscillating the arm L' the shaft D may be rotated by hand to adjust it in any desired position.

As shown in Figs. 6 and 7, the toothed segment f^7, from which the intermittent rotary motions of the feed-rollers are derived, has that one of its teeth t which enters the gear-wheel f^6 made capable of yielding, so that if it should not enter properly it would be free to yield and move gradually into proper position without suffering injury. This tooth t is provided with a bifurcated shank embracing the body or disk of the segment f^7 and extending radially thereon. The two arms of this bifurcated shank preferably fit in grooves formed radially in the body or disk of the segment f^7. This tooth is capable of moving in a radial direction inwardly and outwardly. Its outward movement is limited by a stop-pin t', which is secured to the body or disk of the segment f^7, and extends in the path of a projection t^2, with which one of the arms of the bifurcated shank of tooth t is provided. A lever t^3, fulcrumed between the ends by a pin or screw t^4 to the body or disk of the segment f^7, is at one end pivotally connected with the shank of the tooth t, and at the other end is connected with a spring t^5. The spring t^5, acting through the lever, tends to force the tooth t outward. The tooth t may, however, move inward against the resistance of the spring. Preferably there will be a lever t^3 and spring t^5 on each side of the body or disk of the segment f^7, and combined with each one of the bifurcated arms of the shank of the tooth t.

I have other applications for Letters Patent, Serial Nos. 327,096 and 327,451, showing some combinations of parts which are herein represented and not herein claimed. I there-

fore reserve the right to claim in the other applications the novel features not herein claimed.

In an application, Serial No. 312,601, filed May 29, 1889, I have shown, described, and claimed feed-rollers supported by a carriage and operated so as to remain stationary during the movement of the carriage and to rotate while the carriage is at rest; and I have also shown, described, and claimed in said application the specific mechanism for imparting the requisite movements to the carriage and feed-rollers. Such parts are shown and described, but not broadly claimed, in this application.

What I claim as my invention, and desire to secure by Letters Patent, is—

1. In a sewing-machine, the combination of a carriage for moving material to be stitched in a circular or similar path, bars or plates arranged at an angle to each other and connected with the carriage, a cam operating with said plates for imparting the said movement to the carriage, a rotary shaft mounted on a stationary part of the machine and carrying said cam, and feed-rollers operating to move material when the carriage is at rest, substantially as specified.

2. In a sewing-machine, the combination of a carriage for moving material to be stitched in a circular or similar path, a cam I′, bars or plates I^2 I^3, a shaft oscillated by the bar or plate I^3, and arms on the said shaft imparting motion to the carriage, substantially as specified.

3. In a sewing-machine, the combination of a carriage for moving material to be stitched in a circular or similar path, a cam I′, bars or plates I^2 I^3, a rack i^3 on the bar or plate I^3, a shaft I^4, having a toothed wheel or segment engaging with the rack i^3, toothed wheels or segments I^5 on the shaft I^4, and racks I^6 on the carriage, substantially as specified.

4. In a sewing-machine, the combination, with sewing mechanism, of a carriage, a cam I′ imparting motion to the carriage and deriving motion from the bar or plate I^3, the bar or plate I^2 being directly connected to the carriage, a bar or plate I^2, actuated by the cam to impart motion to the carriage in one direction, a bar or plate I^3, also actuated by the cam, and a rotary shaft for imparting motion to the carriage in the other direction, substantially as specified.

5. In a sewing-machine, the combination, with a series of needles, of a carriage movable in a circular or a similar path, feed-rollers journaled in the carriage, a horizontal shaft imparting motion to the feed-rollers, and a rotary segment, provided with a yielding tooth, for driving this shaft, substantially as specified.

6. In a sewing-machine, the combination, with a series of needles, of a carriage movable in a circular or a similar path, feed-rollers journaled in the carriage, a horizontal shaft imparting motion to the feed-rollers, a rotary segment provided with a radially-yielding tooth, and a spring impelling the tooth outwardly, substantially as specified.

LOUIS SCHULTZ.

Witnesses:
C. R. FERGUSON,
WM. M. ILIFF.