Aug. 28, 1951 A. LEVIN 2,565,612

WRITING TELEGRAPH SYSTEM

Filed June 1, 1948 5 Sheets-Sheet 1

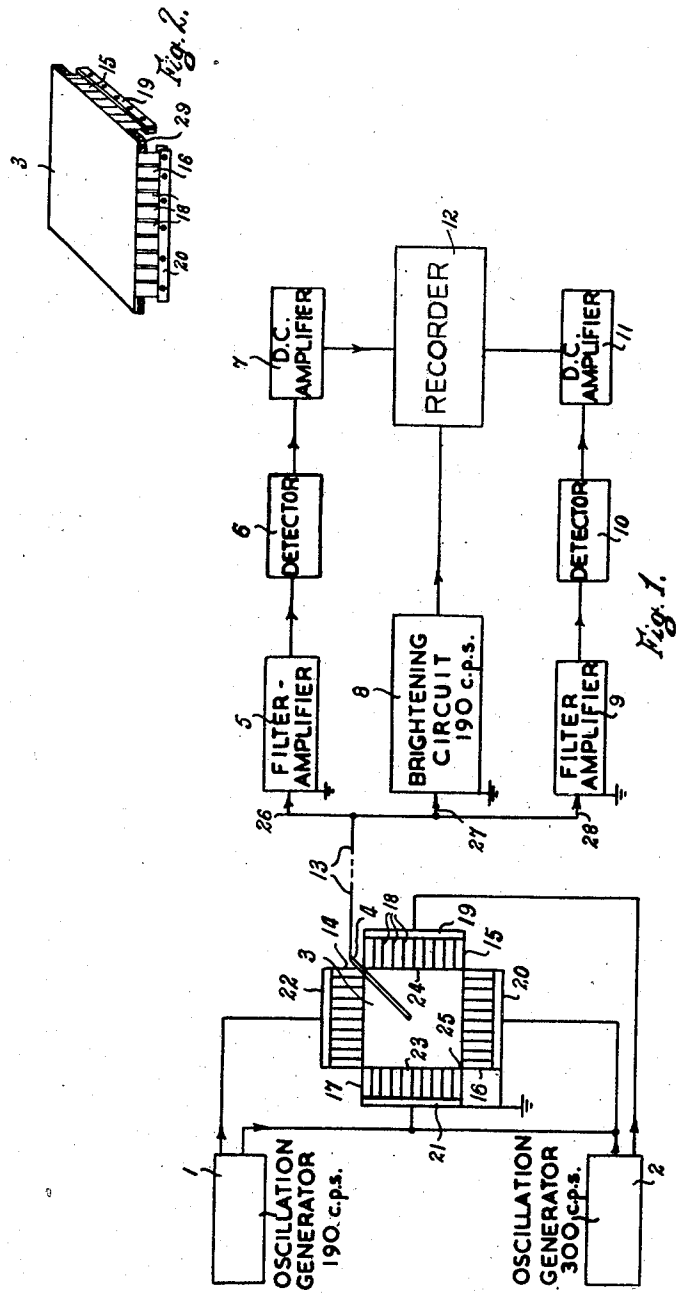

Fig. 1.

Fig. 2.

INVENTOR
ARTHUR LEVIN
By Ralph B. Stewart
Attorney

WRITING TELEGRAPH SYSTEM

Filed June 1, 1948 5 Sheets-Sheet 2

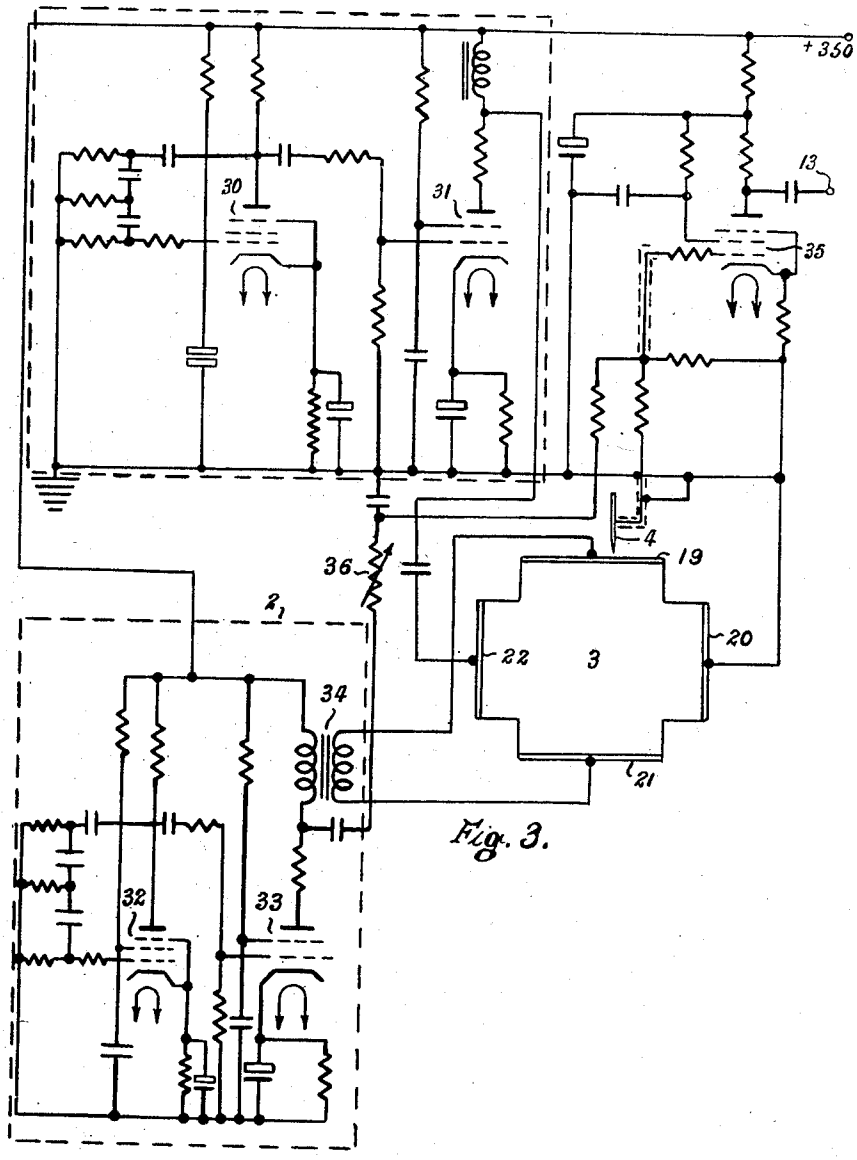

Fig. 3.

INVENTOR
ARTHUR LEVIN
By Ralph B. Stewart
Attorney

Aug. 28, 1951 A. LEVIN 2,565,612

WRITING TELEGRAPH SYSTEM

Filed June 1, 1948 5 Sheets-Sheet 3

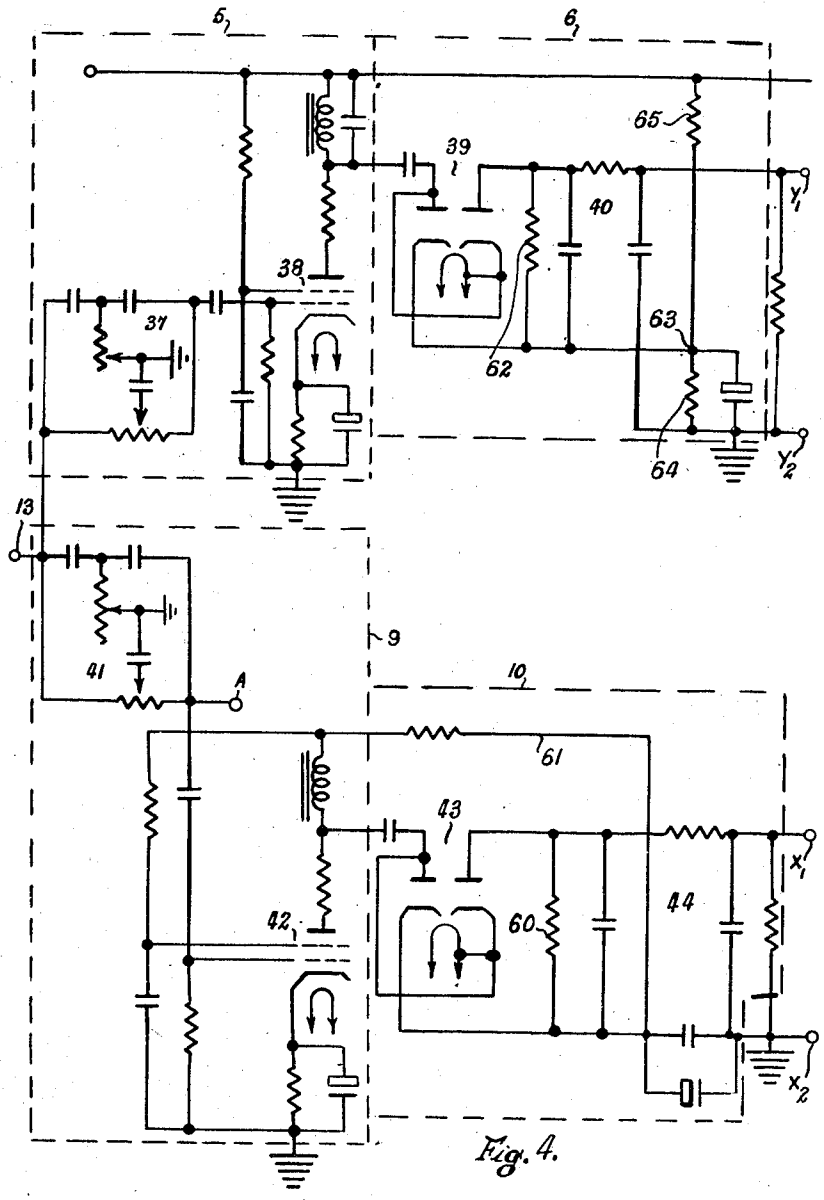

Fig. 4.

INVENTOR
ARTHUR LEVIN
By Ralph B. Stewart
Attorney

Aug. 28, 1951 A. LEVIN 2,565,612

WRITING TELEGRAPH SYSTEM

Filed June 1, 1948 5 Sheets-Sheet 4

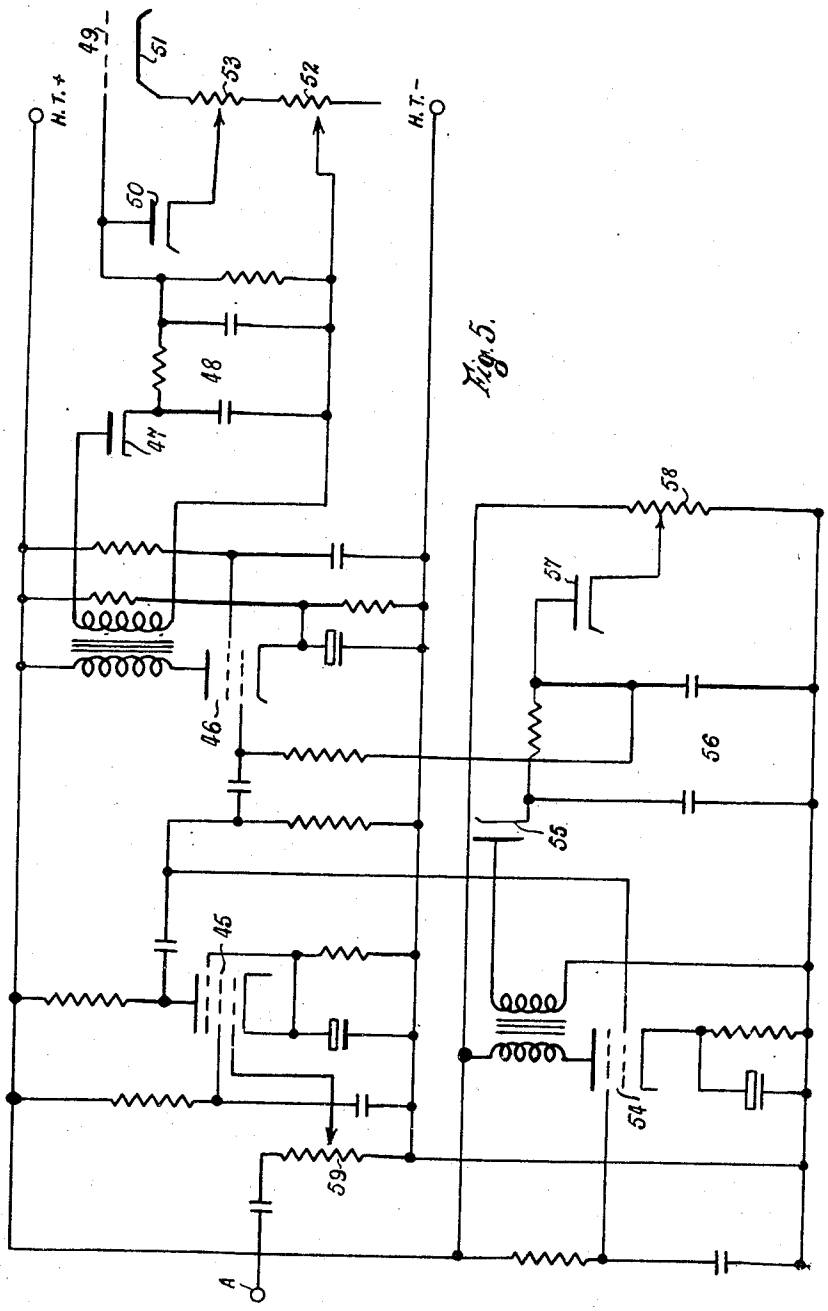

Fig. 5.

INVENTOR
ARTHUR LEVIN
By Ralph B. Stewart
Attorney

WRITING TELEGRAPH SYSTEM

Filed June 1, 1948

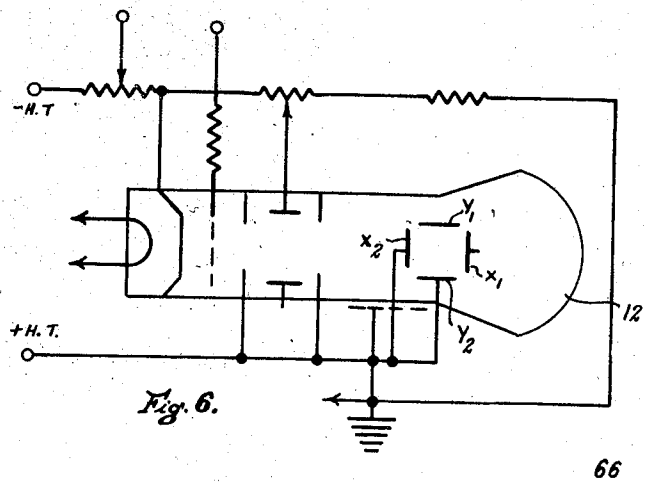

Fig. 6.

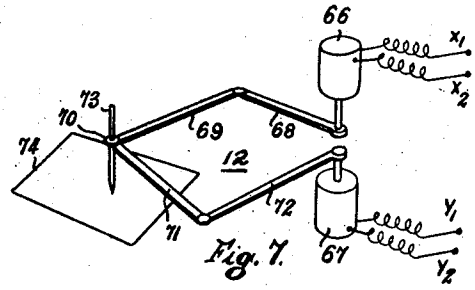

Fig. 7.

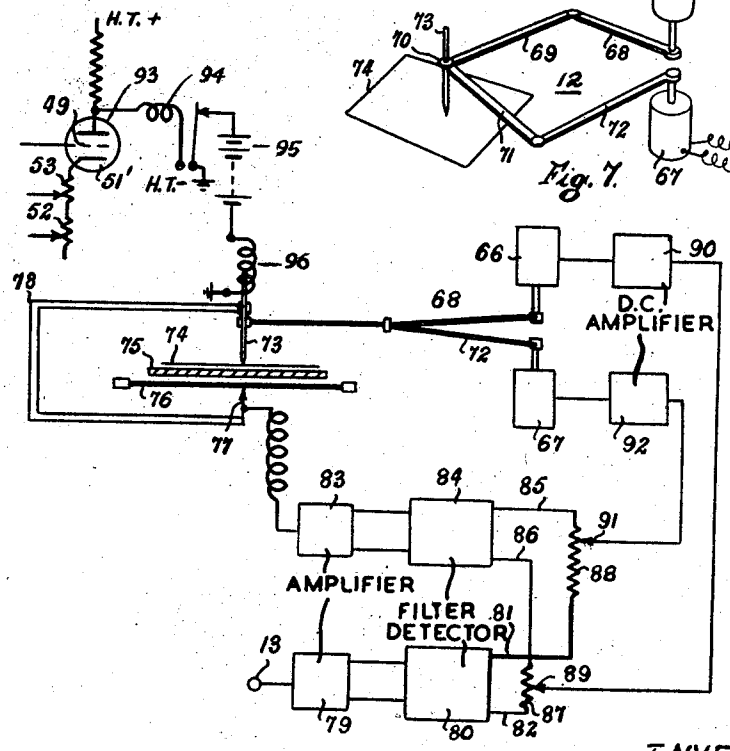

Fig. 8.

INVENTOR
ARTHUR LEVIN
By Ralph B. Stewart
Attorney

Patented Aug. 28, 1951

2,565,612

UNITED STATES PATENT OFFICE

2,565,612

WRITING TELEGRAPH SYSTEM

Arthur Levin, London, England, assignor to Cossor Radar Limited, London, England, a company of Great Britain

Application June 1, 1948, Serial No. 30,290
In Great Britain May 30, 1947

4 Claims. (Cl. 178—19)

(Granted under the provisions of sec. 14, act of March 2, 1927; 357 O. G. 5)

1

This invention relates to an electric writing telegraph system of a kind whereby the movements of a pencil or stylus at a transmitting position are reproduced and/or recorded simultaneously with their occurrence at a receiving position.

The invention may be employed in an electric writing telegraph system of the kind specified comprising, at a transmitter, a writing tablet of electrically resistive material over a surface of which the pencil or stylus can be moved, means for applying to the tablet an electrical oscillation to establish a potential gradient in one direction across the tablet, means for applying to the tablet an electrical oscillation of a different frequency from the first-named oscillation to establish a potential gradient across the tablet in a second direction inclined to the first direction and means for transmitting voltages at the two said frequencies derived from the pencil or stylus, or voltages representative of variations in the amplitudes of these frequencies, the relative ampliture of the said two transmitted frequencies defining the position of the pencil or stylus. The said two directions are preferably mutually perpendicular. The writing tablet is preferably of rectangular shape and has electrically connected thereto along each of its edges an extension of resistive material which extends away from the said edge, the outer edges of the extensions being provided with strip-shaped terminals of relatively highly conducting material and one of the said oscillations being applied between each pair of opposite terminals.

A co-operating receiver according to the invention comprises an arrangement for utilising the two voltages whose amplitudes represent two co-ordinates of position respectively to reproduce visibly, photographically, or otherwise, a trace corresponding to that followed by the said pencil or stylus. The reproduction may for example be by means of a cathode ray tube or a mechanical device comprising a reproducing pencil or stylus whose movements are made to correspond with those of the pencil or stylus at the transmitter.

The invention will be described by way of example with reference to the accompanying drawings in which:

Figure 1 is a diagrammatic representation of a system according to the invention,

Figure 2 shows in perspective one form that the writing tablet in Figure 1 may take,

Figure 3 is a circuit diagram of the transmitter portion of Figure 1,

Figures 4 and 5 are circuit diagrams of different parts of the receiver portion of Figure 1,

2

Figure 6 is a circuit diagram of a cathode ray tube which may be used in combination with the circuits of Figs. 4 and 5 to provide one form of recorder,

Figure 7 illustrates diagrammatically a modification of a part of Figure 1, and

Figure 8 illustrates diagrammatically another form of recorder, which may be used with the circuits of Figures 4 and 5.

Referring to Figure 1, a writing tablet 3 is of rectangular, in this example of square, shape and is formed of a suitable resistive material, such for example as a nickel-iron alloy. Integral with the tablet are four rectangular extensions 14, 15, 16 and 17 which extend from the four edges of the tablet respectively. The extensions are divided into tongues or strips 18 and the tongues of each extension are connected together at their outer ends by strip-shaped terminals 19, 20, 21 and 22 of relatively highly conducting material, such as copper. The terminals 20 and 21 are, in this example, connected together, to earth and to a common terminal of two oscillation generators 1 and 2. The other terminal of the generator 1 is connected to the strip terminal 22 and the other terminal of the generator 2 is connected to the strip terminal 19.

The two generators 1 and 2 are arranged to generate oscillations of different frequencies which will be assumed to be 190 and 300 cycles per second. The frequencies may have any other convenient different values provided that they are high enough for the maximum rate of writing upon the tablet 3.

The result of the application of the oscillatory potential differences is to establish potential gradients in the tablet 3 in two mutually perpendicular directions. The oscillations at 190 C. P. S. produce a potential gradient between strip terminals 22 and 20 and those at 300 C. P. S. produce a potential gradient between strip terminals 19 and 21. The amplitude of the potential variations relative to earth at 300 C. P. S. in a direction from left to right will be a minimum at the left hand edge 23 of the tablet 3 and will increase to a maximum at the right hand edge 24 of the tablet. Similarly, the amplitude of the potential variations relative to earth at 190 C. P. S. in a direction up and down in Figure 1 will increase from a minimum at the lower edge of the tablet to a maximum at the upper edge of the tablet. Thus the position of any point upon the tablet is defined by the amplitudes of the two oscillations at such a point.

The subdivision of the extensions 14, 15, 16, 17 into tongues 18 is desirable since it substantially

prevents flow of current from the strip terminals 19, 20, 21 and 22 into the tablet in any direction but along the lengths of the tongues. The subdivision is, however, not essential.

The extensions 14, 15, 16 and 17 of resistive material are required in order to prevent short-circuiting of the tablet along its edges. Thus if a strip terminal were connected directly to the edge 23 it would present a short-circuit to current flow between terminals 20 and 22 along that edge.

One convenient constructional form of the tablet 3 is shown in Figure 2. In this case the tablet 3 of resistive material is carried upon an insulating support 29 and the extensions subdivided into tongues 18 are bent downward at right angles to the surface of the tablet.

A writing pencil or stylus 4 is of conducting material and its tip can be brought into contact with the surface of the tablet and moved in any desired manner over that surface. The voltage picked up by the stylus 4, relative to earth, will be compounded of two oscillations of the frequencies 190 and 300 C. P. S. of amplitudes representative of the position of the stylus. This voltage is transmitted along a line 13 to a receiver. It will be evident that a radio channel may be used instead of the line 13.

The signal received at a receiver is passed into three channels 26, 27 and 28. Channel 26 contains a network 5 for selecting from the composite received signal oscillations of a band of frequencies centred on 300 C. P. S. and for amplifying the voltage from this network. The output from the network 5 is rectified in a rectifier 6, the unidirectional voltage so obtained is further amplified in a D. C. amplifier 7 and applied to the Y plates of a cathode ray tube 12. The channel 28 contains a chain 9, 10 and 11 coresponding to the chain 5, 6 and 7, but selective of the frequency 190 C. P. S. and the output of the D. C. amplifier 11 is applied to the X plates of the tube 12.

Since the voltage applied to the Y plates is dependent upon the amplitude of the 300 C. P. S. oscillation and hence to the position of the stylus 4 in an up and down direction in the tablet 3 and since the voltage applied to the X plates is dependent upon the position of the stylus in a direction from right to left on the tablet 3, it can be arranged that the position of the spot produced by the cathode ray beam on the screen of the tube 12 will correspond to the position of the stylus 4 on the tablet 3, provided that the degree of amplification of the signal is suitably chosen and provided that the X and Y plates are so biased that in the absence of a signal the spot occupies a suitable position on the screen. Movements of the stylus whilst in contact with the tablet 3 will be reproduced by corresponding movements of the spot on the tube screen. If this screen is arranged to have a relatively long afterglow, the track produced upon the screen will remain visible for a convenient length of time for observation. Alternatively the image built up on the screen may be photographed and a short afterglow will then suffice.

The biasing of the X and Y plates is such that the voltage applied to these plates by the signal when the stylus is at the bottom left-hand corner of the tablet 3 positions the spot on the screen of the tube 12 at the bottom left hand corner of the area of the screen on which reproduction is to take place.

It is desirable that the spot on the screen of the tube 12 should be blacked out until signalling commences when it should be brightened automatically. A further desirable feature is that when the stylus 4 is brought into contact with the surface of the tablet 3 at some point away from the position of rest of the spot, the track followed by the spot, from the position of rest to the said spot should not be visible, that is to say the spot should remain blacked out for a time long enough for the spot to reach any point on the tablet from its position of rest. On the other hand it is desirable that when the stylus is lifted from the tablet, the spot should be blacked out quickly in order to avoid producing a visible track between the last point of contact of the stylus and the position of rest of the spot. Finally, it is desirable that the brightness of the spot should remain substantially constant at all points on the screen of the tube 12. These features are met by a brightening circuit 8 in the channel 27 which controls the intensity of the spot automatically in accordance with the amplitude of the oscillation of one of the component frequencies of the signal, in the present example that of 190 C. P. S., the circuit 8 being, therefore, made such as to select a frequency band centred on 190 C. P. S.

The various circuits will now be described in more detail. Referring first to Figure 3, the generators 1 and 2 of Figure 1 are indicated within broken line rectangles of the same references. The generator 1 comprises an oscillator valve 30 with its associated frequency selective circuit elements which need not be described in detail since they are of well-known type. The oscillations at 190 C. P. S. generated by the valve 30 are amplified by a valve 31 and applied to the terminal 22 of the tablet 3, the terminal 20 being earthed.

The generator 2 comprises an oscillator valve 32 and an amplifier valve 33 and the amplified oscillations from the latter valve are applied through a transformer 34 between terminals 19 and 21. It is to be noted that Figure 3 differs from Figure 1 in the detail that in Figure 3, in effect, so far as the up and down direction and the oscillations of the frequency 190 C. P. S. are concerned, the earthed point of the tablet 3 is the centre point thereof.

Voltage picked up by the stylus 4 is applied to an amplifying valve 35 and thence to an output terminal 13.

In order to compensate for the fact that it is the centre point of the tablet 3 which is effectively at earth potential whereas it is desired that the datum point should be the left-hand bottom corner of the tablet 3, there is mixed with the voltage applied to the grid of the valve 35 a component of voltage at 300 C. P. S. and of suitable amplitude and phase. This component is derived from the anode circuit of the valve 33 and is fed to the valve 35 through a variable resistor 36 whereby slight adjustment of the amplitude and/or phase of the voltage component can be effected.

Figure 4 shows within broken line rectangles 5, 6, 9 and 10 the correspondingly numbered parts in Figure 1, the D. C. amplifiers 7 and 11 of Figure 1 being omitted.

The circuit 5 comprises a network 37 rejecting frequencies around 190 C. P. S. and accepting those around 300 C. P. S. and an amplifying valve 38. The circuit 6 comprises a voltage-doubling diode rectifier 39 and a smoothing circuit 40. The output of this circuit is connected to terminals marked Y_1 and Y_2.

The circuit 9 comprises a network 41 rejecting frequencies around 300 C. P. S. and passing

frequencies around 190 C. P. S. and a valve amplifier **42**. The circuit **10** comprises a voltage-doubling diode rectifier **43** followed by a smoothing circuit **44**, the output of which is connected to terminals marked X_1 and X_2.

The terminals X_1, X_2, Y_1, Y_2 are connected respectively to the correspondingly numbered terminals in Figure 6 and thus to the deflecting plates of the cathode ray tube **12**. It is to be noted that a D. C. bias is applied to the plate X_1 through the line **61** and resistor **60** and that a D. C. bias is applied to the plate Y_1 from a tapping at the junction of resistors **64** and **65** and through resistor **62**. This bias serves to deflect the spot off the screen of the cathode ray tube when no signals are being received.

The brightening circuit **8** of Figure 1 is shown in Figure 5. The lower frequency component oscillations of the received signal are derived from the terminal A in Figure 4 and are applied to the correspondingly-numbered terminal in Figure 5. It is to be noted that the arrangement of Figure 5 differs from that of Figure 1 in that the selection of the lower frequency component is effected in the circuit **9** of Figures 1 and 4 thus avoiding the need for a separate selecting network in the brightening circuit of Figure 5.

The purpose of the circuit of Figure 5 is to apply to the cathode ray tube **12** (Figures 1 and 6) a voltage serving to brighten the spot on the screen when there is received a signal containing a component at 190 C. P. S. above a predetermined amplitude level; to maintain the brightness substantially constant whatever the value of the amplitude of this component may be within working limits and above the predetermined level; to introduce a delay in the brightening to permit of the movement of the spot to any part of the screen before brightening occurs; and nevertheless to cause the spot to be blacked out quickly when the component of 190 C. P. S. falls below the predetermined amplitude level.

The voltage at 190 C. P. S. from terminal A is applied to two amplifying valves **45** and **46** in cascade, a rectifier **47** and a circuit **48** of relatively short time constant to the grid **49** of the cathode ray tube. The control grid of the valve **45** is negatively biased relatively to the cathode and voltage applied at A has to overcome this bias in order that a voltage may be passed to the valve **46**. In this way it can be arranged that the brightening circuit does not become operative until the amplitude of the 190 C. P. S. oscillation received corresponds to a position upon the tablet **3** itself. The value of the lower limiting amplitude for operation of the brightening circuit can be adjusted by means of a potential divider **59**. The rectifier **47** and circuit **48** supply a D. C. bias to the grid **49** when a voltage at 190 C. P. S. and of appreciable amplitude is received and this brightens the spot. The brightness is prevented from increasing above a suitable value by a limiter **50** connected between the grid **49** and cathode **51** of the tube. The level of brightness can be adjusted by means of a potential divider **52** and the level of limiting by a potential divider **53**.

The anode circuit of the valve **45** is also connected to a valve **54** the output of which is rectified by a rectifier **55** and applied to a circuit **56** of relatively long time constant and a unidirectional voltage from this circuit is applied as positive bias to the control grid of the valve **46** which valve is biased to anode current cut-off in the absence of a voltage from the circuit **56**. The voltage from the circuit **56** is prevented from exceeding a desired value by a limiter **57** and this value is adjustable by means of a potential divider **58**.

When a voltage at 190 C. P. S. sufficient to overcome the bias of the valve **45** reaches this valve no effect upon the bias of the cathode ray tube grid **49** results initially because the valve **46** is cut off. After a time determined by the circuit **56**, however, a positive bias is applied to the grid of the valve **46**, whereupon voltage from the valve **45** applied to the valve **46** is amplified and a positive brightening voltage is applied to the grid **49** of the cathode ray tube.

When the stylus **4** at the transmitter is lifted from the tablet, the signal transmission ceases and the positive bias on the grid **49** quickly falls owing to the short time constant of the circuit **48**.

Referring again to the transmitter, it may be desirable that a record should be kept of what is written upon the tablet **3**. For this purpose a sheet of electrically conducting paper may be placed on the tablet. The paper may be rendered conducting in any convenient way: for instance, it may be electrolytic paper of the kind used in telewriter recording when the track of a stylus is recorded by current passed through paper containing a material which is caused to change colour on the passage of current therethrough. The record may be made by means of such change of colour or a lead pencil may be used as stylus.

When the end of the stylus nearer the tablet can be made sufficiently large, use may be made of the capacity between the stylus end and the tablet in order to pick up voltage from the tablet. The oscillations are then preferably of suitably higher frequency. In this case the upper surface of the tablet may be permanently coated with a thin insulating layer of insulation of the stylus from the surface of the tablet may be effected by the use of a sheet of ordinary paper or other insulating material laid upon the tablet surface and serving to provide a record. The relatively large end of the stylus may be provided with a pencil lead projecting slightly to mark the paper or other material.

The wire **13** in Figure 1 may, as already stated, be replaced by a radio frequency transmission system and modulation may be in amplitude or frequency. A preferred method is to separate the two frequency components derived from the stylus **4**, rectify each of these components and use each rectified voltage to frequency-modulate a carrier of a different frequency. The frequency modulation is then in accordance with the variations in amplitude of the voltages picked up from the tablet and hence with the position of the stylus. At the receiver the two carrier frequencies are separated by suitable tuned circuits and demodulated and the circuits, such as **37** and **41** in Figure 4, for selecting the component frequencies are unnecessary.

An alternative to the cathode ray tube at the receiver is shown diagrammatically in Figure 7. Voltages at terminals X_1, X_2, Y_1 and Y_2 in Figure 4, after further amplification if necessary, are applied to correspondingly referenced terminals in Figure 7 to energise two motors **66** and **67**. Each of these motors may be of the kind used in a moving-coil voltmeter designed to handle the necessary power. The motor **66** has its shaft connected to a link **68** the free end of which is hinged to a second link **69**. The link **69** is hinged

at 70 to one end of a link 71 which is hinged at its other end to one end of a link 72 the other end of which is fixed to the shaft of the motor 67. A recording stylus 73 is fixed upon the hinge axis at 70 and rests upon material 74, such as paper, on which a record is to be made.

The position of the stylus 73 will then be dependent upon the voltages applied to the motors 66 and 67. This arrangement has the disadvantage that the relation between the voltage applied to the motors and the resulting movement of the stylus 73 is not readily made linear.

A modification of Figure 7 in which this and other objections to the arrangement of Figure 7 may be overcome is shown diagrammatically in Figure 8. Beneath a table 75 supporting the recording paper 74 is a resistive plate 76 of the same construction as that shown at 3, 14, 15, 16, 17, 19, 20, 21 and 22 in Figure 1. Means such as the generators 1 and 2 in Figure 1, not shown in Figure 8, are provided to maintain potential gradients at two different frequencies in mutually perpendicular directions across the plate, as described in connection with Figure 1. The frequencies used need not be the same as at the transmitter. A stylus 77 rests upon the under side of the plate 76 and is rigidly connected by a member 78 to the stylus 73 so that movements of the two styli 73 and 77 are identical.

Received signals are applied at terminal 13 to an amplifier 79 and passed to a filter-detector 80 where the frequencies of 190 and 300 C. P. S. are separated and separately rectified to provide outputs at 81 and 82 respectively. Voltage from the stylus 77 is applied to an amplifier 83 and thence to a filter-detector 84 by which the two frequencies employed to energise the plate 76 are separated and rectified to provide separate outputs at 85 and 86. The terminals 82 and 86 are connected through a resistor 87 and the terminals 81 and 85 are connected through a resistor 88.

When the position of the stylus 77 (and hence that of the stylus 73) corresponds with that at the transmitter, the voltages at 85 and 86 will be exactly equal to those at 81 and 82 respectively and there will be no potential difference across either resistor 87 or 88. When there is any difference between the positions of the transmitting and receiving styli, a potential difference will occur across one or both of the resistors 87 and 88, this difference corresponding to the difference in positions. An adjustable tapping 89 is provided on the resistor 87 connected to a D. C. amplifier 90 and thence to the motor 66. An adjustable tapping 91 on the resistor 88 is connected to a D. C. amplifier 92 and thence to the motor 67. These motors therefore move to correct the error in position of the receiving stylus 73.

The brightening circuit of Figure 5 may be employed with the arrangement of Figure 8 as follows: The grid 49 and cathode 51 of the cathode ray tube in Figure 5 are replaced by the grid and cathode 49' and 51' of a valve 93 having its anode connected to a relay 94. When a positive voltage appears on the grid 49' the rise in anode current actuates the relay 94 and breaks a circuit including a battery 95 and a solenoid 96. The solenoid serves to hold the stylus 73 clear of the surface 74 until the relay 94 is actuated.

If preferred a third frequency may be combined with the two employed to define the position of the stylus on the tablet, this third frequency being generated when the stylus 4 is lifted (or lowered) and serving to raise (or lower) the stylus 73.

It will be evident that many variations can be made in the arrangements described within the scope of the invention as defined by the claims.

I claim:

1. In an electric writing telegraph system, a receiver comprising means for receiving two signals representative respectively of two coordinates of the position of a transmitting stylus at a transmitter, means for deriving from said signals two voltages whose magnitudes are dependent, respectively, upon said coordinates, a cathode ray tube having a recording screen and a beam control electrode, means for applying said voltages, respectively, to deflect the beam of said tube in two mutually perpendicular coordinates, a circuit including said control electrode of said tube for maintaining the beam of said tube normally cut off in the absence of said signals, and control means responsive to one of said signals exceeding a predetermined amplitude to overcome said control electrode cut off bias for establishing said beam in contact with said screen, said control means including an amplifier normally biased below cut off, a circuit of relatively short time constant between said amplifier and said control electrode to permit a relatively rapid restoration of said amplifier cut-off bias when one of said signals falls below said predetermined amplitude, a circuit of relatively long time constant, means for applying a portion of said signal to said long time constant circuit, means for deriving a bias voltage from said long time constant circuit and means for applying said last mentioned bias voltage to said amplifier to overcome said normal cut-off bias thus rendering said amplifier operative after one of said signals has exceeded said predetermined value.

2. A system according to claim 1 wherein said movable recording element comprises a stylus with means normally maintaining said stylus out of contact with said surface, and said control means comprises means energized by said amplifier to effect movement of said stylus into contact with said surface.

3. A system according to claim 1 wherein said movable recording element is the electron beam of a cathode ray tube and said means said means normally maintaining said recording element out of contact with said recording surface comprises a grid element of said tube normally biased to cut off the beam.

4. In an electric writing telegraph system, a receiver comprising means for receiving two signals representative respectively of two co-ordinates of the position of a transmitting stylus at a transmitter, means for deriving from said signals respectively two voltages whose magnitudes are dependent upon said co-ordinates respectively, a recorder having a recording surface and a movable recording element, means for applying said voltages respectively to deflect said recording element in two mutually perpendicular coordinates, means normally maintaining said recording element out of contact with said recording surface in the absence of said signals, and control means responsive to one of said signals exceeding a predetermined amplitude for establishing contact between said recording element and the recording surface, said control means including an amplifier normally biased below cut-off, a circuit of relatively short time constant between said amplifier and said recording element to permit restoration of said amplifier cut off bias when one of said signals falls below said predetermined amplitude, a circuit of relatively long time constant, means for applying a

portion of said signal to the last-named circuit, means for deriving a bias voltage from said last-named circuit, and means for applying said last mentioned bias voltage to said amplifier to overcome said normal cut off bias thus rendering said amplifier operative after said one of said signals has exceeded said predetermined value.

ARTHUR LEVIN.

REFERENCES CITED

The following references are of record in the file of this patent:

UNITED STATES PATENTS

Number	Name	Date
2,186,252	Little	Jan. 9, 1940
2,241,544	Dreyer	May 13, 1941
2,274,638	Rosene	Mar. 3, 1942
2,338,949	Kupfmuller	Jan. 11, 1944
2,415,718	Wilson	Feb. 11, 1947

FOREIGN PATENTS

Number	Country	Date
460,033	Great Britain	Jan. 19, 1937