D. A. HOPKINS.

DEVICE FOR LINING JOURNAL-BOXES.

No. 193,818. Patented Aug. 7, 1877.

Fig: 1

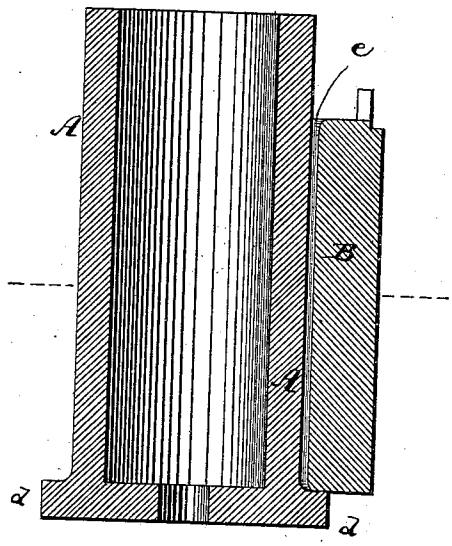

Fig: 2

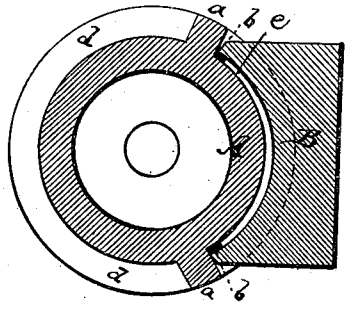

Witnesses:
A. V. Briesen
Ernest G. Webb

Inventor:
David A. Hopkins
by his attorney
A. V. Briesen

N. PETERS, PHOTO-LITHOGRAPHER, WASHINGTON, D. C.

UNITED STATES PATENT OFFICE.

DAVID A. HOPKINS, OF PARK RIDGE, NEW JERSEY.

IMPROVEMENT IN DEVICES FOR LINING JOURNAL-BOXES.

Specification forming part of Letters Patent No. **193,818**, dated August 7, 1877; application filed June 28, 1877.

To all whom it may concern:

Be it known that I, DAVID A. HOPKINS, of Park Ridge, in the county of Bergen and State of New Jersey, have invented a new and Improved Device for Lining Journal-Boxes, of which the following is a specification:

Figure 1 is a longitudinal central section of my improved device for lining journal-boxes. Fig. 2 is a transverse section of the same.

Similar letters of reference indicate corresponding parts in all the figures.

This invention relates to a new construction of mandrel for a mold used as a means of lining the concave faces of journal-boxes with lead or other comparatively soft metal.

The invention consists in providing a mandrel with two projecting ribs, and between these ribs with parallel ledges or shoulders for the support of the journal-boxes, all as hereinafter described.

The letter A represents an upright mandrel made of metal of cylindrical or equivalent shape, with a projecting shoulder or collar, *d*, at its lower end. From this collar *d* project parallel with the axis of the mandrel two ribs, *a a*, which are made part of the mandrel, as clearly shown in Fig. 2. Each rib *a* has at one side an adjoining ledge or projection, *b*, which extends the full length of the rib, the two said ledges being between the two ribs *a*, as shown in Fig. 2.

The journal-box B to be lined is placed upon the shoulder *d*, between the two ribs *a*, and against the ledges *b*. These ledges project from the side of the mandrel sufficiently far to raise the journal-box the required distance from the mandrel, and to leave an intermediate space, *e*, for the reception of the metal with which the box is to be lined.

If it were not for the ledges *b* the position of the box would not be invariably alike, as one side of the box might bear directly against the body of the mandrel, while the other side would be raised away from the same.

By having the ledges *b* adjoining the ribs *a* it is impossible to place the box against the mandrel otherwise than in the correct position, and I attach much importance to their use.

The metal with which the box is to be lined is poured into the space *e* from above until it fills said space entirely. The journal, properly lined, is then removed, and another placed against the mandrel in manner stated.

I claim as my invention—

The mandrel A, provided with the shoulder or collar *d*, with the parallel ribs *a a*, and intermediate ledges *b*, substantially as and for the purpose herein shown and described.

DAVID A. HOPKINS.

Witnesses:

F. v. BRIESEN,

GEO. A. JAQUES.