(12) STANDARD PATENT (11) Application No. **AU 2007324818 B2**
(19) AUSTRALIAN PATENT OFFICE

(54) Title
Pressurized can, such as an aerosol can

(51) International Patent Classification(s)
B65D 83/38 (2006.01) *B65D 79/00* (2006.01)

(21) Application No: **2007324818** (22) Date of Filing: **2007.11.29**

(87) WIPO No: **WO08/064920**

(30) Priority Data

(31) Number	(32) Date	(33) Country
06024708.7	**2006.11.29**	**EP**

(43) Publication Date: **2008.06.05**
(44) Accepted Journal Date: **2013.10.24**

(71) Applicant(s)
Impress Group B.V.

(72) Inventor(s)
Niec, Philippe Gerard Stanislas

(74) Agent / Attorney
Shelston IP, L 21 60 Margaret St, Sydney, NSW, 2000

(56) Related Art
US 2004/0035871
GB 1572031
us6220073
US 4177746
US4151927
GB1572031

(12) INTERNATIONAL APPLICATION PUBLISHED UNDER THE PATENT COOPERATION TREATY (PCT)

(19) World Intellectual Property Organization
International Bureau

(43) International Publication Date
5 June 2008 (05.06.2008)

PCT

(10) International Publication Number
WO 2008/064920 A1

(51) International Patent Classification:
B65D 83/38 (2006.01) *B65D 79/00* (2006.01)

(21) International Application Number:
PCT/EP2007/010731

(22) International Filing Date:
29 November 2007 (29.11.2007)

(25) Filing Language: English

(26) Publication Language: English

(30) Priority Data:
06024708.7 29 November 2006 (29.11.2006) EP

(71) Applicant *(for all designated States except US)*: **IMPRESS GROUP B.V.** [NL/NL]; Zutphenseweg 51051, NL-7418 AH Deventer (NL).

(72) Inventor; and

(75) Inventor/Applicant *(for US only)*: **NIEC, Philippe, Gérard, Stanislas** [FR/FR]; 11, avenue Joël Le Theule, F-72300 Sablé-sur-Sarthe (FR).

(74) Agent: **PRINS, Hendrik, Willem**; Arnold & Siedsma, Sweelinckplein 1, NL-2517 GK The Hague (NL).

(81) Designated States *(unless otherwise indicated, for every kind of national protection available)*: AE, AG, AL, AM, AT, AU, AZ, BA, BB, BG, BH, BR, BW, BY, BZ, CA, CH, CN, CO, CR, CU, CZ, DE, DK, DM, DO, DZ, EC, EE, EG, ES, FI, GB, GD, GE, GH, GM, GT, HN, HR, HU, ID, IL, IN, IS, JP, KE, KG, KM, KN, KP, KR, KZ, LA, LC, LK, LR, LS, LT, LU, LY, MA, MD, ME, MG, MK, MN, MW, MX, MY, MZ, NA, NG, NI, NO, NZ, OM, PG, PH, PL, PT, RO, RS, RU, SC, SD, SE, SG, SK, SL, SM, SV, SY, TJ, TM, TN, TR, TT, TZ, UA, UG, US, UZ, VC, VN, ZA, ZM, ZW.

(84) Designated States *(unless otherwise indicated, for every kind of regional protection available)*: ARIPO (BW, GH, GM, KE, LS, MW, MZ, NA, SD, SL, SZ, TZ, UG, ZM, ZW), Eurasian (AM, AZ, BY, KG, KZ, MD, RU, TJ, TM), European (AT, BE, BG, CH, CY, CZ, DE, DK, EE, ES, FI, FR, GB, GR, HU, IE, IS, IT, LT, LU, LV, MC, MT, NL, PL, PT, RO, SE, SI, SK, TR), OAPI (BF, BJ, CF, CG, CI, CM, GA, GN, GQ, GW, ML, MR, NE, SN, TD, TG).

Published:
— *with international search report*

(54) Title: PRESSURIZED CAN, SUCH AS AN AEROSOL CAN

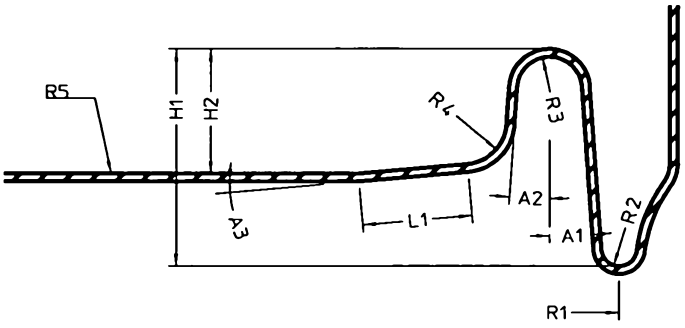

(57) Abstract: The invention relates to a pressurized can, such as an aerosol can, having a bottom comprising a panel connected via a countersink and a foot to the can body wall, which bottom has a panel with a substantially non-concave form.

WO 2008/064920 A1

2007324818 23 Sep 2013

PRESSURIZED CAN, SUCH AS AN AEROSOL CAN

FIELD OF THE INVENTION

[0001] The present invention relates to a pressurized can, such as an aerosol can.

BACKGROUND TO THE INVENTION

[0002] Any discussion of the prior art throughout the specification should in no way be considered as an admission that such prior art is widely known or forms part of common general knowledge in the field.

[0003] A pressurized can is generally made of one piece and comprises a bottom, a can body wall and an open end for filling and emptying. Pressure is used for emptying the content, such as liquid, gas, foam, paste and the like. The pressurized can has a bottom which comprises a central panel connected via a countersink and a foot to the can body wall.

[0004] Known pressurized cans, such as aerosol cans are characterized by the presence of a central panel which has a concave shape.

[0005] Generally pressurized cans have a diameter in the range of about 20-80mm, preferably within the range of 30-70mm. Exemplified are diameters of 30mm, 45mm and 60mm.

SUMMARY OF THE INVENTION

[0006] It is an object of the present invention to overcome or ameliorate at least one of the disadvantages of the prior art, or to provide a useful alternative.

[0007] Accordingly, the invention provides a pressurized can, having a bottom comprising a panel connected via a countersink and a foot to the can body wall, said panel having a substantially non-concave form, wherein:

- the foot wall angle A1 is in the range of about -10° to 45°;
- the panel wall angle A2 is in the range of about 0° to 45°;

2007324818 23 Sep 2013

- the foot radius R2 is less than about 5 mm;
- the countersink radius R3 is less than about 5 mm;
- the panel radius R4 is larger than about 0.5 mm;
- the unit depth H1 is in the range of about 2 - 20 mm;
- the panel depth H2 is in the range of about 1 - 15 mm;
- the center panel radius R5 is in the range of 30 – 100 mm; and
- a bottom thickness in the range of about 0.3 - 0.7 mm.

[0008] Unless the context clearly requires otherwise, throughout the description and the claims, the words "comprise", "comprising", and the like are to be construed in an inclusive sense as opposed to an exclusive or exhaustive sense; that is to say, in the sense of "including, but not limited to".

[0009] Preferably, the pressurized can is an aerosol can.

[0010] Preferably, the foot wall angle A1 is selected such in order to advantageously provide a vertical structural element required for the pressure resistance. As from -10° sufficient pressure resistance is obtained. Whereas above 45° resistance to pressure decreases such that it requires a larger bottom wall thickness. Advantageously a foot wall angle A1 of 0° is ideal for providing a maximum strength. However, additional tooling steps are preferable in order to reach this vertical position or positions closed to the vertical position. For best economy in relation to material consumption and for one step forming it is preferred that the foot wall angle A1 is within the range of 2-35°.

[0011] Preferably the panel wall angle A2 is within the range of 2-35° for similar arguments as given in relation to the foot wall angle A1.

[0012] A minimum R2 is always required. A smaller foot radius R2 is beneficial to the strength. Preferably the foot radius R2 is within the range of about 0.5- 1.5mm. At a lower radius tooling is minimum.

[0013] Advantageously a lower countersink radius is good for strength. Preferably the countersink radius is within the range of about 0.5-1.5mm for similar reasons as given above for the foot radius R3.

2007324818 23 Sep 2013

[0014] The panel radius R4 provides a smooth connection between the central bottom panel and the countersink which is large enough for formation by proper tooling. Preferably the panel radius R4 is in the range of 1.0-1.5mm which is optimal for production and pressure performance.

[0015] Preferably the unit depth H1 and panel depth H2 are generally within the range of 1.5mm and preferably within the range of 2-10mm providing an optimal form for the countersink.

[0016] According to a preferred embodiment the panel outer ring slope A3 is within the range of 0-35°. At a slope of 0° the central panel is substantially flat. At a larger outer ring slope A3 there is a smooth connection towards the countersink. At low outer ring slope A3 there is a postponement of pleat appearance. Within the preferred range of 2-20° the panel outer ring slope A3 provides normal curves.

[0017] According to another preferred embodiment the panel outer ring width L1 is within the range of about 0-15mm and preferably within the range of 1-5mm thereby providing normal or optimal protection against the forming of wrinkles.

[0018] According to a preferred embodiment the central panel radius R5 is larger than about 20mm. The larger the central panel radius the more flat the central portion will become in a transition from convex to substantially flat. The central panel radius R5 is advantageously within the range of 30-100mm in order to resist pressure and avoid to go beyond the elastic limits.

[0019] According to another preferred embodiment the foot outer radius R13 is less than about 5mm and preferably within the range of 0.5-1.5 mm thereby providing a good or optimal connection with the body wall.

[0020] According to another preferred embodiment the foot height H11 is within the range of about 1-7mm, preferably within the range of 2.5mm thereby providing an optimal or a further improved strength. The pressurized can according to the invention has a diameter which is within the range of generally 20-80mm preferably within the practical ranges of 30-70mm. The bottom thickness may be within the range of 0.2-

2007324818 23 Sep 2013

0.7mm and still withstanding internal pressures of up to 15bar preferably up to 18bar. More preferably the thickness of the bottom of the pressurized can is within the range of 0.3-0.6mm dependent on the diameter.

[0021] The pressurized can according to the invention is generally made of metal. Preferably the metal used is steel or aluminium. In the case of aluminium it is preferred to use aluminium from the 3000 series, such as aluminium 3104.

[0022] Advantageously, the present invention at least in a preferred form provides a pressurized can which is provided with a bottom that can withstand internal pressure and still has a bottom wall thickness which is thinner than conventional pressurized cans, while still providing volume expansion.

[0023] Advantageously, at least in a preferred form the present invention provides a pressurized can which is designed for high pressure resistance (such as up to 15bar, and preferably up to 18bar) and still has a minimum thickness in the range of for instance 0.2-0.7mm, and generally within the range of 0.3-0.6mm, dependent on the diameter of the can. Such a pressurized can may be suitable for use as an aerosol can. The can according to the invention preferably has a pressure behaviour which combines the ability to withstand pressures without permanent deformation, and elastic deformability to a given volume. Up to a particular pressure the bottom may deflect to a certain extent and ultimately will form buckles. In relation to the elastic deformability it is preferable, that for up to about 15bars of pressure, deformations should not be visible. However, the pressurized can should be deformable up to a given volume under pressure. Accordingly, it is possible to have an indication of the presence of pressure (and the absence of pressure leak).

[0024] Accordingly, it is possible with a can according to the invention that the significant elastic deformation against pressure allows inspection of the cans during different stages of handling, such as closure processing and storage. Such outward inspection may be carried out with classical detector systems measuring particular distances to a sensor, such as a proximity sensor, laser sensor, induction sensor and ultrasonic sensor. This advantageously provides the opportunity to inspect the cans for either too low or too high internal pressures. For instance at closure for monitoring

2007324818 23 Sep 2013

the pressurization process and/or after processing the cans for detection of pressure loss due to leakage or pressurizing due to chemical reactions.

[0025] A can according to the invention should preferably have an optimal axial load resistance. Such axial load resistance provide a narrow footing with an increase of the vertical load. Accordingly, there is less deformability against axial load.

BRIEF DESCRIPTION OF THE DRAWINGS

[0026] A preferred embodiment of the invention will now be described, by way of example only, with reference to the accompanying drawings in which:

[0027] Figure 1 is a cross section of a part of the bottom of a pressurized can according to the invention;

[0028] Figure 2 is a detail from figure 1 in relation to the foot of the pressurized can according to the invention; and

[0029] Figures 3-5 are other profiles of bottoms for a pressurized can.

DETAILED DESCRIPTION OF PREFERRED EMBODIMENTS

[0030] Figure 1 shows a part of the bottom of a pressurized can according to the invention. The pressurized can has a cylindrical form of which the body can wall is substantially vertical and connected to a preferably necked opening for filling and emptying the content for the pressurized can.

[0031] In the given example the bottom has the following dimensions:

A1 foot wall angle 1°

A2 panel wall angle 1°

A3 panel outer ring slope 0°

L1 panel outer ring width 0 mm

R2 foot radius 1 mm

2007324818 23 Sep 2013

R3 countersink radius 1 mm

R4 panel radius 1 mm

R5 centre panel radius 40mm.

[0032] The bottom has a thickness of 0.4mm and was made of aluminium 3140.

[0033] The can had a foot radius R1 of 17.5mm. The diameter of the pressurized can according to the invention was 45mm.

[0034] At a unit depth H1 of 10.0 to 10.4mm and at a panel depth H2 of 4.0 to 4.4mm the pressurized can could withstand a pressure up to about 19bars prior to the formation of buckles.

[0035] The figures 3, 4 and 5 show other profiles for a bottom of a pressurized can.

[0036] For aerosol cans having a diameter of 30mm, 45mm and 60mm the main parameters for the bottom shown in figure 3 are as follows:

Main parameters

Parameter	Range	Preferred range	Importance
Ø	20 – 45	35 – 40	High
H2	3 – 25	5 – 15	High
R2	0.5 – 3	0.7 – 2	High
R4	0.5 – 3	0.7 – 2	High
R5	15 – 100	25 – 50	Minor
R6	0.5 – 10	0.7 – 5	Minor
H1	2 – 20	4 – 10	Minor

2007324818 23 Sep 2013

[0037] In relation to the bottom profiles shown in figure 4 the following main parameters are relevant:

Main parameters

Parameter	Range	Preferred range	Importance
Ø	20 – 45	35 – 40	High
H2	3 – 25	5 – 15	High
R2	0.5 – 3	0.7 – 2	High
R4	0.5 – 3	0.7 – 2	High
A1	0 - 30°	0 - 15°	High
R5	15 – 100	25 – 50	Minor
R6	0.5 – 10	0.7 – 5	Minor
H1	2 – 20	4 – 10	Minor

[0038] Finally, the main parameters of the bottom profile shown in figure 5 are as follows:

Main parameters

Parameter	Range	Preferred range	Importance
H2	3 – 25	5 – 15	High
R2	0.5 – 3	0.7 – 2	High
R4	0.5 – 3	0.7 – 2	High
A1	0 - 30°	0 - 15°	High
R5	15 – 100	25 – 50	Minor
R6	0.5 – 10	0.7 – 5	Minor

[0039] Although the invention has been described with reference to specific examples it will be appreciated by those skilled in the art that the invention may be embodied in many other forms.

2007324818 04 Oct 2013

CLAIMS

1. A pressurized can, having a bottom comprising a panel connected via a countersink and a foot to the can body wall, ~~siad~~said panel having a substantially non-concave form, wherein:

- the foot wall angle A1 is in the range of about -10° to 45°;
- the panel wall angle A2 is in the range of about 0° to 45°;
- the foot radius R2 is less than about 5 mm;
- the countersink radius R3 is less than about 5 mm;
- the panel radius R4 is larger than about 0.5 mm;
- the unit depth H1 is in the range of about 2 - 20 mm;
- the panel depth H2 is in the range of about 1 - 15 mm;
- the center panel radius R5 is in the range of 30 – 100 mm; and
- a bottom thickness in the range of about 0.3 - 0.7 mm.

2. A pressurized can according to claim 1, wherein the pressurized can is an aerosol can.

3. A pressurized can according to claim 1 or 2, wherein the foot wall angle A1 is in the range of 0° - 45°.

4. A pressurized can according to any one of claims 1 to 3, wherein the foot wall angle A1 is within the range of 2° - 35°.

5. A pressurized can according to any one of claims 1 to 4 wherein the panel wall angle A2 is in the range of about 2° - 35°.

6. A pressurized can according to any one of claims 1 - 5, wherein the foot radius R2 is in the range of about 0.5 - 1.5 mm.

7. A pressurized can according to any one of claims 1 - 6, wherein the countersink radius R3 is in the range of about 0.5 - 1.5 mm.

2007324818 23 Sep 2013

8. A pressurized can according to any one of claims 1 - 7, wherein the panel radius R4 is in the range of about 1.0 - 1.5 mm.

9. A pressurized can according to any one of claims 1 - 8, wherein the unit depth H1 is in the range of 5 - 15 mm.

10. A pressurized can according to any one of claims 1 - 9, wherein the panel depth H2 is in the range of 2 - 10 mm.

11. A pressurized can according to any one of claims 1 - 10, wherein the panel outer ring slope A3 is within the range of 2° - 20°.

12. A pressurized can according to any one of claims 1 - 11, wherein the panel outer ring width L1 is within the range of 1 - 5 mm

13. A pressurized can according to claim 1 - 12, wherein the foot outer radius R13 is within the range of 0.5 - 1.5 mm.

14. A pressurized can according to claim 1 - 13, wherein the foot height H11 is in the range of about 1 - 7 mm.

15. A pressurized can according to any one of claims 1 - 14 having a diameter in the range of about 20 - 80 mm and the bottom thickness is within the range of 0.3 - 0.6 mm.

16. A pressurized can according to any one of claims 1 - 15, having a pressure resistance of up to about 15 bar.

17. A pressurized can according to any one of claims 1 - 16, having a pressure resistance of up to about 18 bar.

18. A pressurized can according to any one of claims 1 - 17, made of steel.

19. A pressurized can according to any one of claims 1 - 18, made of aluminium.

2007324818 23 Sep 2013

20. A pressurized can according to any one of claims 1 - 19, made of aluminium of the 3000 series.

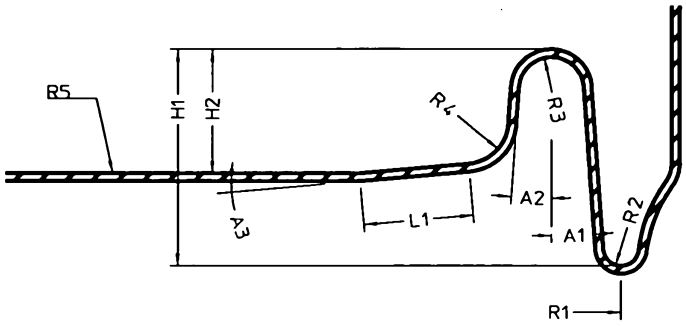

Figure 1

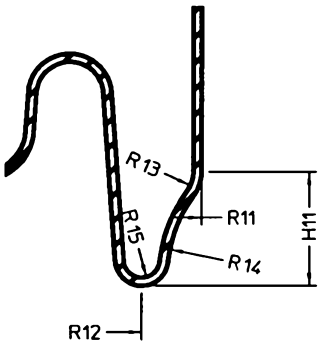

Figure 2

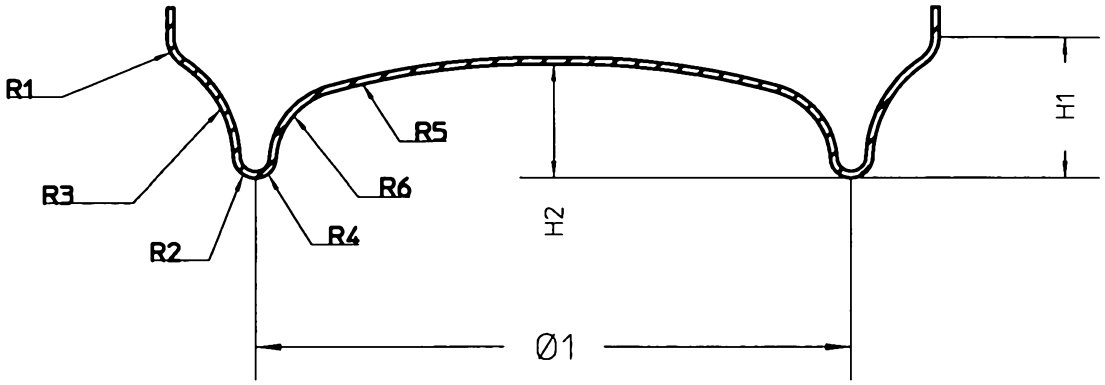

Figure 3

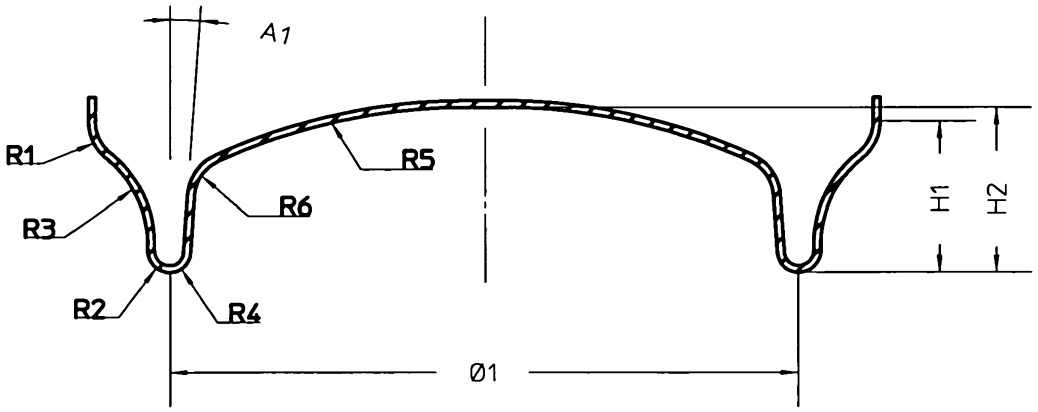

Figure 4

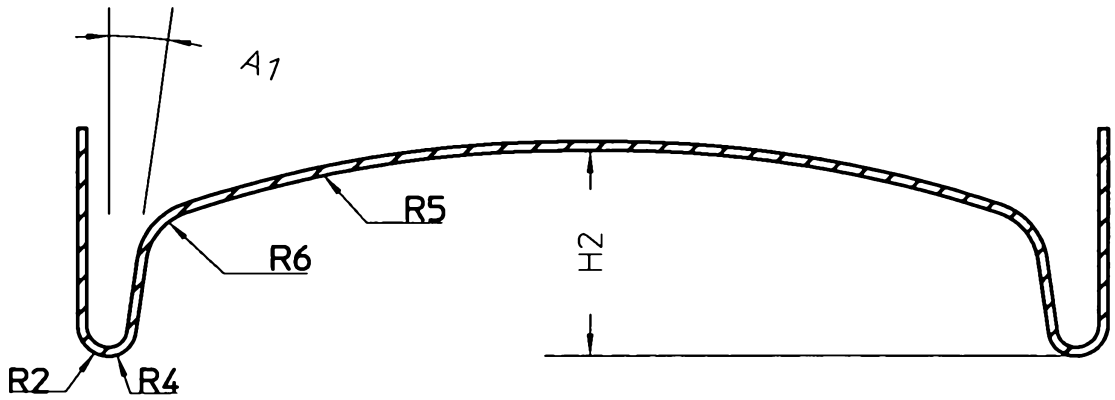

Figure 5