Sept. 29, 1931. J. T. POWELL ET AL 1,825,088

COMBINED SAFETY LIGHT AND ILLUMINATING LAMP

Filed April 10, 1930 2 Sheets-Sheet 1

Fig. 1.

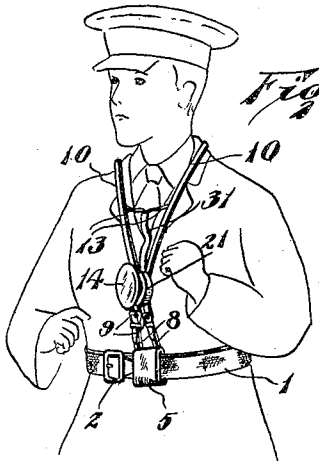

Fig. 2.

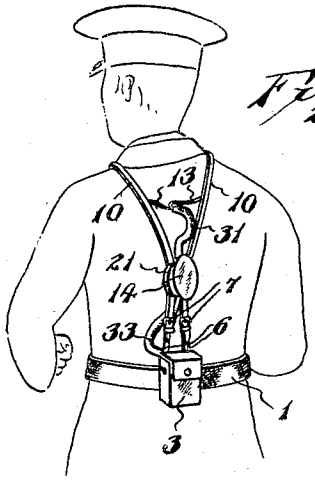

Fig. 4.

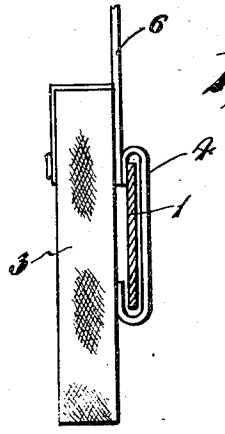

Fig. 3.

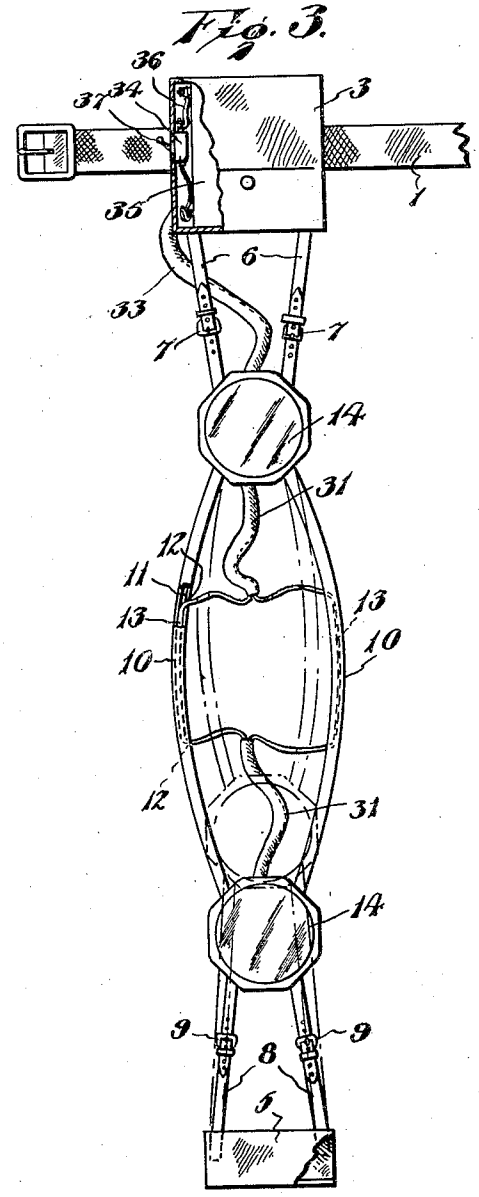

Inventors
John T. Powell
Edwin T. Powell

By Lacey & Lacey, Attorneys

Sept. 29, 1931. J. T. POWELL ET AL 1,825,088

COMBINED SAFETY LIGHT AND ILLUMINATING LAMP

Filed April 10, 1930 2 Sheets-Sheet 2

Fig. 5.

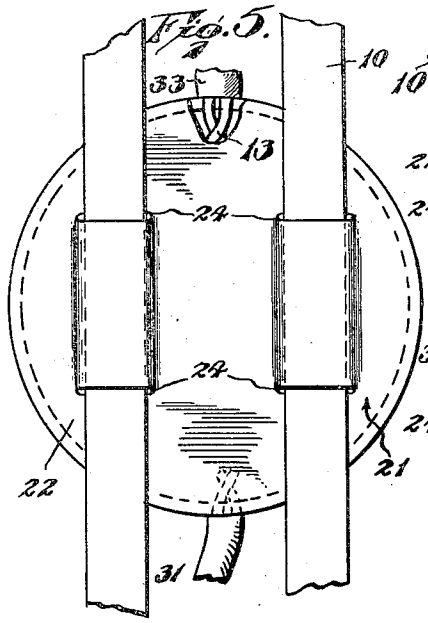

Fig. 6.

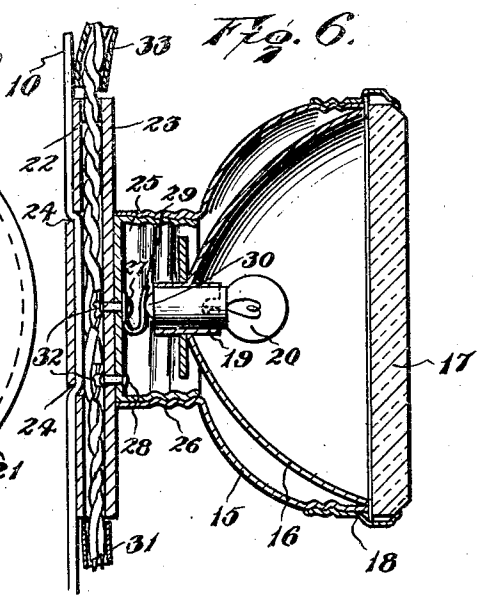

Fig. 7.

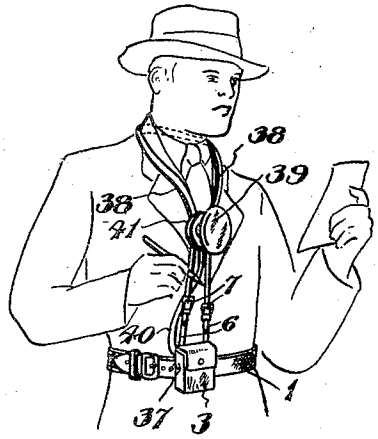

Fig. 8.

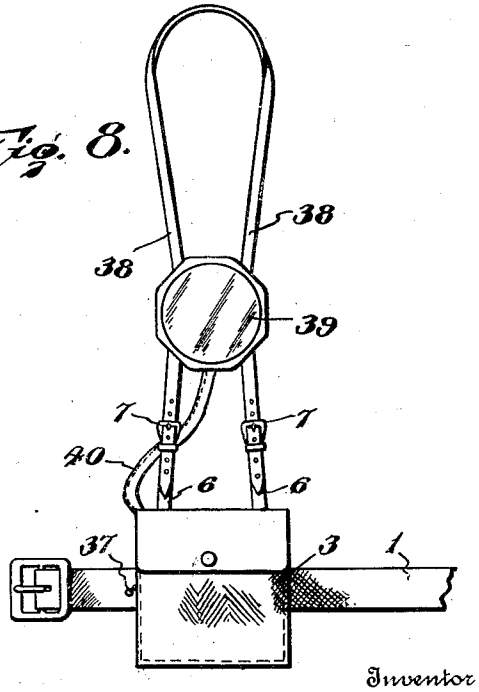

Inventor
John T. Powell
Edwin T. Powell

By Lacey & Lacey, Attorneys

Patented Sept. 29, 1931

1,825,088

UNITED STATES PATENT OFFICE

JOHN THOMAS POWELL AND EDWIN T. POWELL, OF WASHINGTON, DISTRICT OF COLUMBIA

COMBINED SAFETY LIGHT AND ILLUMINATING LAMP

Application filed April 10, 1930. Serial No. 443,161.

This invention relates to lights and more particularly to a light adapted to be worn by a person with the light disposed either at the front or at the front and back and serve either as a safety signal for the person or as illuminating means.

One object of the invention is to provide a light support in the form of a harness adapted to be worn by a person and including a waist-encircling belt from which a battery holder may be suspended and straps extending upwardly from the belt and serving to carry a light and support the light in such position that it may be easily seen if worn for safety purposes.

Another object of the invention is to so connect the light with the supporting straps that it may be vertically adjusted and moved to such a position that it may be easily seen or light from the lamp directed upon an object which the wearer desires to see. By this arrangement the light will be found very convenient for use by meter readers, linemen working upon a pole at night or by plumbers and other workmen in dark rooms or underground passages.

Another object of the invention is to provide a device of this character which if provided with lights at the front and back will be found very convenient for use by firemen as the front light will illuminate a room in which the fireman is standing and at the same time he will be provided with a light at his back so that other firemen will not be liable to turn a stream of water upon him without being aware of his presence.

Another object of the invention is to provide a device of this character having front and rear lights particularly adapted for use by pedestrians, messenger boys and others who are liable to be struck by automobiles when walking or riding bicycles along dark roads or streets.

The improved single or double light will also be found useful by boy scouts, quarantine inspectors, coast guards, State highway police and others who need to be protected by a light when at work or require a light in order to see while at work and at the same time desire to have their hands free.

The invention is illustrated in the accompanying drawings, wherein

Figure 1 is a perspective view showing one of the devices of the front and rear light type worn by a messenger.

Fig. 2 is a view similar to Fig. 1 looking at the rear,

Fig. 3 is a view showing the light-carrying apparatus or harness of Figs. 1 and 2 laid flat,

Fig. 4 is a fragmentary sectional view showing the manner in which a battery holder is connected with the waist-encircling belt of the device.

Fig. 5 is a fragmentary view showing the manner in which the lights or lamps are adjustably connected with the supporting straps,

Fig. 6 is a vertical sectional view through one of the lamps and its mounting means,

Fig. 7 is a perspective view showing a device of the single lamp type worn by a meter reader, and

Fig. 8 is a view showing the device of Fig. 7 laid flat.

The improved safety light and illuminating lamp constituting the subject-matter of this invention is intended to be worn upon a person either at the front if intended for illuminating purposes alone or at the front and back if the device is to serve both as a safety light and for illuminating purposes. It consists briefly of a harness to be worn by a person with lamp-supporting straps extending vertically between the waist and shoulders and a lamp at the front or one lamp at the front and another at the back. These lamps are permitted to be vertically adjusted so that they may be properly disposed upon a person and the adjustment referred to above not only permits the lamp or lamps to be disposed at a desired height between the waist and shoulders but also serves to cause the supporting straps to be drawn toward each other and held in snug fitting engagement with a person's body.

The belt 1 forming part of the harness is of sufficient length to be passed about a person's waist and secured by a buckle 2 preferably at the front and this belt carries a battery holder or receptacle 3 which is connected with the

belt by a loop 4 so that the battery holder may be moved along the belt and disposed at the center of the back, as shown in Figure 2, although it may be disposed at the front, as shown in Figure 7, if a single lamp is used as shown in this figure instead of lamps at the front and back, as shown in Figures 1 and 2. When both front and rear lamps are used, a loop 5 is provided at the front as well as a loop at the back. Short straps 6 extend upwardly from the battery holder 3 and have their lower ends secured between the battery holder and the loop 4 and these straps carry buckles 7 at their upper free ends. Similar straps 8 carrying buckles 9 at their free ends are secured to the loop 5 and the buckles 7 and 9 are engaged by the ends of straps 10 which are of sufficient length to extend across a person's shoulders with their end portions extending downwardly at the front and back. It will be readily understood that since the straps 10 have their ends engaged with buckles they may be adjusted after the harness has been put on and the straps drawn into proper engagement with the shoulders at opposite sides of a person's neck. Each of the straps 10 consists of a strip of pliable material, such as thin leather, strong fabric, or any other material found suitable, and this strip is folded longitudinally and secured thereby providing each strap with a longitudinal passage 11 having side openings 12. By this arrangement conductor wires 13 may be threaded through the intermediate portions of the straps and end portions of the wires passed outwardly through the openings 12.

The lamps 14 which are to be disposed at the front and back when the device is worn are of a duplicate construction and each consists of a casing 15 in which a reflector 16 is disposed, as shown in Figure 6. A lens 17 is provided at the open outer end of the casing and the reflector and this lens is secured by a rim or ring 18 having threaded engagement with the casing. Centrally of the reflector is mounted a bulb-receiving socket 19 and this socket is open at both ends so that when the bulb 20 has its base engaged in the socket the contact at the inner end of the bulb will be exposed. The mounting or backing 21 for the lamp consists of inner and outer disks 22 and 23 formed of stiff leather and the inner disk has upper and lower slits 24 formed transversely therein so that when the straps 10 are threaded through these slits the mounting will be slidable longitudinally upon the straps and sufficient frictional binding will take place between the straps and mounting to retain the mounting in a set position upon the straps. Against the outer surface of the disk 23 is disposed a socket 25 which is of a cup-like formation and the walls of this socket are threaded in order to be engaged by threads formed upon the neck 26 of the casing 15. Therefore, this casing may be threaded upon the socket with the lamp socket and inner or central portion of the reflector extending into the mounting similar to the manner in which the head of a flashlight is screwed into engagement with the battery-carrying barrel thereof. This socket is secured to the outer disk 23 by rivets 27 and 28 and a spring tongue or center contact 29 is carried by the rivet 27 in order to bear against the contact 30 at the inner end of the bulb base. The conductors or wires 13 are passed through protecting tubes 31 leading to the lamps and the stitches which extend about marginal portions of the disks 22 and 23 in order to secure the disks together terminate in spaced relation to each other in order to provide the upper and lower portions of each mounting with passages through which the conductor wires pass. These wires have their insulating coatings removed so that they may be soldered or otherwise secured to the rivets 27 and 28, as shown at 32, and after being passed through the mountings for the lamps the wires are passed through another protecting tube 33 leading from the lower end of the mounting for the rear lamp to the battery holder 3. It will be understood that the portions of the wires leading from the contacts or rivets of the rear lamp to the battery holder may be formed separate from the wires extending between the two lamps, and it will be apparent from an inspection of Figures 1, 2 and 3 that the wires and protecting tubes through which they pass are of such length that the lamps may be slid longitudinally upon the straps to adjusted positions. Within the battery holder is disposed a switch 34 of a conventional construction to which one terminal of a battery 35 is connected by a wire 36 and the ends of the wires 13 which enter the battery holder are secured one to a second terminal of the switch and the other to the second terminal of the battery. The actuating stem 37 of the switch projects outwardly through a side wall of the battery holder where it may be easily reached when the current is to be turned on and off.

When this device is in use, a person passes his head between the straps 10 so that the straps extend downwardly at the front and back and the belt is secured about the waist. The slit 5 and the battery holder are moved along the belt until they are disposed at the front and back and if necessary the ends of the straps are released from the buckles 7 and 9 and tightened or loosened until a proper fit is obtained. The lamps are then moved longitudinally upon the straps to dispose them in the desired positions upon a person at the front and back where they may be easily seen. By moving the lamps upwardly the portions of the straps which extend across a person's shoulders may be drawn toward each other, as indicated by dotted lines in Figure 3, and this will insure proper fit of the supporting

straps. By wearing this apparatus a messenger, pedestrian, fireman or others will be protected from danger of not being seen by others approaching from the rear or toward them and in addition the front lamp will serve as illuminating means whereby a person may easily see his way around in a dark room. This will be found very convenient for messengers delivering messages at nighttime as the lamps will not only serve to prevent danger of the messenger being run over by automobiles but also when the messenger reaches his destination the front lamp will serve very effectively to illuminate a street address or names upon a directory in a badly lighted hallway of an apartment house.

In Figures 7 and 8, there has been shown a device of this character intended for use by meter readers, telephone linemen, custom inspectors, plumbers and other workmen who only need a light at the front and desire to have the light directed upon work in front of them or a meter which is to be read and have both hands free to perform necessary work or make entries upon a card or record sheet. In this form of the invention the rear lamp is omitted and the battery holder 3 is disposed at the front when the belt is secured about a person's waist. The straps 6 extend upwardly from the battery holder and have their buckles 7 engaged with the lower ends of straps 38 which take the place of the straps 10 but are formed from a single strip of material which is intended to engage about a person's neck and extend forwardly across the shoulders with its ends extending downwardly, as shown in Figure 7. This strip which forms the straps 38 may consist of a single thickness of leather if so desired as the wires which supply current to the bulb of the lamp 39 extend upwardly from the battery holder through a flexible protecting tube 40 and have their upper ends extending into the lower portion of the backing 41 of this lamp and connected with terminals similar to those shown in Figure 6. A lamp of this character will be found very convenient as the lamp may be slid longitudinally upon its supporting straps and, therefore, light from the lamp may be directed upon a meter to be read or any object upon which work is to be performed.

Having thus described the invention, we claim:

1. A device of the character described comprising a support to be worn by a person and including a waist-encircling belt and straps extending upwardly therefrom to engage over a person's shoulders at opposite sides of the neck, an electric lamp having a backing slidably engaged with said straps with portions of the straps extending well above and below the lamp and mounting whereby the lamp may be slid longitudinally of the straps to adjusted position between a person's waist and shoulders, a battery holder, and conductors leading from said holder to said lamp and of sufficient length to permit sliding of the lamp.

2. A device of the character described comprising a waist-encircling belt, straps having their ends connected with said belt in transverse spaced relation to each other, a lamp having a mounting consisting of inner and outer plies, the inner ply being formed with slits and the straps being threaded through the slits to slidably connect the mounting with said straps, said lamp having terminals engaged through the outer ply of the mounting, a battery holder carried by said belt and slidable thereon for adjustment about a person's waist, and conductors leading from said battery holder and having portions engaged between the plies of the lamp mounting and secured to the terminals of said lamp.

3. A device of the character described comprising a waist-encircling belt, straps having their ends connected with said belt in transverse spaced relation to each other and being of a length to extend across a person's shoulders and downwardly at the front and back, a battery holder carried by said belt, said straps being adjustable to accommodate themselves to the person, front and rear lamps each having a mounting slidably engaged with the straps whereby the lamp may be moved to adjusted positions longitudinally of the straps between a person's waist and shoulders and also serve to prevent transverse movement of the straps and retain the straps firmly in place, and conductors for engagement with a battery carried by said battery holder having intermediate portions engaged with and extending longitudinally of shoulder engaging portions of the strap and loose end portions extending from the straps and connected with contacts of the lamps.

4. A device of the character described comprising a waist-encircling belt, straps having their ends connected with said belt in transverse spaced relation to each other and being of a length to extend across a person's shoulders and downwardly at the front and back, front and rear lamps each having a mounting slidably engaged with the straps whereby the lamp may be moved to adjusted positions longitudinally of the straps between a person's waist and shoulders and also serve to prevent transverse movement of the straps and retain the straps firmly in place, a battery holder, and flexible conductors having their intermediate portions extending along the intermediate shoulder engaging portions of said straps and having free end portions extending from the straps between same, one set of end portions of the conductors being connected to terminals of one lamp and the other set of end portions of the conductors being engaged with terminals of the other lamp and extending from the last mentioned

lamp for engagement with terminals of a battery carried by the battery holder.

5. A device of the character described comprising a waist-encircling belt, hollow straps having their ends connected with said belt in transverse spaced relation to each other and being of a length to extend across a person's shoulders and downwardly at the front and back, said straps being adjustable to accommodate themselves to the person, lamps at the front and back each having a mounting slidably engaged with said straps for adjustment of the lamp longitudinally of the straps between a person's waist and shoulders, conductors having intermediate portions encased by intermediate portions of said hollow straps and end portions extending from the straps through openings formed therein and connected with terminals of bulb-carrying sockets of the lamps, the extended end portions of the conductors being of sufficient length to permit sliding of the lamps upon the straps, a battery holder, and conductors leading from said battery holder to the terminals of one lamp.

6. A device of the character described comprising a waist-encircling belt, a flexible strip adapted to be disposed about a person's neck with end portions extending downwardly and constituting supporting straps, the ends of said straps being adjustably connected with said belt, a lamp having a mounting formed with upper and lower slits, said straps being threaded through the slits to slidably connect the mounting with said straps for adjustment longitudinally thereof, a battery holder, and conductors leading from said battery holder to said lamp.

7. A device of the character described comprising a waist-encircling belt, straps having their ends connected with said belt in transverse spaced relation to each other, a lamp having a mounting consisting of inner and outer plies, the inner ply having upper and lower slits formed therein and the lamp including a bulb-carrying socket and terminals engaged through the outer ply, said straps being threaded through the slits of the inner ply to slidably mount the lamp, a battery holder, and conductors leading from said battery holder and extending between the plies and secured to said terminals.

In testimony whereof we affix our signatures.

JOHN THOMAS POWELL.
EDWIN T. POWELL.