April 11, 1961 A. F. JOHNSON 2,978,820

DRAG LINE CRANE

Filed Nov. 13, 1957 4 Sheets-Sheet 1

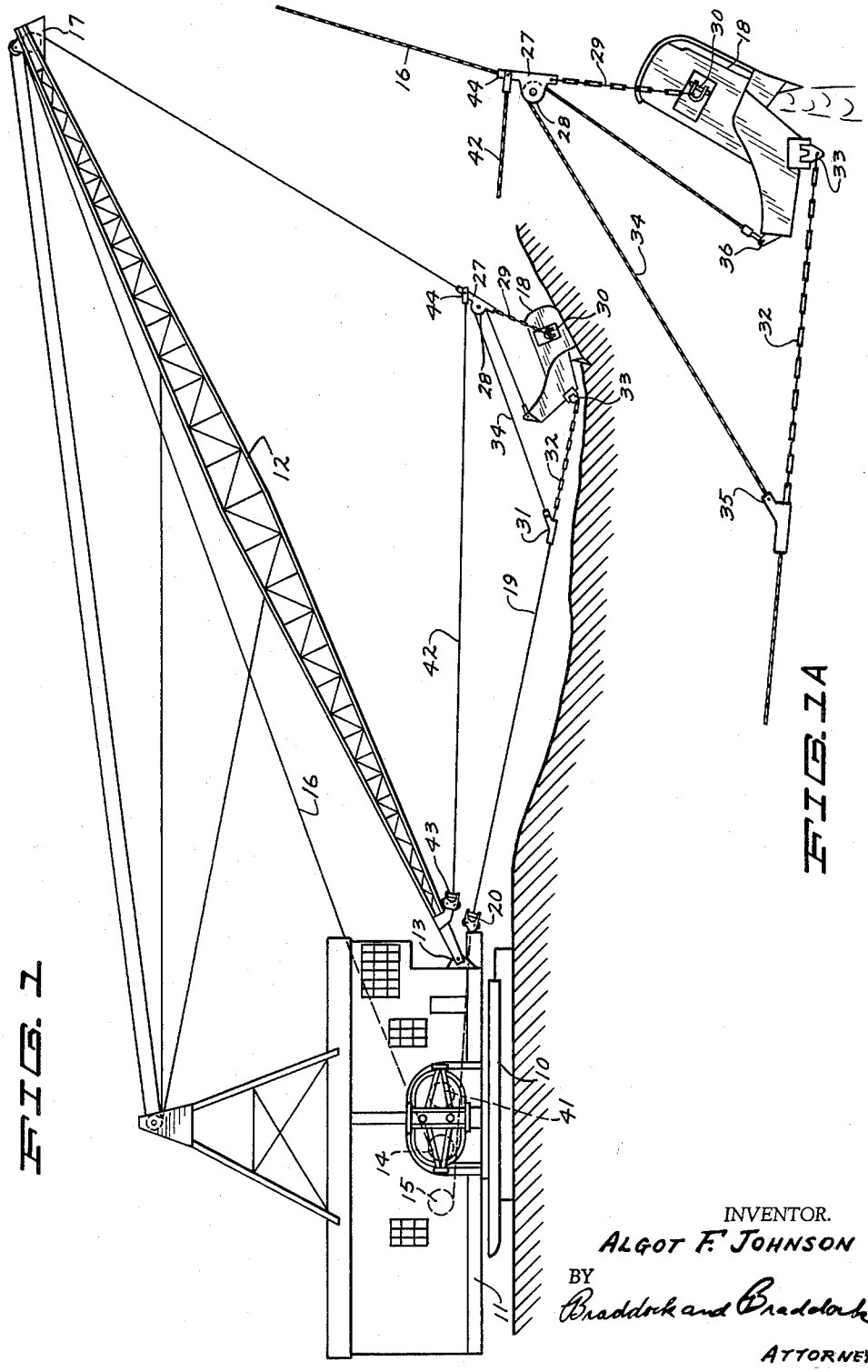

FIG. 1

FIG. 1A

INVENTOR.
ALGOT F. JOHNSON
BY
Braddock and Braddock
ATTORNEYS

April 11, 1961 A. F. JOHNSON 2,978,820

DRAG LINE CRANE

Filed Nov. 13, 1957 4 Sheets-Sheet 2

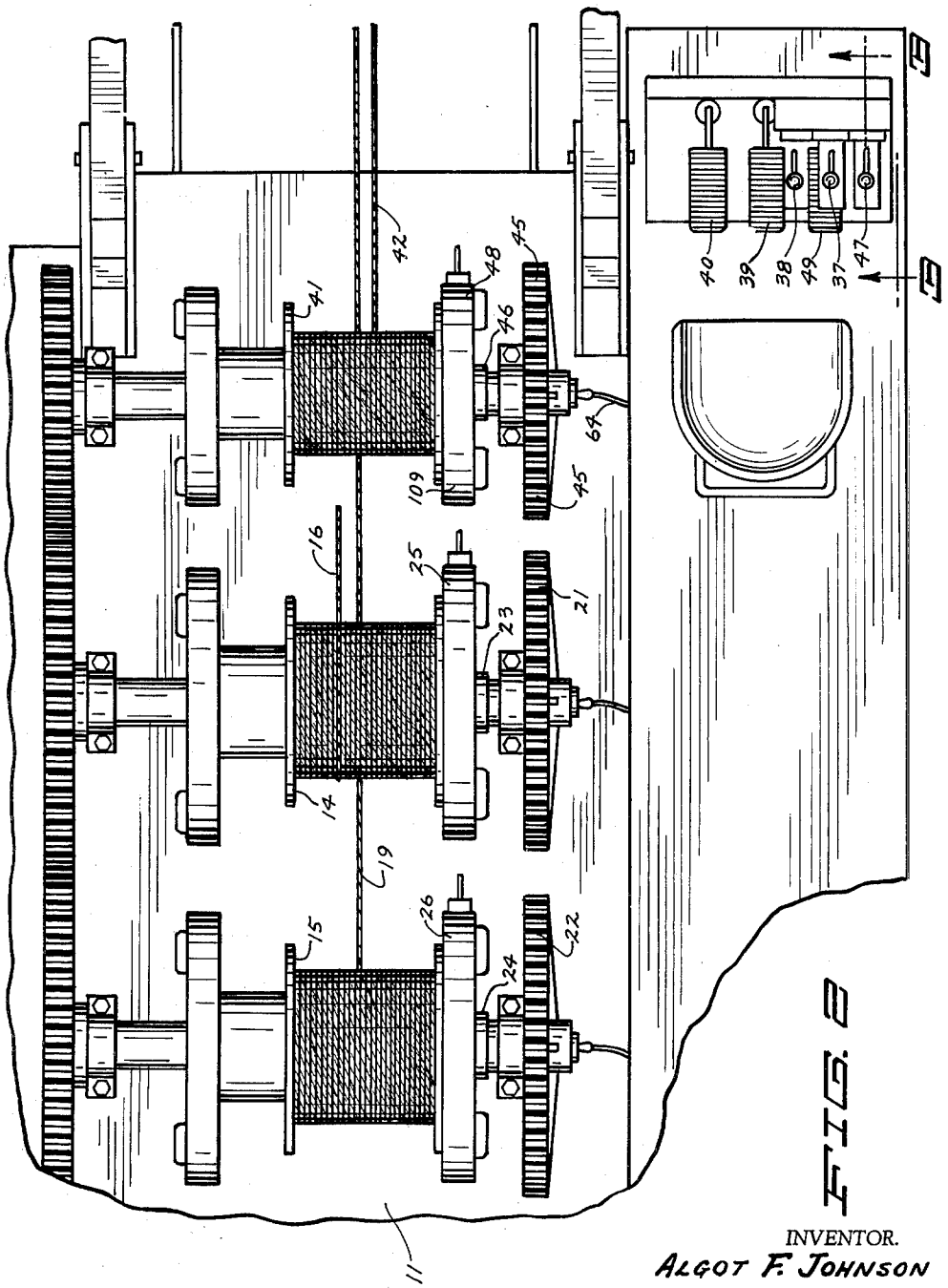

FIG. 2

INVENTOR.
ALGOT F. JOHNSON
BY
Braddock and Braddock
ATTORNEYS

April 11, 1961 A. F. JOHNSON 2,978,820

DRAG LINE CRANE

Filed Nov. 13, 1957 4 Sheets-Sheet 3

FIG. 3

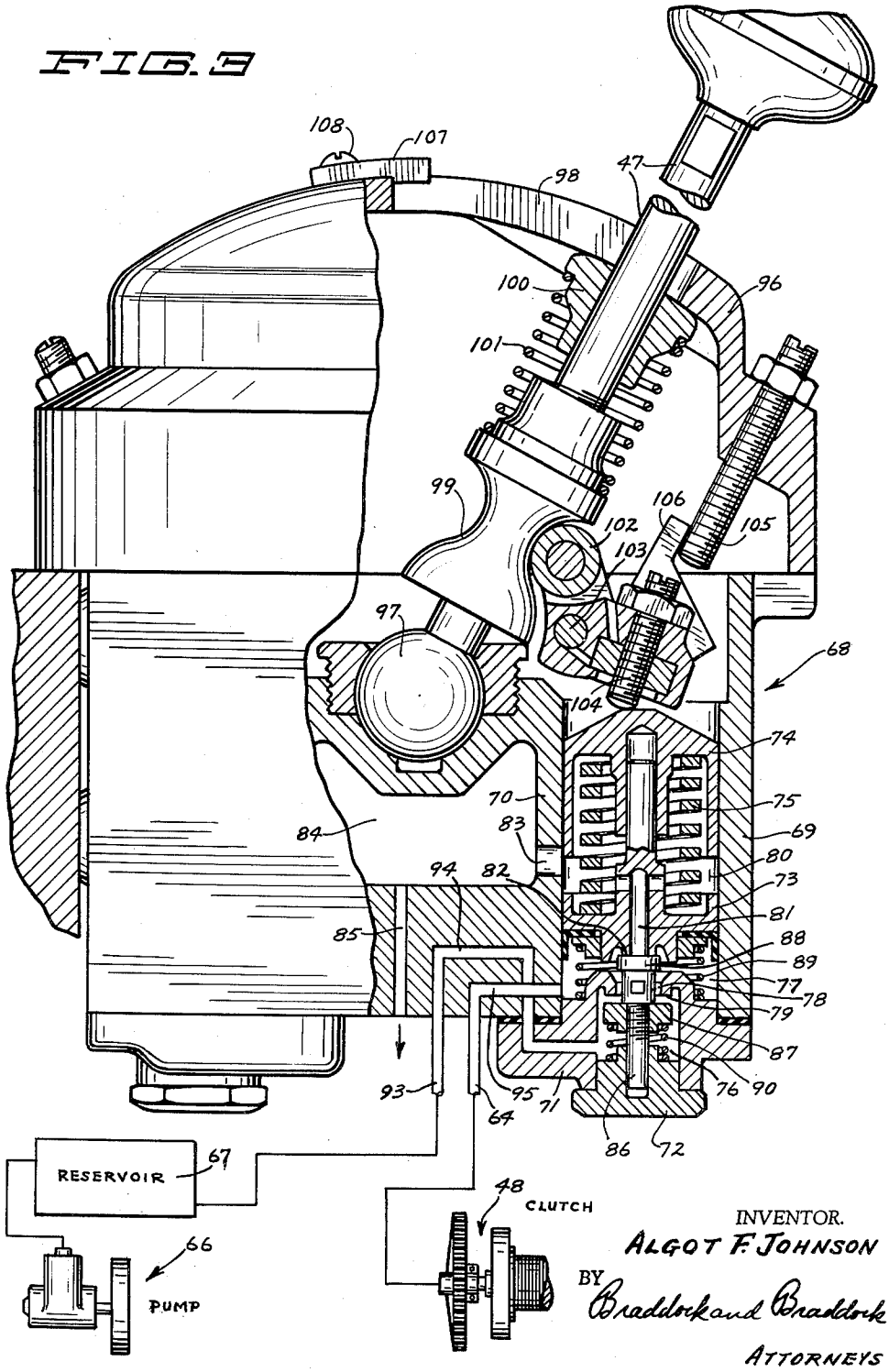

INVENTOR.
ALGOT F. JOHNSON
BY Braddock and Braddock
ATTORNEYS

April 11, 1961 A. F. JOHNSON 2,978,820

DRAG LINE CRANE

Filed Nov. 13, 1957 4 Sheets-Sheet 4

FIG. 4

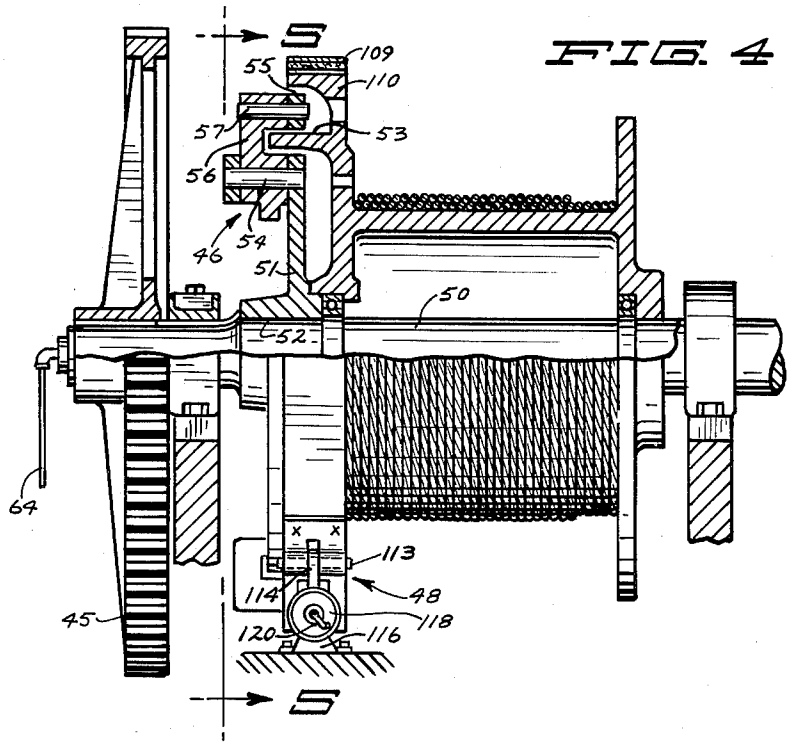

FIG. 5

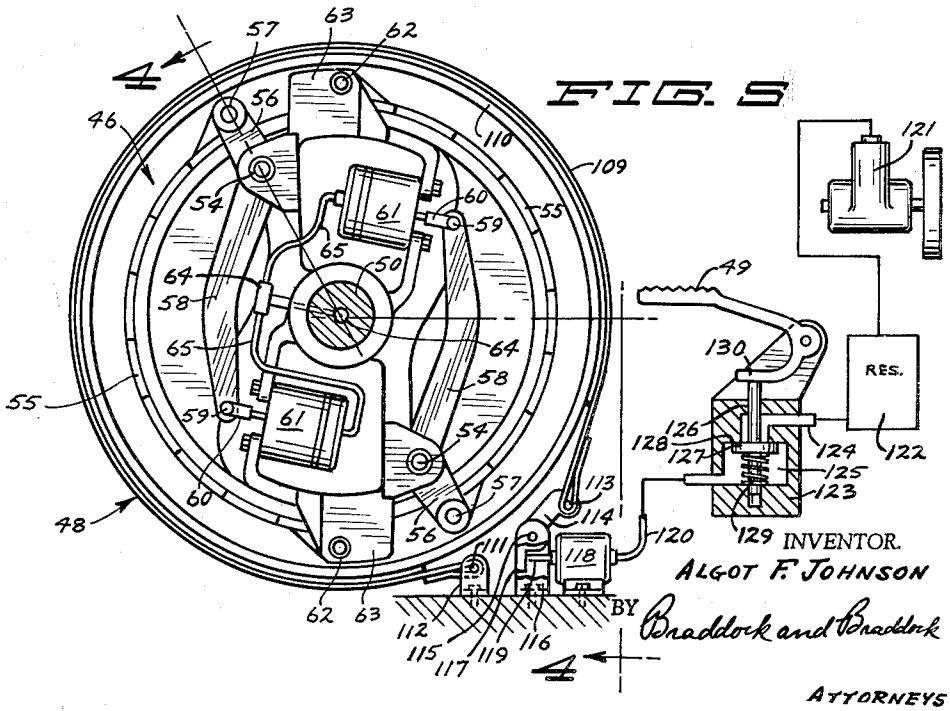

INVENTOR.
ALGOT F. JOHNSON
BY Braddock and Braddock
ATTORNEYS

United States Patent Office 2,978,820
Patented Apr. 11, 1961

2,978,820

DRAG LINE CRANE

Algot F. Johnson, Minneapolis, Minn., assignor to American Hoist & Derrick Company, St. Paul, Minn., a corporation of Delaware

Filed Nov. 13, 1957, Ser. No. 696,211

2 Claims. (Cl. 37—116)

The invention herein has relation to a drag line crane equipped with boom, hoist and drag lines or cables, bucket and actuating mechanism therefor, which may be of ordinary or preferred construction, and additionally including a novel and improved construction and arrangement for rendering the bucket of the crane capable of being dumped at any of a plurality of different locations inwardly of the outer, upper end of the boom of said crane which may be selected.

In the accompanying drawings forming a part of this specification,

Fig. 1 is a side elevational view of a drag line crane made according to the invention;

Fig. 1A discloses a bucket of the crane in a different position;

Fig. 2 is an enlarged plan view of a revolvable platform of the crane and operative devices thereon;

Fig. 3 is an enlarged sectional view, taken on line 3—3 in Fig. 2, of one of several different valve mechanisms of the crane additionally disclosing a pump, a reservoir and a clutch with which said valve mechanism is associated;

Fig. 4 is a sectional view, taken on line 4—4 in Fig. 5, detailing features of one of several different clutches and brakes of the crane; and

Fig. 5 is a sectional view, taken as on line 5—5 in Fig. 4, additionally disclosing operating mechanism for said brake.

In Fig. 1 of the drawings there is disclosed a so-called walking beam traction construction 10 well known in the art. A revolvable platform 11, shown in Fig. 2, is supported upon the construction 10 and may be rotated and controlled in any ordinary or preferred manner forming no part of the present invention. A boom 12 is rotatably mounted, as at 13, on the rotatable platform for swinging movement in a vertical plane.

Longitudinally spaced, transversely extending drums, denoted 14 and 15, respectively, are suitably and conveniently rotatably supported upon said rotatable platform. A hoist line or cable 16 on the drum 14 extends over a fairlead 17 on the upper end of the boom 12 to a bucket 18, and a drag line or cable 19 on the drum 15 extends over a fairlead 20 on the revolvable platform to said bucket. The drums 14 and 15 can be rotated in any ordinary or preferred manner, as by gears indicated 21 and 22, respectively. Clutches for said drums are represented 23 and 24, respectively, and brakes for the drums are designated 25 and 26, respectively.

The outer, lower end of the hoist line or cable 16 is secured to an element 27 supporting a sheave 28, and chains 29 connect said element 27 with rearward portions of the bucket 18, as at 30. The outer end of the drag line or cable 19 is secured to a member 31 and a chain 32 connects said member with a forward portion of said bucket, as at 33. A cable 34 riding the sheave 28 extends downwardly therefrom. A lower, inner end of said cable is connected, at 35, to the member 31 and a lower,

outer end of the cable is connected, at 36, to a forward portion of the bucket.

Actuator rods, denoted 37 and 38, on the revolvable platform are for controlling the clutches 23 and 24, respectively, and foot pedals, indicated 39 and 40, are for controlling the brakes 25 and 26, respectively.

Drag line cranes including features as hereinbefore described are now in common use. When the bucket is to be elevated, a clutch, such as 23, is actuated to connect a forcibly rotated gear, such as 21, with a drum such as 14. When the bucket is to be lowered, the clutch such as 23 is operated to release the drum and the bucket descends by gravity. When the bucket is to be dragged, as in Fig. 1, a clutch, such as 24, is actuated to connect a forcibly rotated gear, such as 22, with a drum such as 15. The drag line or cable 19 retains the cable 34 taut while dragging is accomplished and thus maintains the bucket in working position as in said Fig. 1. When the bucket is to be dumped, as in Fig. 1A, the clutch such as 24 is operated to release the drum and the bucket becomes tilted by gravity. In each instance of use the bucket of necessity is dumped at a location below the supporting means, such as the fairlead 17, for the hoist line or cable on an upper portion of the boom.

The brake 25 is for retaining the bucket 18 in elevated position when this is intentional, and the brake 26 is for holding said bucket in non-dumping position until it is to be unloaded.

The new and improved construction and arrangement which the invention presents is for rendering the bucket, such as 18, of a drag line crane capable of being dumped at any of a plurality of different locations, closer to or farther from a rotatable platform, such as 11, of the crane.

A transversely extending drum 41, in longitudinally spaced relation to the drums 14 and 15, is rotatably supported upon the rotatable platform. An auxiliary line or cable 42 on the drum 41 extends over a fairlead 43 on a lower portion of the boom 12 to the element 27 and is connected to said element at 44. The drum 41 can be rotated in any ordinary or preferred manner, as by a forcibly rotated gear 45. A clutch for the drum 41 is denoted 46, an actuator rod for said clutch is represented 47, a brake for said drum is indicated 48 and a foot pedal for said brake is designated 49.

The gear 45 is fixed upon a transverse shaft 50, the drum 41 is freely rotatable on said transverse shaft, and the clutch 46, very clearly disclosed in Figs. 4 and 5, is for releasably securing said gear and drum to each other. A spider 51 of said clutch, situated between the gear 45 and the drum 41, is fixed, at 52, on the transverse shaft 50. Said drum fixedly supports an annular member 53, at the end of the drum adjacent said spider. The spider rotatably supports, at 54, a pair of clutch arms at opposite sides thereof. A pair of part-circular clutch bands, each denoted 55, are situated at opposite sides of and in surrounding relation to the annular member 53. A shorter length 56 of each clutch arm is pivotally secured, at 57, to an end of the corresponding clutch band, and a longer length 58 of each clutch arm is pivotally secured, at 59, to a piston 60 of a rotochamber 61. The rotochambers are in diametrically opposed relation. The end of each clutch band opposite the end to which the shorter length of the corresponding clutch arm is connected is pivotally secured, at 62, to a projection 63 rigid with the spider 51. The projections are in diametrically opposed relation. A flexible rubber hose 64 leads through the transverse shaft 50 and is connected with the rotochambers through the medium of branch line connections 65. The part-circular clutch bands 55 normally will be in releasing relation to the annular member 53 and will be in grasping rela-

tion to said annular member when air under pressure is applied to the rotochambers 61. More explicitly, air under pressure admitted to said rotochambers will force the pistons 60, 60 outwardly to cause the longer lengths 58 of the clutch arms to be swung outwardly and the shorter lengths 56 of said clutch arms to be swung inwardly thus to cause the part-circular clutch bands to be gripped upon said annular member. Upon relief of air pressure in the rotochambers the clutch bands will return to their normal non-gripping position.

A pump 66 is for producing air under pressure in a reservoir 67, and a valve mechanism 68, clearly disclosed in Fig. 3 of the drawings, is for regulating and controlling flow of air under pressure from said reservoir to the rotochambers 61 of the clutch 46.

A body 69 of the valve mechanism 68 includes a hollow cylinder 70 open at its upper end and closed at its lower end by a housing 71 and a cap nut 72. The housing 71 is fitted into the lower end of the hollow cylinder and the cap nut 72 is fitted into a lower portion of said housing. A piston 73 and a piston guide 74 are snugly slidable in the hollow cylinder. The piston is above and in spaced relation to the housing 71, and the piston guide is above and in spaced relation to said piston. A compression coil spring 75 between the pston and said piston guide is in engaged relation with both.

A first chamber 76 is within the housing 71 and bounded by said housing and the cap nut 72. A second chamber 77 is within the hollow cylinder 70 and bounded by the housing and piston. A first port 78 connecting the first and second chambers is bounded by a first downwardly facing valve seat 79 in said first chamber. A third chamber 80 is within said hollow cylinder and bounded by said piston and the piston guide 74. A second port 81 through the piston 73 and connecting the second and third chambers is bounded by a second downwardly facing valve seat 82 in said second chamber. The third chamber 80 is open, at 83, to a fourth chamber 84 provided by the body 69 of the valve mechanism 68, and said fourth chamber is open to atmosphere by way of a third port 85.

A double acting valve member 86, guided in the housing 71 and the cap nut 72, rigidly supports lower and upper valves, denoted 87 and 88, respectively, engageable with the valve seats 79 and 82. A compression coil spring 89, between the housing 71 and the piston 73, normally retains the valve seat 82 in spaced relation to the valve 88, and a compression coil spring 90, between the cap nut 72 and the valve 87, normally retains said last mentioned valve in engaged relation with the valve seat 79.

A connection 93 leads from the reservoir 67 through a passageway 94 into the first chamber 76 at a side of the valve 87 opposite the valve seat 79. A passageway 95 leads from a location in the second chamber 77 at the side of the valve 88 opposite the valve seat 82 to the flexible rubber hose 64.

A cover 96 for the body 69 of the valve mechanism 68 is suitably and conveniently secured down on said valve body. The actuator rod 47 is mounted, as at 97, in the body 69 for rotative movement and extends outwardly through an elongated slot 98 in the cover 96. A cam 99 is fixed on said actuator rod in adjacent relation to its mounting means, and an element 100 for retaining the actuator rod in any position at which manually set is slidable longitudinally on said actuator rod. A compression coil spring 101 on the actuator rod between the cam 99 and the element 100 resiliently urges said element into engagement with an internal surface of the cover 96.

The cam 99 is engageable with a roller 102 on a first arm of a rocker pivotally mounted, at 103, in the body 69. A second arm of the rocker supports an adjusting screw 104 engagable with a surface of the piston guide 74 opposite the piston 73. A set screw 105 in the cover 96, with which a projection 106 rigid with the rocker is engagable, limits the extent to which said rocker can rotate in clockwise direction in Fig. 3.

The actuator rod 47 could be in substantially vertical position to situate the cam 99 in released relation to the rocker thus to permit the compression coil spring 89 to retain the valve seat 82 in spaced relation to the valve 88 and the compression coil spring 90 and air under pressure in the first chamber 76 to retain the valve 87 is engaged relation with the valve seat 79. Flow of air under pressure from the first chamber 76 to the second chamber 77 will be prevented when the valve 87 and valve seat 79 are engaged, and the flexible rubber hose 64 will be vented to atmosphere when the valve 88 and valve seat 82 are in spaced relation. Air under pressure will pass from said flexible rubber hose by way of the passageway 95, the second chamber 77, the second port 81, the third chamber 80 and the opening 83 to the fourth chamber 84 when the valve 88 and valve seat 82 are disengaged, and said fourth chamber constantly is open to atmosphere by way of the third port 85.

The actuator rod 47 will be swung toward or to the position as in Fig. 3 of the drawings when operating pressure is to be applied to the clutch 46. Swinging movement of said actuator rod will cause the cam 99 to engage the roller 102 on the rocker and rotate said rocker in clockwise direction in said Fig. 3 thus to cause the piston guide 74 to be depressed through the medium of the adjusting screw 104. In turn, said piston guide will move the compression coil spring 75 and the piston 73 downwardly to engage the valve seat 82 with the valve 88 and remove the valve 87 from the valve seat 79 against force of the compression coil springs 89 and 90. Flow of air under pressure from the second chamber 77 to the third chamber 80 will be prevented when the valve 88 and the valve seat 82 are engaged, and the reservoir 67 and the flexible rubber hose 64 will be interconnected when the valve 87 is in spaced relation to the valve seat 79. Air under pressure will pass from said reservoir to said flexible rubber hose by way of the connection 93, the passageway 94, the first chamber 76, the first port 78, the second chamber 77 and the passageway 95 when the valve 87 and the valve seat 79 are disengaged.

When the actuator rod 47 is swung back to position to release the rocker, and thus release the piston guide 74, the compression coil spring 89 and air pressure built up in the second chamber 77 beneath the piston 73 will elevate said piston and thereby remove the downward force which was operative on the double acting valve member 86. Concurrently, the compression coil spring 90 will elevate said double acting valve member and engage the valve 87 against the valve seat 79. Upward movement of the piston will disengage the valve seat 82 from the valve 88 and thus open the second chamber 77 to the third chamber 80.

When the auxiliary line or cable 42 is to be hauled in the actuator rod will be swung to operative position, as in Fig. 3, to cause the clutch 46 to be actuated to connect the forcibly rotated gear 45 with the drum 41. When hauling in of said auxiliary line of cable is to cease said actuator rod will be swung to or toward neutral position to cause pressure of air in the flexible rubber hose 64 to be relieved and the clutch 46 to be released, or operative under reduced pressure in a manner hereinafter to be set forth.

The clutches 23 and 24 for the drums 14 and 15, respectively, can be of construction and operative in the same general manner as disclosed and hereinbefore described with reference to the clutch 46 for the drum 41.

The valve mechanism 68 is so constructed that application of pressure to or relief of pressure from the clutch 46 can be directly in proportion to pressure applied to the compression coil spring 75 in response to actuation of the adjusting screw 104 through the instrumentality of the actuator rod 47 and the rocker supporting

said adjusting screw. That is, a balance of forces can be established between air under pressure in the second chamber 77 and the compression coil spring 75 so that pressure of air delivered to the clutch, by way of the flexible rubber hose 64, will be a function of force exerted on the compression coil spring 75 through the medium of the adjusting screw 104. Pressure of air delivered to said clutch will be increased in response to increase of pressure on said compression coil spring 75, and vice versa. When balance of forces becomes established between air under pressure in the second chamber 77 and the compression coil spring 75, pressure of air in said second chamber will elevate the piston 73 an amount sufficient to permit the valve 87 to become seated but insufficient to unseat the valve 88, and pressure operative upon the clutch will have the same value as that existent in said second chamber when said valve 87 becomes unseated. In short, by employment of a valve mechanism such as 68, a clutch, such as 46, can be operative under any pressure which may be selected.

The brake 48 for the drum 41, of construction to be described, will be applied upon cessation of inward movement of the auxiliary and hoist lines or cables 42 and 16, and said brake will be released after dumping of the bucket 18 is accomplished to permit said auxiliary line or cable to be played out and said hoist line to swing outwardly.

Means is included for retaining the auxiliary line or cable 42 taut when it is not being hauled in and the hoist line or cable 16 is swung inwardly. Otherwise, there would be undesirable slack in and dangling of said auxiliary line or cable.

A stop element 107, secured at 108 to the cover 96 on the body 69 of the valve mechanism 68, projects into the end portion of the elongated slot 98 opposite the set screw 105 and is for limiting the extent to which the actuator rod 47 can be swung toward the left in Fig. 3 of the drawings. The construction and arrangement will be such that when said actuator rod is engaged with said stop element, balanced forces in the second and third chambers 77 and 80, controlled by pressure in said second chamber and the compression coil spring 75 and a function of pressure exerted by the adjusting screw 104 on said compression coil spring, will cause both of the valves 87 and 88 to be closed and air to be existent in the second chamber and the flexible hose 64 under enough pressure to cause the clutch bands 55, 55 to be engaged with the annular member 53 on the drum 41 with force of value to rotate the drum 41 to reel the auxiliary line or cable inwardly so that there will be no slack therein while the hoist line or cable 16 is being swung inwardly and said auxiliary line or cable is not being hauled in, but low enough to permit said annular member to slip relative to said clutch bands when the auxiliary hoist line or cable has become taut. The actuator rod 47 will be situated as in Fig. 3 when the clutch 46 is to be operable to haul in the auxiliary line or cable 42, and will be situated against the stop element 107 when said clutch is to be operable to retain said auxiliary line or cable taut.

A brake band 109 of the brake 48 surrounds and is releasably engageable with an annular member 110 rigid with the drum 41. One end of said brake band is secured, as at 111, to a first bracket 112 on the rotatable platform 11. The other end of the brake band is connected, at 113, to a longer length 114 of a brake arm itself pivotally mounted, as at 115, on a second bracket 116 on said rotatable platform. A shorter length 117 of said brake arm is at the side of its pivotal support opposite the longer length. A rotochamber 118 fixed on the rotatable platform includes a piston 119 engageable with the shorter length of the brake arm. A hose 120 leads into and is connected with said rotochamber. The brake band 109 normally will be in releasing relation to the annular member 110 and will be in grasping relation to said annular member when air under pressure is applied to the rotochamber 118. Air under pressure admitted to said rotochamber will force the piston 119 outwardly and cause the shorter length of the brake arm to be swung toward the left and the longer length of said brake arm to be swung downwardly in Fig. 5 of the drawings thus to cause said brake band to be gripped upon the annular member 110. Upon relief of pressure in the rotochamber the brake band will return to its normal non-gripping position.

A pump 121 is for producing air under pressure in a reservoir 122, and a valve structure 123, disclosed in Fig. 5, is for controlling flow of air under pressure from said reservoir to the rotochamber 118.

A connection 124 leads from the reservoir 122 into a chamber 125 provided by a housing of the valve structure 123. A valve stem 126 in said chamber and suitably guided in said housing rigidly supports a valve 127 engageable with a valve seat 128 within the chamber and surrounding the connection 124. An outlet from the chamber, at the side of the valve 127 opposite the valve seat 128, is connected with the hose 120. A compression coil spring 129 on the valve stem 126 normally urges said valve into engagement with said valve seat, and an extension of said valve stem projects to position above the valve housing. An actuator 130 of the foot pedal 49 is engageable with the valve stem extension.

In Fig. 5 of the drawings the foot pedal is inoperative and the valve 127 is engaged with the valve seat 128 thus to prevent passage of air under pressure from the reservoir 122 to the hose 120. The foot pedal is to be depressed, against force of the compression coil spring 129, when the brake 48 is to be operative, and released when said brake is to be inoperative. Depression of said foot pedal will remove the valve from the valve seat and permit passage of air under pressure from the reservoir to the hose 120, and release of the foot pedal will shut off the hose from the reservoir and relieve pressure in the hose.

The brakes 25 and 26 for the drums 14 and 15, respectively, can be of construction and operative in the manner as set forth in connection with the brake 48 for the drum 41.

What is claimed is:

1. In a drag line crane, the combination with a supporting platform, a boom mounted on said supporting platform for swinging movement in a vertical plane, first and second drums mounted on the suporting platform, a bucket, a hoist line cable on said first drum extending upwardly along and over a fairlead on the upper end of said boom and downwardly therefrom and connected to said bucket, first means for forcibly rotating said first drum, a first clutch for releasably securing the first drum to said first means, a first brake for said first drum, a drag line cable on said second drum and connected to the bucket, second means for forcibly rotating said second drum, a second clutch for releasably securing the second drum to said second cable and a second brake for said second drum, of a third drum mounted on said supporting platform, an auxiliary line cable on said third drum extending over a fairlead adjacent to the lower end of the boom and connected with said hoist line cable at a location between the boom and said bucket, third means for forcibly rotating said third drum, a third clutch for releasably securing the third drum to said third means, means for actuating said third clutch selectively to cause said third means and said third drum to be in firm clamping or slipping engagement and a third brake for said third drum.

2. In a drag line crane, the combination with a supporting platform, a boom mounted on said supporting platform for swinging movement in a vertical plane, first and second drums mounted on the supporting platform, a bucket, a hoist line cable on said first drum extending upwardly along and over a fairlead on the upper end of

said boom and downwardly therefrom and connected to said bucket, first means for forcibly rotating said first drum, a first clutch for releasably securing the first drum to said first means, a first brake for said first drum, a drag line cable on said second drum and connected to the bucket, second means for forcibly rotating said second drum, a second clutch for releasably securing the second drum to said second cable and a second brake for said second drum, of a third drum mounted on said supporting platform, an auxiliary line cable on said third drum extending over a fairlead adjacent to the lower end of the boom and connected with said hoist line cable at a location between the boom and said bucket, third means for forcibly rotating said third drum, a third clutch for releasably securing the third drum to said third means, means for actuating said third clutch selectively to cause said third means and said third drum to be in clamping

relation under force of value sufficiently large to rotate the third drum to reel said auxiliary line cable inwardly to prevent slack therein while said hoist line cable is being swung inwardly and said auxiliary line cable is not being hauled in but under value sufficiently small to permit slipping engagement between said third means and said third drum when the auxiliary hoist line cable has become taut and a third brake for said third drum.

References Cited in the file of this patent

UNITED STATES PATENTS

1,059,334	Lipps	Apr. 15, 1913
1,100,052	Burke et al.	June 16, 1914
1,183,948	Bunnell	May 23, 1916
2,214,026	Martinson	Sept. 10, 1940
2,572,029	Huston	Oct. 23, 1951