Oct. 7, 1924. 1,510,761

O. S. BURMAN

DOUBLE SWINGING FAUCET NOZZLE

Filed Dec. 19, 1921

Fig. 1

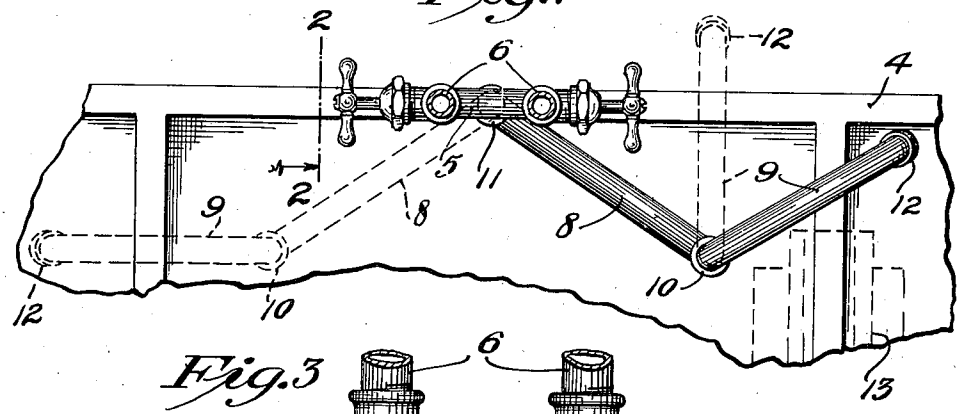

Fig. 3

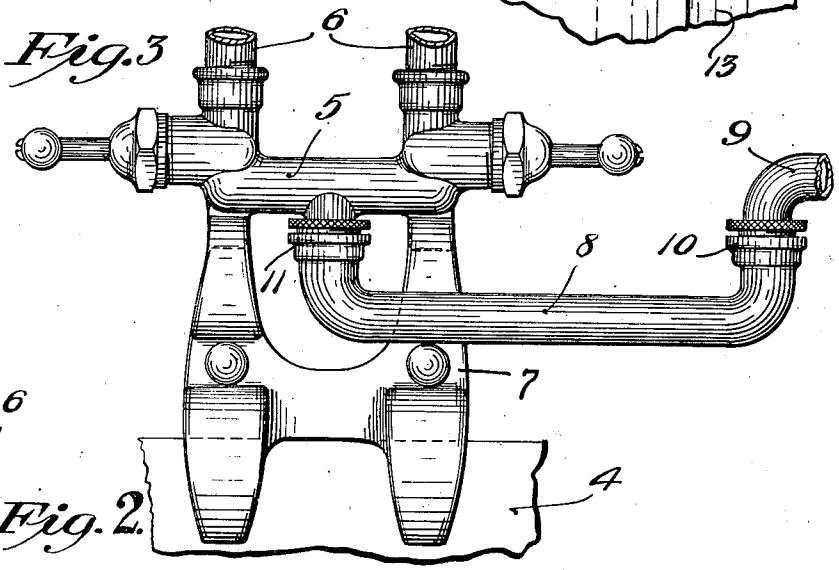

Fig. 2.

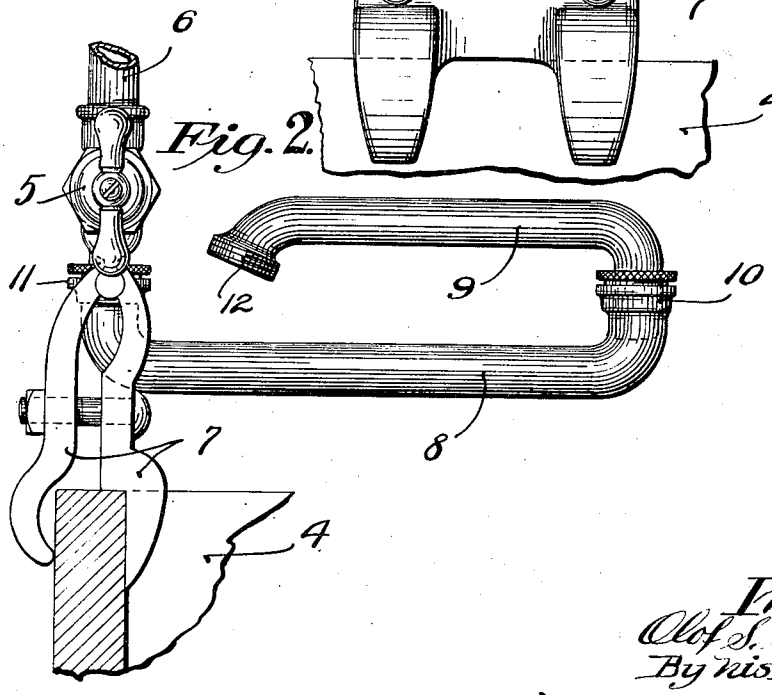

Inventor
Olof S. Burman
By his Attorneys
Merchant and Gilpin

Patented Oct. 7, 1924. 1,510,761

UNITED STATES PATENT OFFICE.

OLOF S. BURMAN, OF MINNEAPOLIS, MINNESOTA, ASSIGNOR TO WOLVERINE BRASS WORKS, OF GRAND RAPIDS, MICHIGAN, A CORPORATION OF MICHIGAN.

DOUBLE SWINGING FAUCET NOZZLE.

Application filed December 19, 1921. Serial No. 523,355.

To all whom it may concern:

Be it known that I, OLOF S. BURMAN, a citizen of the United States, residing at Minneapolis, in the county of Hennepin and State of Minnesota, have invented certain new and useful Improvements in Double Swinging Faucet Nozzles; and I do hereby declare the following to be a full, clear, and exact description of the invention, such as will enable others skilled in the art to which it appertains to make and use the same.

My present invention relates to swinging nozzles especially adapted for use in connection with faucets of the type disclosed in my U. S. Letters Patent #1,398,768, of November 29, 1921, entitled "Faucet and attaching bracket", and has for its object to provide a double swinging nozzle which may be adjusted to discharge into any one of the compartments of a multiple-compartment laundry tray or outside thereof.

To the above end, generally stated, the invention consists of the novel devices and combinations of devices hereinafter described and defined in the claim.

In the accompanying drawings, which illustrate the invention, like characters indicate like parts throughout the several views.

Referring to the drawings:

Fig. 1 is a fragmentary plan view of a three-compartment laundry tray having attached thereto a clothes wringer indicated by broken lines, and a double faucet equipped with the improved double swinging nozzle, indicated in different positions by means of broken lines;

Fig. 2 is a view principally in side elevation with some parts sectioned on the line 2—2 of Fig. 1, on an enlarged scale; and

Fig. 3 is a front elevation of the parts shown in Fig. 2.

The numeral 4 indicates a three-compartment laundry tray and the numeral 5 indicates a double faucet attached to the lower ends of depending hot and cold water pipes 6. The faucet 5 is secured by an attaching bracket 7 to the back of the intermediate compartment of the laundry tray 4. Said faucet and attaching bracket 7 are fully described and claimed in my patent heretofore identified.

The improved double faucet comprises an inner section 8 and an outer section 9 connected by a water-tight swivel joint 10 and said inner nozzle section 8 is connected by a like joint 11 to the body of the faucet 5 on the under side thereof. The joints 10 and 11 are arranged to permit independent horizontal swinging movement of the nozzle sections 8 and 9, and the outer of said sections is arranged to swing over said inner section and is of such length as to clear the inner upturned end of the nozzle section 8 and the faucet 5 and make a complete rotation. The outer end of the outer nozzle section 9 is turned downward so as to discharge water at the desired angle and is provided with screw-threads to permit the attachment of a hose thereto.

The length of the nozzle is such as to permit the same to be adjusted to discharge water into any one of the three compartments of the tray 4. Said nozzle may also be adjusted to discharge outside of the tray and onto the floor to furnish scrub water or into a pail or other receptacle placed thereunder. Said nozzle may also be adjusted to clear a clothes wringer 13, mounted on either of the partitions in the tray, and discharge water into either of the end compartments, as shown by full lines in Fig. 1. By positioning the outer nozzle section 9 over the inner nozzle section 8, the nozzle occupies very little space when idle or during adjustment from one position to another.

The above described invention has, in actual usage, proven highly efficient for the purpose had in view.

What I claim is:

A faucet having a depending nipple and a horizontal swinging nozzle comprising inner and outer sections, the end portions of said inner nozzle section being turned up and the end portions of the outer nozzle section being turned down, the inner end of the inner nozzle section being swivelled to said nipple, and the inner end of the outer nozzle section being swivelled to the outer end of the inner nozzle section, said outer nozzle section being free to make a complete rotation over said inner nozzle section.

In testimony whereof I affix my signature.

OLOF S. BURMAN.