Oct. 27, 1936. J. V. SALA 2,059,038

MACHINE FOR SELECTING CORK DISKS

Filed March 14, 1934 7 Sheets-Sheet 1

FIG. 1.

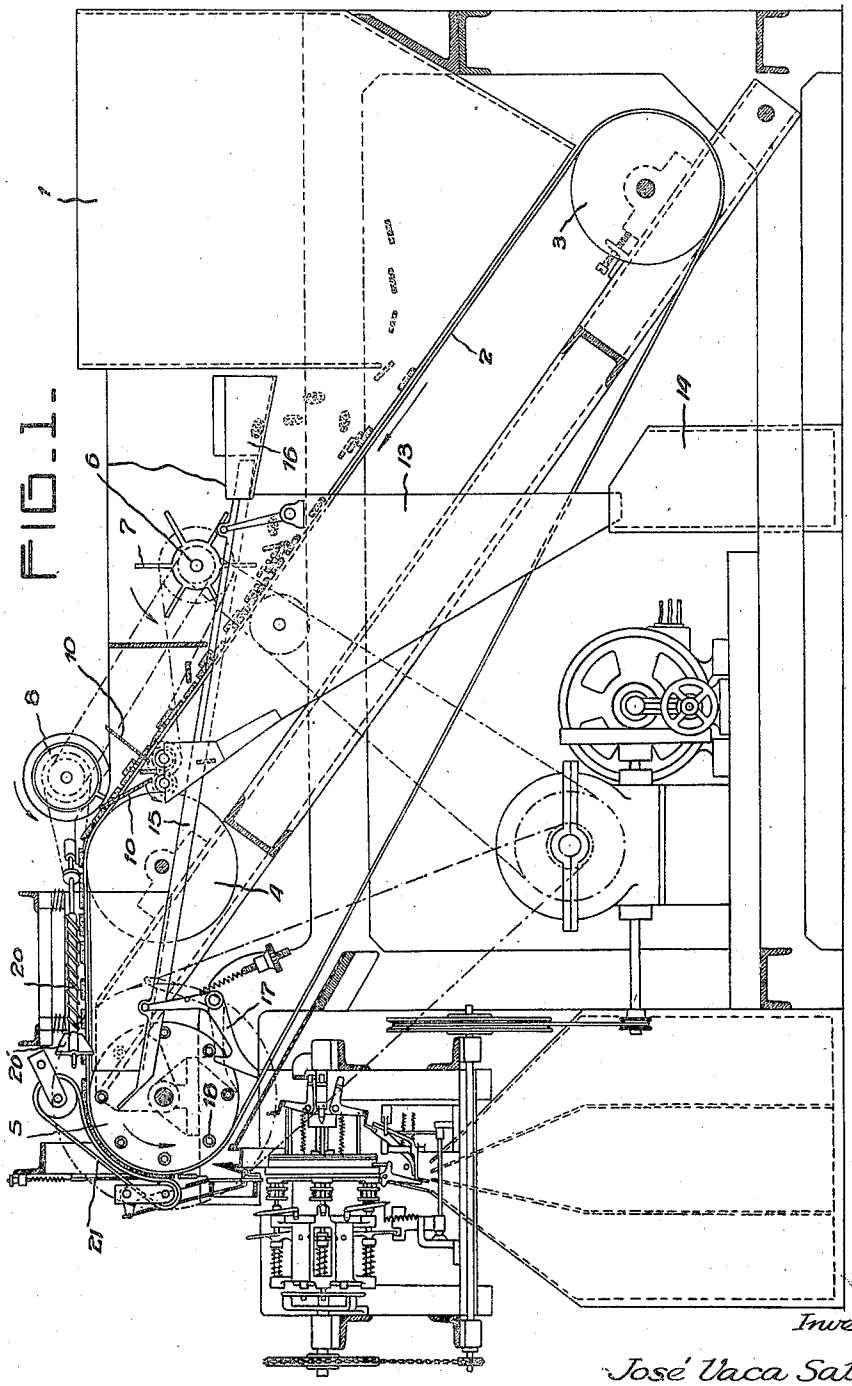

Inventor.

José Vaca Sala.

Cushman Darby & Cushman

Attorneys

Oct. 27, 1936. J. V. SALA 2,059,038

MACHINE FOR SELECTING CORK DISKS

Filed March 14, 1934 7 Sheets-Sheet 2

FIG. 2.

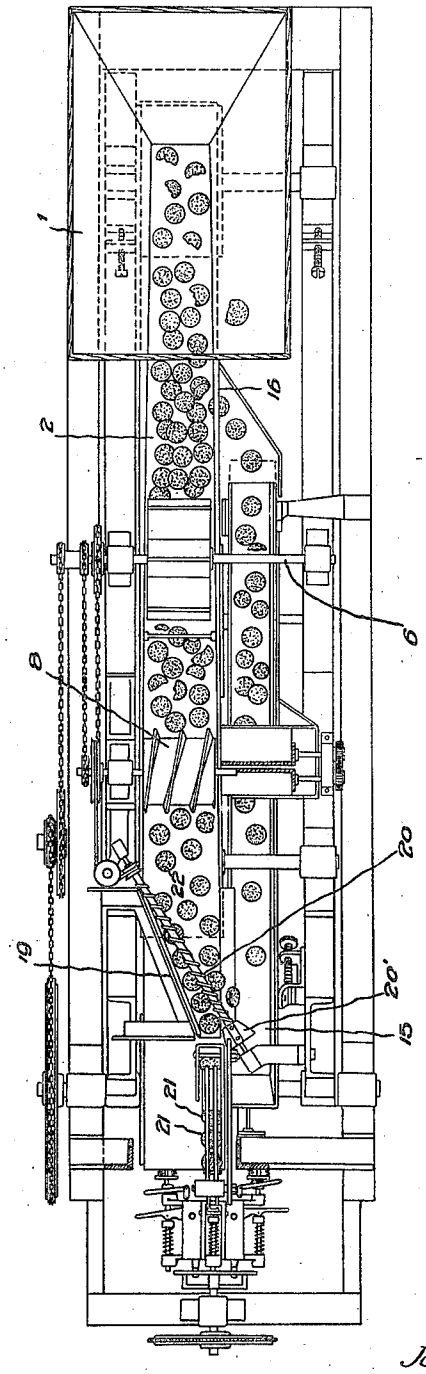

Inventor

José Vaca Sala.

Cushman Darby & Cushman

Attorneys

Oct. 27, 1936. J. V. SALA 2,059,038

MACHINE FOR SELECTING CORK DISKS

Filed March 14, 1934 7 Sheets-Sheet 3

FIG. 2.

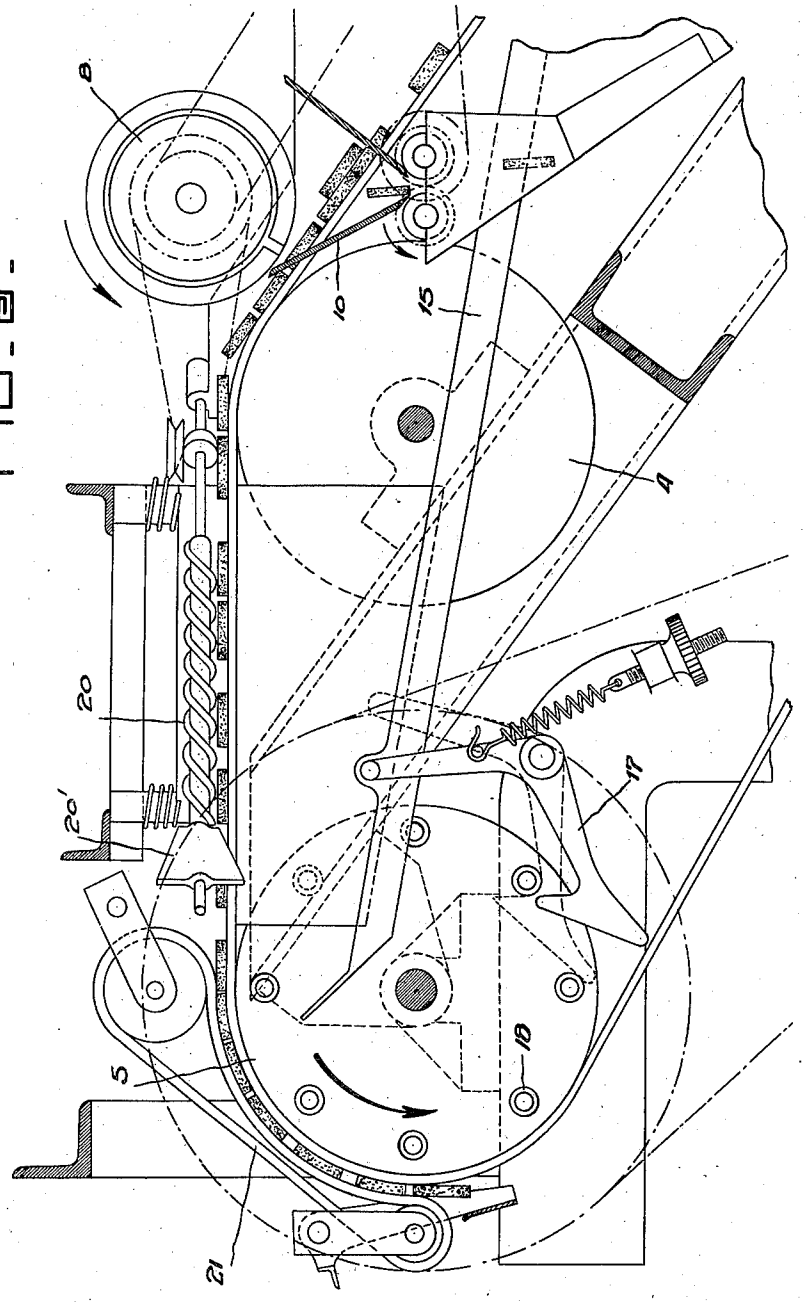

Inventor
Jose Vaca Sala,
Cushman Darby & Cushman
Attorneys

Oct. 27, 1936. J. V. SALA 2,059,038

MACHINE FOR SELECTING CORK DISKS

Filed March 14, 1934 7 Sheets-Sheet 4

FIG. 4.

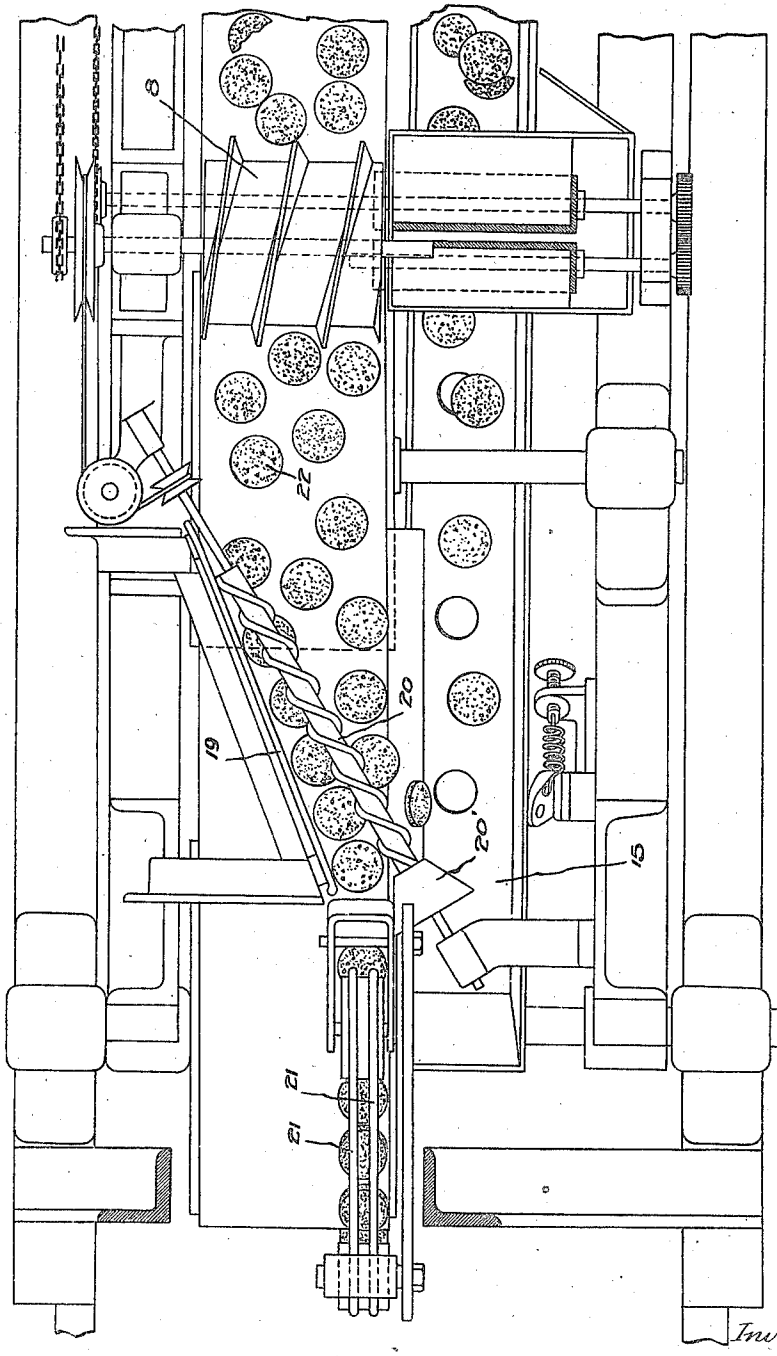

Inventor

José Vaca Sala

Cushman Darby & Cushman

Attorneys

Oct. 27, 1936. J. V. SALA 2,059,038

MACHINE FOR SELECTING CORK DISKS

Filed March 14, 1934 7 Sheets-Sheet 5

FIG. 5.

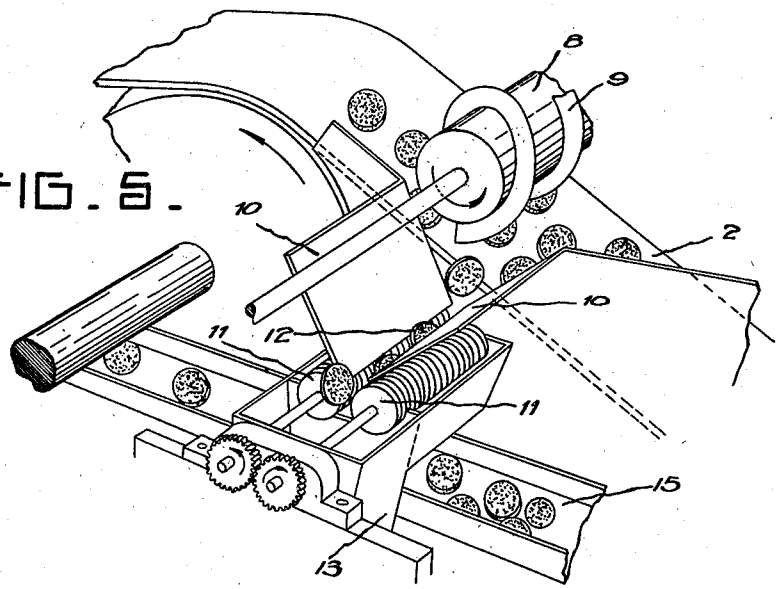

FIG. 8.

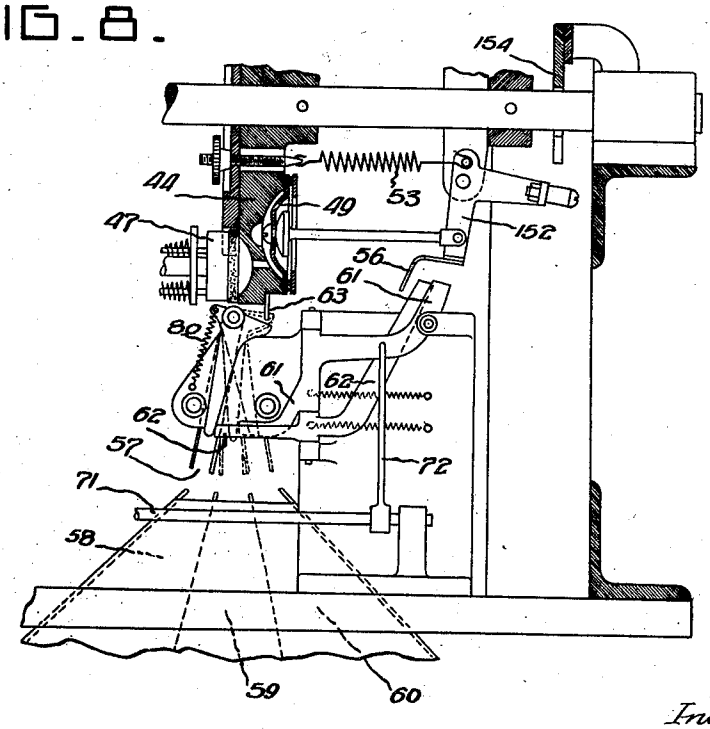

Inventor.
José Vaca Sala.
Cushman Darby & Cushman
Attorneys

Oct. 27, 1936. J. V. SALA 2,059,038

MACHINE FOR SELECTING CORK DISKS

Filed March 14, 1934 7 Sheets-Sheet 6

FIG. 6.

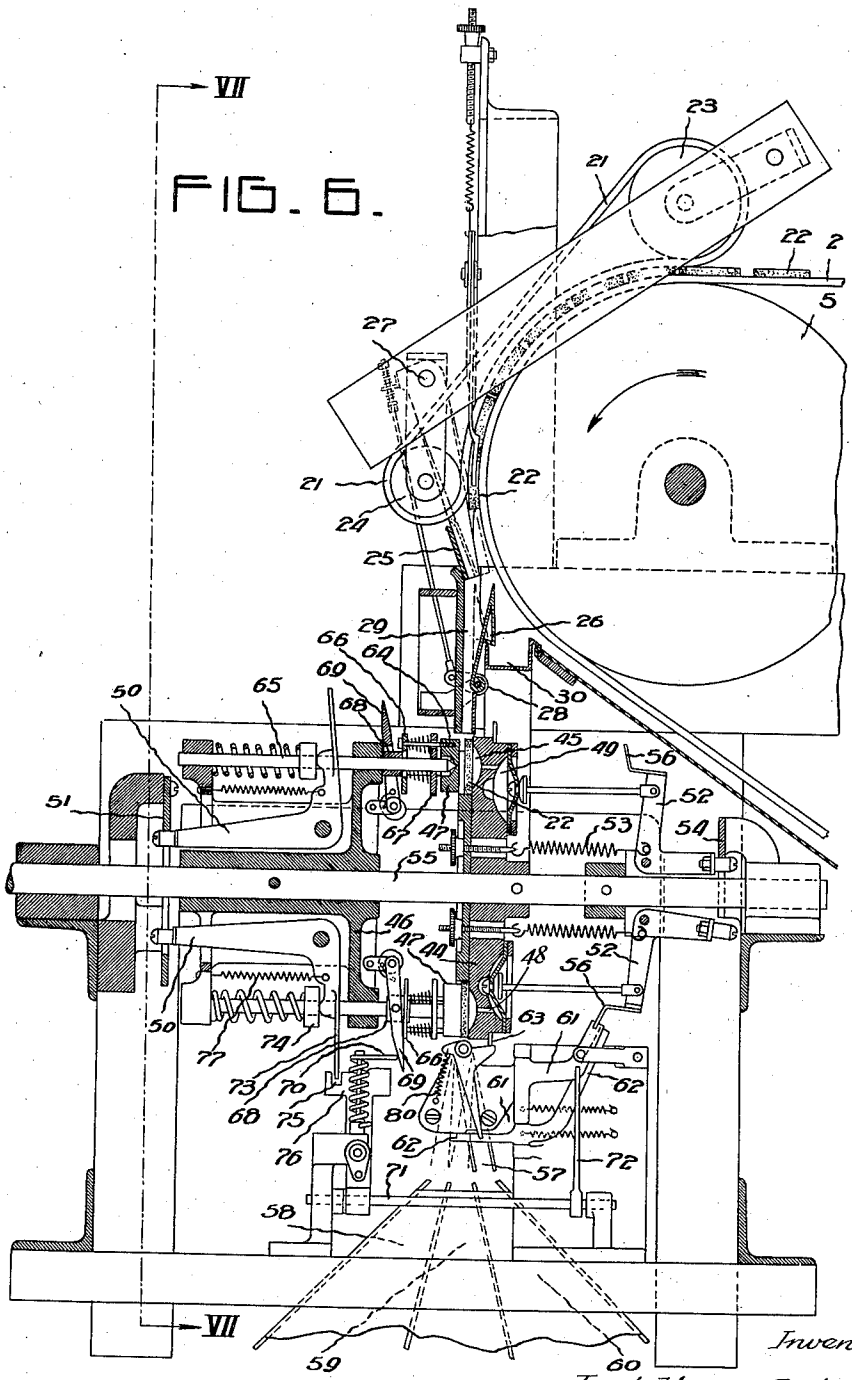

Inventor.
José Vaca Sala.
Cushman Darby & Cushman
Attorneys

Oct. 27, 1936. J. V. SALA 2,059,038

MACHINE FOR SELECTING CORK DISKS

Filed March 14, 1934 7 Sheets-Sheet 7

FIG. 7.

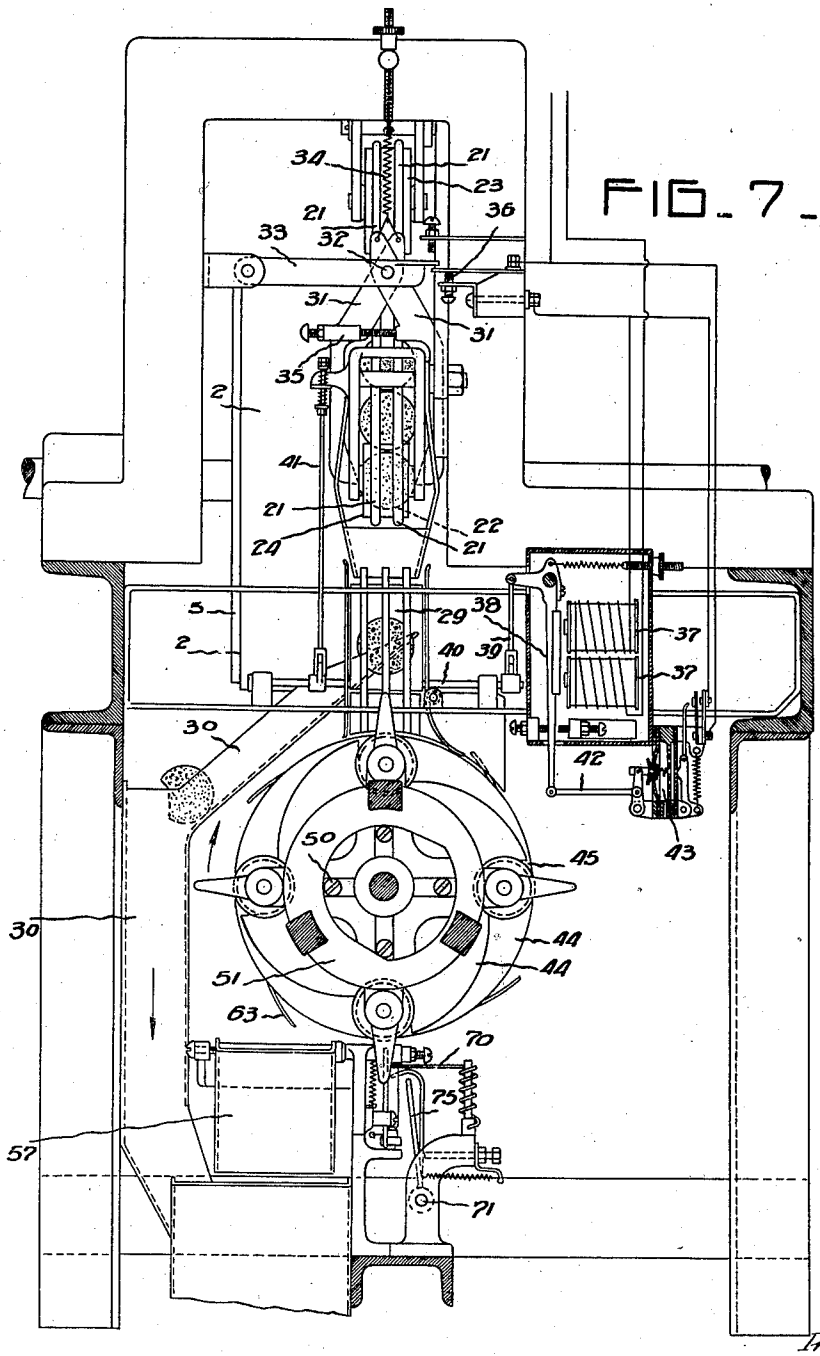

Inventor

José Vaca Sala.

Cushman Darby & Cushman

Attorneys

Patented Oct. 27, 1936 2,059,038

UNITED STATES PATENT OFFICE

2,059,038

MACHINE FOR SELECTING CORK DISKS

José Vaca Sala, Barcelona, Spain, assignor to Hijos De H. A. Bender, S. A., San Feliu de Guixols, Spain, a company of Spain

Application March 14, 1934, Serial No. 715,531
In Spain March 21, 1933

34 Claims. (Cl. 209—75)

The object of this invention is a machine for selecting the disks of cork or other material employed for closing bottles with crown seals or other types of metal caps or stoppers.

The machines which make the cork disks deliver these disks mixed with a large quantity of pieces of cork and in addition there is a high percentage of disks which are incomplete or are defective owing to being too thin or too thick or owing to not having their two faces parallel, or owing to the cork having pores and defects which make the disk useless. This requires that the cork disks be carefully selected in order to separate the pieces and defective disks, which operation is usually carried out by hand and in addition to being slow and costly is extremely tiring.

The machine which is the subject of this invention carries out this operation automatically as it is sufficient to throw the disks in bulk into the hopper of the machine and the machine separates the pieces and incomplete disks and then submits the complete disks to a test by compressed air or vacuum, throwing out as useless the disks which allow the air to pass. At the same time it checks the parallelism of the two faces of the disk and the thickness of the disk, rejecting the defective disks.

The machine includes a transporting mechanism which tak . the disks from the hopper and arranges them until they are in a line, in which state they are delivered to a unitary testing mechanism. The first testing mechanism separates the pieces and the incomplete disks, that is those of a diameter less than the normal; from this mechanism the disks pass to a second testing mechanism in which, they are subjected to air pressure or to a vacuum, there they are tested to see if they have pores which allow the air to pass and at the same time they are tested to determine the thickness of the disk and the parallelism of its two faces.

In the attached drawings there is shown the machine of this invention.

Figure 1 is a front elevation of the whole of the machine in longitudinal section.

Figure 2 is a plan view of the machine.

Figure 3 is a front elevation on a larger scale with some parts in section of the mechanism which sorts and lines the disks.

Figure 4 is a plan view of Figure 3.

Figure 5 is a detail in perspective of this mechanism.

Figure 6 is a vertical section through the axis of the testing mechanisms.

Figure 7 is a front view of these mechanisms in section through the line VII—VII of Figure 6.

Figure 8 is a detail of a modification of the machine in which instead of compressed air there is used a vacuum.

As is seen from the drawings the machine includes a hopper 1 in which the disks are thrown in bulk. The bottom of this hopper is constituted by an endless belt 2 which moves in the direction shown by the arrow, and is driven by the rollers 3, 4 and 5 which draw the disks from the hopper 1 to the testing mechanism which will be subsequently described. On leaving the hopper 1 these disks remain on the belt 2 forming irregular heaps and with the object of distributing these disks in a single row or line, the machine carries just after the hopper 1 a shaft 6 fitted with paddles 7 which on revolving separate the disks from the top of the pile leaving only a layer of disks on the belt. As some disks may escape the action of this wheel 6, 7, there is arranged higher up a cylinder 8 provided with a spiral rib or vane 9 which on revolving separates the disks which might be on top of others and makes them fall by the side of the belt to a channel formed by the two plates 10 (Figures 3, 4 and 5).

The bottom of this channel is formed by two parallel rollers 11 provided with spiral ribs spaced from each other the proper distance so as to correspond with the correct thickness of the disks. The disks or pieces which have a greater thickness, do not pass between the rollers 11 and are drawn sideways owing to the spirals of the said rollers until they fall into a channel or slot 13 which conducts them to a deposit 14. The disks or pieces which have the corresponding thickness or less, pass through the rollers 11 falling on the channel 15 which has a slight inclination and in order to make the disks slide along the channel 15, the latter is driven with a shaping movement by means of an angular lever 17 which in its turn is driven by projections 18 arranged on the lateral face of the roller 5. This channel 15 has holes 15' (Fig. 4) of a lesser diameter than the disks, so that the small or broken pieces, which fall through the holes, are conducted by the funnel 13 to the deposit receptacle 14. On arriving at the end of the channel 15 the proper size disks fall through the aperture 16 on the belt 2.

The disks after having passed by the action of the wheel 8 meet an inclined table 19 which moves them towards one of the edges of the belt 2 to put them in line. As it is possible that by the action of this inclined plane 19 some of the disks may mount on others, near this inclined plane

there is arranged another revolving shaft 20 provided also with a spiral and having on its end two fins 20' which causes to fall into the channel 15 the superfluous disks and those which have mounted on others.

In this manner there is obtained the placing of the disks 22 forming a line in which there is no disk on another and during this movement there is applied on the line of disks two small belts 21 which maintain the disks firmly against the belt 2 at the part where the belt curves around the cylinder 5 and thus singly and sequentially delivers the disks to the testing mechanisms which separate the defective disks from the good ones.

As is seen in more detail in Figures 3 and 6, the small belts 21 which hold the disks firmly on the belt 2 are driven by two rollers 23, 24 and leave the disks at the level of the shaft of the roller 5 that is to say when they are approximately in a vertical plane. At this point the disks 22 meet two deflecting pieces, one of them made up of a channel 25 pivotally supported at 27 to a part of the machine (Fig. 6) and the other constituted by a lever or plane 26 movably connected to the shaft 28.

When these two pieces are in the position shown in full lines in Figure 6, the disk 22 on coming away from the belts 21 falls and is conducted to the vertical channel 29 to be submitted to further tests, whilst when these pieces 25, 26 are in the position shown in dotted lines in Figure 6 the disk falls into the channel 30 which conducts it out of the machine. The guide bars or pieces 25 and 26 are arranged to be selectively actuated during the operation of the machine so as to cause the disks to be either delivered to the channel 29 or channel 30 by suitable electrical means hereinafter described.

At the point in which the belts 21 leave the disk, there is arranged a mechanism which tests the diameter of the disk to separate the pieces and the disks whose diameter is less than the correct one. This mechanism is made up of toggles or jaws 31 pivoted at 32 to the lever 33 and connected at their upper ends to a spring 34 which maintains them normally in a raised and closed position. By means of a graduated stop 35 the separation of these toggles is regulated in such a way that normally their clamping or engaging ends are spaced at a distance slightly less than the correct diameter of the disks 22. The disks 22 are drawn by the belt 2 and the small belts 21 between the lower ends of the toggles 31 and if the diameter of the disk 22 is correct, as this diameter is greater than the separation of the toggles, the advancing disk draws the toggles downwardly overcoming the action of the spring 34. On the other hand dealing with a piece or a disk of a diameter less than the correct one, the disk or piece passes freely through the spaced ends of the toggles without drawing them down. When the toggles 31 descend, the lever 33 also descends and then closes the electric contact 36 connected to an electric magnet 37 whose armature 38 on being attracted by the electro-magnet works through the intermediation of the mechanism 39, 40, 41, operatively connected to the guide members 25, 26, so as to move these members to the position shown in full lines in Figure 6. The armature 38 of the electro-magnet is combined through a connecting rod 42 with a retarding mechanism 43 which causes these pieces 25, 26 to remain in this position during the time necessary for the disk 22 to come loose from the toggles and the small belts 21 and to fall in the channel 29.

From the channel 29 the disk passes to another testing mechanism in which it is tested to determine its permeability by means of compressed air or vacuum to see if the disk closes hermetically.

This unitary mechanism includes a wheel or disk 44 keyed or otherwise secured to a shaft 55 and has in its periphery a convenient number of pockets 45 to receive the disks which go on falling by the channel 29. In front of this wheel 44 and keyed to the shaft 55 there is another wheel 46 which carries for each one of the pockets 45 a small piston or plunger 47 which is applied on the disk and presses it against the borders of the pocket 45. This pocket communicates by means of a duct 48 with a small air pump consisting of a membrane 49 which injects through this duct 48 compressed air to test the permeability or closing air tight qualities of the disk.

The movement of the pistons 47 is carried out by means of the levers 50 driven in their turn by the fixed eccentric 51 in such a way that the same movement of the shaft 55 with the wheels 44, 46, causes the plunger 47 to be reciprocated so as to be applied on the disk 22 and separated from it at predetermined points during the rotation of the wheel 44.

In a similar way the membranes or air pumps 49 are driven by the levers 52 and springs 53. These springs 53 tend to always compress the air by means of the membranes 49 whilst the free end of the levers 52 is driven by means of another fixed eccentric 54 which at the convenient moment leaves them free in order that they may be driven by the springs 53.

The working of this mechanism is as follows:

The disk 22 is introduced in the pocket or slot 45 when this is in the top position, that is to say immediately below the channel 29 and shortly after continuing the rotation of the wheels 44, 46 there is applied against the disk 22 the plunger 47. On doing this whilst the shaft goes on revolving with the wheels, the lever 52 remains free from the eccentric 54 and its spring 53 drives it compressing the air in the pump 49. If the disk closes hermetically, the position of the membrane 49 and the lever 52 hardly varies but if the disk loses, as the wheel goes on turning, the membrane 49 moves towards the left of Figure 6 until it takes up the position shown in the lower part of this figure.

Under the wheel 44 and corresponding to the position in which the piston 47 withdraws from the disk 22 there is a movable channel 57 which can take up the three positions shown in Figure 6 corresponding to three ducts or deposits 58, 59, 60.

This channel 57 is driven or worked on one hand by the spring 80 which tends to place it always in the position shown in Figure 6 by full lines and on the other hand is worked by stops 63 which at every movement of the wheel 44 places it in the position nearer the left where it is retained by the latch 62 so as to align with the compartment 58. In addition there is another similar latch 61 which serves as a stop or retention piece for the intermediate position of the channel 57 corresponding to the intermediate deposit 59.

Each one of the levers 52 has an attachment or extension 56 arranged in combination with the latches 61, 62 in such a way that wher the disk

does not let the air escape and consequently the membrane remains in the position towards the right, the extension 56 does not touch either of the two latches and consequently the channel 57 remains in its position towards the left and conducts the disk to the deposit 58 corresponding to the good disks. If the disk allows a small quantity of air to escape the extension 56 works the latch 62 and then the chanel 57 remains in the intermediate position in front of the deposit 59 to which the disks of inferior or doubtful quality go.

If the disk allows the air to escape completely and the membrane remains in the position shown in the lower part of Figure 6 then the extension 56 works the latch 61 and the swinging channel 57 takes the position corresponding with the compartment or receptacle 60 to which the defective disks go.

This mechanism may be combined also in such a way that the testing of the disks is not made by air pressure but by vacuum. This variation is shown in Figure 8. In this case the lever 152 and the eccentric 154 have the necessary arrangement for the spring 53 to work the membrane 49 in the sense of producing an aspiration or vacuum.

The mechanism described tests at the same time whether the two faces of the disks are parallel. To this end each of the plungers 47 rest solely on the point 64 of the stem 65 in such a way that it may oscillate around the same and be joined to a crown or ring 66 which by means of springs rests against another ring 67 forming part of the stem 65. In combination with this, there is arranged on the shaft 65 a sliding sleeve 68 forming part of an arm 69 which on arriving at the lower part, contacts with a spring 70 which forms an inclined elastic plane and pushes the sleeve 68 towards the plunger 47. When the two faces of the disk are parallel one to another, the plunger 47 is conveniently applied on the disk and the ring 66 remains well centered on the stem 65 in such a way that it allows the passage of the sleeve 68 into the ring 66 as is shown in the lower part of Figure 6, but if the two faces of the disk are not parallel, the ring 66 remains tilted by the inclination of the plunger 47 and then the sleeve 68 cannot penetrate within this ring. The consequence of this is that the arm 69 remains in the position shown in the top part of Figure 6, and meets with the piece 76 fixed to the shaft 71 which by means of the connection of shaft 71 with arm 72 works the pawls 61 and 62 and places the channel 57 in the position at the right corresponding to the deposit 60 of the defective disks.

This same mechanism tests the thickness of the disks separating the defective ones for being either thicker or thinner than they should be. To this end each lever 50 is worked by a small spring 77 which keeps it applied against the ring 74 forming part of the shaft 65 and the end of the lever carries a stem or extension 73. When the disk being tested is of normal thickness, this stem 73 passes freely through the groove 75 of the piece 76 but if the disk is too thick or too thin the stem 73 engages the piece 76 so as to cause the latter to move therewith, this movement actuates the channel or gate 57 through the links 71, 72 and their associated parts, so as to move the channel into alignment with the compartment 60 that receives the defective disk.

It will be observed that I provide a substantially unitary mechanism which serves to direct or convey the disk through a predetermined course and substantially simultaneously, i. e., while being so directed or arranged and by a substantially unitary mechanism subject the disc to the predetermined test. Thereafter the disks are separated in response to this test. By "unitary mechanism" and "substantially simultaneously" as used in the specification and claims, I mean to distinguish from a series of independent mechanisms through which the discs might be separately passed.

It will be seen therefore that this machine submits the disks to different tests regarding diameter, thickness, parallelism of its faces, the presence of pores allowing the air to pass, etc. and carries out a much more exact and careful work than could be done by hand in the usual way.

I claim:—

1. In a machine for sorting disks, means for separating undersized disks and pieces of disk from disks of the proper size, and a testing device for receiving the disks of proper size, said testing device including air pressure means for determining the permeability of the disks, means for determining the thickness of the disks and parallelism of the faces of the disks, said means for determining the permeability, thickness and parallelism of the disks being operable substantially simultaneously on each of the disks.

2. In a machine for sorting disks, a conveyor for conducting the disk through the machine, means for arranging the disks in a layer on the conveyor, a testing device for receiving the disks, spaced belts for transferring the disks from the conveyor to the testing device, means in advance of the testing device for separating undersized disks and pieces of disks from disks of the proper size, said testing device having air pressure means for determining the permeability of the disks, means for determining the thickness of the disk, and means for determining the parallelism of the faces of the disk.

3. In a machine for sorting disks, means for conducting the disks through the machine, movable spaced jaw members, yieldable means normally maintaining said jaw members in their raised position, the space between said jaw members normally being slightly less than the correct size of the disks so as to be in the path thereof as the disks pass through the machine, means for conducting undersized disks and pieces of disks that pass uninterruptedly between the jaw members from the machine, a testing device for receiving the proper size disks, a movable guide for conducting the disks from the jaw members to the testing device, and means operable by the jaw members for moving the guide in alignment with the testing device to deliver disks of the proper size thereto.

4. In a machine for sorting disks, means for separating undersized disks and pieces of disks from disks of the proper size, a testing device for receiving the disks of proper size, said testing device including a revoluble member having spaced cavities for receiving the disks, each of said cavities having air pressure means associated therewith for determining the permeability of the disks, receptacles for receiving the disks as they issue from the testing device, a movable guide associated with the testing device for conducting the disks to said receptacles, and means operatively connecting said air pressure means to the movable guide whereby the disks are deposited into one of the receptacles in accordance with their degree of permeability as determined by said testing device.

5. In a machine for sorting disks, means for separating undersized disks and pieces of disks from disks of the proper size, a testing device for receiving the disks of proper size, said testing device including a revoluble member having spaced cavities for receiving the disks, each of said cavities having associated therewith a tiltable member arranged to be applied to the disks for determining the parallelism of the faces of the disks, receptacles for receiving the disks as they issue from the testing device, a movable guide member associated with the testing device for conducting the disks to said receptacles, and means operatively connecting said tiltable member to said guide member, whereby the disks are deposited into one of the receptacles in accordance with the parallelism of their faces as determined by said testing device.

6. In a machine for sorting disks, conveying means for receiving and carrying the disks through a predetermined course, and means associated with the conveying means for substantially simultaneously determining the premeability of the disks, parallelism of the faces of the disks and the relative thickness of the discs, said means including mechanism for operating on the opposite sides of the disk.

7. In a machine for sorting disks, testing mechanism for separating the disks in accordance with their degree of perfection, said testing mechanism including means for receiving the disks, and means associated with the receiving means for substantially simultaneously determining the permeability of the disks and the parallelism of the faces of the disks, said means including mechanism operating on opposite sides of the disk.

8. In a machine for sorting disks, testing mechanism for separating the disks in accordance with their degree of perfection, said testing mechanism including means for receiving the disks, and means associated with the receiving means for substantially simultaneously determining the permeability of the disks and thickness of the disks, said means including mechanism operating on the same side of the disk.

9. In a machine for sorting disks, testing mechanism for separating the disks in accordance with their degree of perfection, said testing mechanism including means for receiving the disks, and means associated with the receiving means for substantially simultaneously determining the parallelism of the faces of the disks and the relative thickness of the disks, said means including mechanism operating on the same side of the disk.

10. In a machine for sorting disks, testing means for separating the disks in accordance with their degree of perfection, means in advance of said testing means for conducting undersized disks and pieces of disks from the machine and delivering disks of the proper size to the testing means, said testing means having pockets for receiving the disks, and means associated with each pocket for determining the permeability of the disks therein, parallelism of the faces of the disks, and the relative thickness of the disks.

11. In a machine for sorting disks, testing means for separating the disks, said testing means having pockets for receiving the disks, means delivering the disks to the pockets, and means associated with each pocket for determining the permeability of the disks therein, parallelism of the faces of the disks, and the relative thickness of the disks, receptacles for receiving the disks as they issue from the testing means, and a guide member operatively associated with the testing means for conducting the disks to one of the receptacles in accordance with the degree of perfection of the disks as determined by said testing means.

12. A machine for sorting disks having in combination, testing mechanism, a conveyor for receiving the disks indiscriminately placed thereon, said disks and mechanism having means for receiving the disks, means for singly feeding the disks into the receiving means, a movable member having a tiltable portion arranged to engage the disks in the receiving means, means associated with said movable member for determining the parallelism of the faces of the disks, and means operable by the movable member for determining the thickness of the disks.

13. A machine for sorting disks having in combination, testing mechanism, a conveyor for receiving the disks indiscriminately placed thereon, means for feeding the disks to the testing mechanism, said testing mechanism having means singly receiving the disks, a movable member associated with the receiving means and having a tiltable portion arranged to engage the disks, means associated with said movable member for determining the parallelism of the faces of the disks, and means operable by said movable member for determining the thickness of the disks, receptacles for receiving the disks as they issue from the testing mechanism, and a guide member operatively connected to the testing mechanism for delivering the disks to one of the receptacles in accordance with the degree of perfection of the disks as determined by the testing mechanism.

14. In a machine for sorting disks, a conveyor for receiving the disks indiscriminately placed thereon, a revoluble blade member associated with the conveyor for arranging the disks in a layer on the conveyor, movable means operating transversely to the conveyor for withdrawing any superposed disks that escape the action of said blade member and returning them to the conveyor, and longitudinal reciprocating means associated with said last mentioned means for separating the oversized and undersized disks from the proper sized disks before the latter are returned to the conveyor.

15. In a machine for sorting disks, a conveyor for receiving the disks indiscriminately placed thereon, a revoluble blade member associated with the conveyor for arranging the disks in a layer on the conveyor, means for withdrawing any superposed disks that escape the action of said blade member and returning them to the conveyor, said last mentioned means including a trough arranged to receive the discharged disks, said trough having parallel rollers spaced the proper thickness of the disks whereby disks of less than predetermined size fall between the rollers, and a reciprocating channel member for receiving the disks that fall between the rollers for returning the latter to the conveyor, said channel member having openings of less diameter than the proper diameter of the disks are withdrawn from the machine.

16. In a machine for sorting disks, a conveyor for receiving the disks indiscriminately placed thereon, a revoluble blade member associated with the conveyor for arranging the disks in a layer on the conveyor, means for withdrawing any superposed disks that escape the action of said blade member and returning them to the conveyor, and means associated with said last

mentioned means for separating the oversized disks from the proper sized disks before the latter are returned to the conveyor, testing mechanism for receiving the disks as they issue from the conveyor, said testing mechanism including means for receiving the disks, means associated with the receiving means for determining the permeability of the disks, parallelism of the faces of the disks and the thickness of the disks.

17. In combination with a machine for sorting disks, a testing device, a conveyor for receiving the disks indiscriminately placed thereon, means for arranging the disks in a layer on the conveyor, means for singly conducting the disks from the conveyor to the testing device, means at the discharge end of the conveyor for maintaining the disks in proper position during the transfer operation, said testing device having pockets for receiving the disks, means for withdrawing undersized disks and pieces of disks from the machine and delivering disks of the proper size singly to the pockets, means associated with each pocket for determining the permeability of the disks, parallelism of the bases of the disks and the thickness of the disks, receptacles for receiving the disks, and means operatively connected to the testing device for conducting the disks to one of the receptacles in accordance with the degree of perfection of the disks as revealed by the test.

18. In a machine for sorting disks, a testing device including spaced movable members, one of said members having means for receiving the disks to be tested, means associated with said receiving means for determining the permeability of the disks, the other of said members having a movable element associated with the receiving means for maintaining the disks in position, and means operatively connected to said movable element for determining the parallelism of the opposed face of the disks.

19. In a machine for sorting disks, a testing device including spaced movable members, one of said members having means for receiving the disks to be tested, means associated with said receiving means for determining the permeability of the disks, the other of said members having a movable element associated with the receiving means for maintaining the disks in position, and means operatively connected to said movable element for determining the parallelism of the opposed faces of the disks.

20. In a machine for sorting disks, a testing device comprising spaced movable members, one of said members having means for receiving the disks to be tested, air pressure means associated with said means for determining the permeability of the disks, the other of said members having reciprocating elements associated with said means for maintaining the disks in position, and means operatively connected to each reciprocating element for determining the parallelism of the opposed faces of the disks.

21. In a machine for sorting disks, a testing device comprising axially aligned revoluble members, one of said members having means for singly receiving the disks to be tested, air pressure means associated with the receiving means for determining the permeability of the disks, the other of said revoluble members having reciprocating elements associated with the pockets for maintaining the disks in position, and means operatively connected to each reciprocating element for determining the thickness of the disks.

22. In a machine for sorting disks, a testing device comprising spaced revoluble members, one of said members having means for singly receiving the disks to be tested, air pressure means associated with each pocket for determining the permeability of the disks, the other of said revoluble members having reciprocating elements associated with the receiving means for maintaining the disks in position, and means operatively connected to each reciprocating element for determining the parallelism of the opposed faces of the disk and the thickness of the disk.

23. In a machine for sorting disks, a conveyor for receiving the disks indiscriminately placed thereon, means for arranging the disks in a layer on the conveyor, a testing device for receiving the disks as they issue from the conveyor, means for singly conducting the disks to the testing device, means adjacent the discharge end of the conveyor for engaging the disks to insure their proper transfer to the testing device, and testing mechanism for receiving the disks as they issue from the conveyor, said testing mechanism having means for singly receiving the disks, and means associated with the receiving means for determining the permeability of the disks, parallelism of the faces of the disks and the relative thickness of the disks.

24. A machine for sorting disks having in combination, a testing mechanism for complete disks, means delivering the disks to the testing mechanism, toggle means having spaced jaws arranged to engage disks of normal diameters and allow disks of smaller diameters and incomplete disks to pass, yieldable means for normally maintaining the jaws closed, and means operatively associated with the toggles for causing the opening of the jaws to permit the disks of proper diameters to be delivered to the testing mechanism, and means for withdrawing the other disks from the machine.

25. A machine for sorting disks having in combination, testing mechanism for complete disks, a conveyor for receiving the disks indiscriminately placed thereon, means for arranging the disks in a layer on the conveyor and singly feeding the disks to the testing mechanism, means as the disks issue from the conveyor for separating the complete disks from the incomplete disks and delivering the complete disks to the testing mechanism, said testing mechanism having a revoluble member provided with pockets for receiving the disks, means operatively associated with each pocket for determining the degree of perfection of the physical characteristics of the disks, receptacles for receiving the disks as they issue from the testing mechanism, a movable gate arranged to align selectively with the receptacles, and means operatively associated with the testing mechanism and said gate for moving the gate into alignment with one of the receptacles so as to discharge the disks therein depending upon the degree of perfection of the disks.

26. A machine for sorting disks having in combination, testing mechanism for complete disks, a conveyor for receiving the disks indiscriminately placed thereon, means for arranging the disks in a layer on the conveyor and singly feeding the disks to the testing mechanism, means as the disks issue from the conveyor for separating the complete disks from the incomplete disks and delivering the complete disks to the testing mechanism, said testing mechanism having a revoluble member provided with pockets for receiving the disks, means associated with each pocket for determining the permeability of the

disks, means associated with each pocket for determining the parallelism of the faces of the disks, means associated with each pocket for determining the thickness of the disks, receptacles for receiving the perfect and defective disks, a movable gate arranged to align with the receptacles and receive the disks as they issue from the testing mechanism, and means operatively connecting the testing mechanism to said gate whereby to move the latter into alignment with one of the receptacles in accordance with the degree of perfection of the disks as revealed by the test so that the disks are discharged into the proper receptacle.

27. A disk testing device of the class described including a revoluble member having a pocket for receiving the disk to be tested, means for actuating said member, a reciprocating plunger arranged to align with the pocket for maintaining the disk in engagement therewith, a movable pressure pump communicating with the pocket and coacting with the plunger for determining the permeability of the disks, receptacles for receiving the disks when they leave the revoluble member, a gate arranged to align selectively with the receptacles, and means operatively connecting the gate with the testing mechanism whereby said disk as it issues from the testing mechanism is deposited in one of the receptacles in accordance with the degree of perfection of the disk as determined by the test.

28. A disk testing device of the class described including a revoluble member having a pocket for receiving the disk to be tested, means for actuating said member, a reciprocating plunger arranged to align with the pocket for maintaining the disk in engagement therewith, means operatively associated with the plunger for determining the parallelism of the faces of the disks, receptacles for receiving the disks when they leave the revoluble member, a gate arranged to align selectively with the receptacles, means operatively connecting the gate with the testing mechanism whereby each disk as it issues from the testing mechanism is deposited in one of the receptacles in accordance with the degree of perfection of the disk as determined by the test.

29. A disk testing device of the class described including a revoluble member having a pocket for receiving the disk to be tested, means for actuating said member, a reciprocating plunger arranged to align with the pocket for maintaining the disk in engagement therewith, means operatively associated with the plunger for determining the thickness of the disks, receptacles for receiving the disks when they leave the revoluble member, a gate arranged to align selectively with the receptacles, means operatively connecting the gate with the testing mechanism whereby each disk as it issues from the testing mechanism is deposited in one of the receptacles in accordance with the degree of perfection of the disk as determined by the test.

30. A machine for sorting disks having in combination a testing device, means associated with said testing device for separating undersized disks and pieces of disks from disks of the proper size, means for singly conducting the disks of proper size to the testing device, and independently operable means associated with the testing device for substantially simultaneously determining the permeability of the disks and the parallelism of the faces of the disk.

31. A machine for sorting disks having in combination a testing device, means associated with said testing device for separating undersized disks and pieces of disks from disks of the proper size, means for singly conducting the disks of proper size to the testing device, and independently operable means associated with the testing device for substantially simultaneously determining the permeability of the disks and the thickness of the faces of the disks.

32. A machine for sorting disks having in combination a testing device, means associated with said testing device for separating undersized disks and pieces of disks from disks of the proper size, means for conducting the disks of proper size to the testing device, and independently operable means associated with the testing device for substantially simultaneously determining the thickness of the disks and the parallelism of the faces of the disks.

33. A machine for sorting disks having in combination a testing device, means in advance of said testing device for separating undersized disks and pieces of disks from disks of the proper size, means for successively conducting the disks of proper size to the testing device, independently operable means associated with the testing device for substantially simultaneously determining the permeability of the disks, parallelism of the faces of the disks and the relative thickness of the disks, receptacles for receiving the disks as they issue from the testing device, and a guide member operatively associated with the testing device for conducting the disks into one of the receptacles in accordance with the degree of perfection of the disks as determined by the testing device.

34. In a machine for sorting disks, a conveyor for receiving the disks indiscriminately placed thereon, means for conveying the disks in a layer on the conveyor, a testing device beneath said conveyor, means coacting with the end of the conveyor for singly conducting the disks to the testing device, means associated with said last mentioned means for conducting undersized disks and pieces of disks from the machine, receptacles for receiving the disks as they issue from the testing device, and means for conducting the disks to one of the receptacles in accordance with the degree of perfection of the disks as determined by said testing device.

JOSÉ VACA SALA.