March 15, 1938. E. D. BLODGETT 2,110,852

RADIO DIRECTION FINDER

Filed Dec. 31, 1935

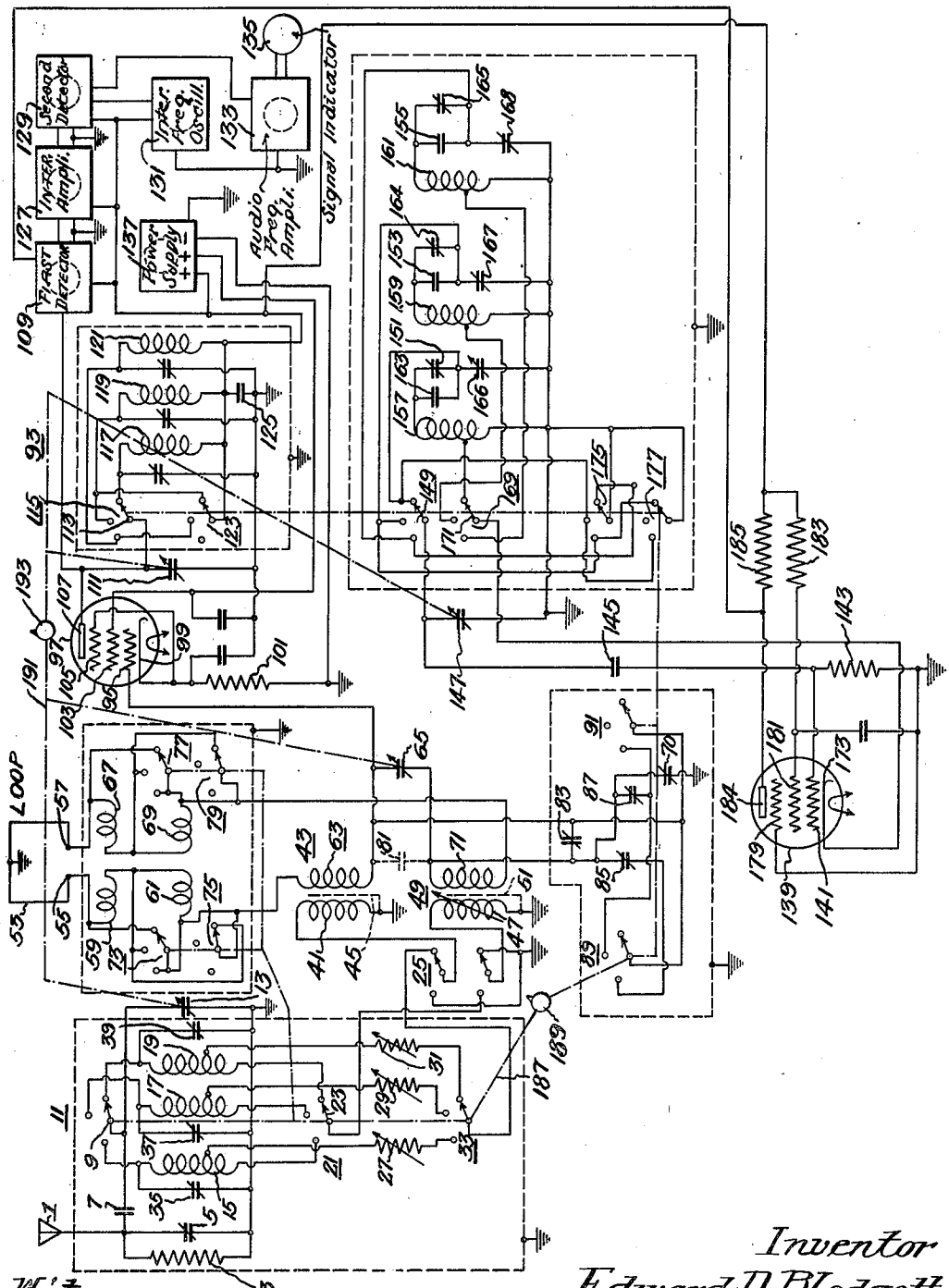

Witnesses:
C. D. Tuska
George C. Jepson

Inventor
Edward D. Blodgett
by J. R. Goldsborough
Attorney.

Patented Mar. 15, 1938 2,110,852

UNITED STATES PATENT OFFICE

2,110,852

RADIO DIRECTION FINDER

Edward D. Blodgett, Haddonfield, N. J., assignor to Radio Corporation of America, a corporation of Delaware

Application December 31, 1935, Serial No. 56,861

5 Claims. (Cl. 250—11)

My invention relates to radio direction finders. More specifically, my invention is a multi-frequency range radio direction finder in which a plurality of inductors are arranged for tuning with single variable capacitors. A suitable multi-pole, multi-position switch is used to simultaneously connect the several inductors of a frequency range to their respective tuning capacitors.

It has been the practice to tune the antenna of a radio direction finder system with a variable inductor when the system is used for determining the "sense" of direction. The loop may be resonated by a variable capacitor and is rotated for determining the "bearing" with the antenna detuned. There are several drawbacks to the variable inductor tuning: one, it is bulky; two, it is expensive; three, the inductor does not track with a variable capacitor; four, a multiplicity of variable inductors is required in a multi-range instrument; and five, the impedance characteristic is not suited to the balance of the system.

I propose to overcome these difficulties and to gain certain advantages in performance by the novel means and arrangement I am about to disclose. One of the objects of my invention is embodied in the design of a multi-frequency range radio direction finder.

Another object is in an arrangement in which all of the tuning is effected by variable capacitors.

A further object is in the novel switching and detuning means which are embodied in my invention.

A still further object is in the design of a direction finder system in which the impedance characteristic of the antenna system is suitably related to the associated circuits and apparatus.

Additional objects will appear in the accompanying specification, claims and drawing to which reference is made for a proper understanding of my invention.

An antenna 1 is connected through a resistor 3 to ground. A trimmer capacitor 5 is connected across the resistor 3. A small capacitor 7 couples the antenna to the movable contactor 9 of the switch section 11, and to the stator of tuning capacitor 13. The rotor of this capacitor is grounded.

Three inductors 15, 17, and 19 of suitable inductance values are connected to the fixed terminals of the switch section 11, and to the fixed terminals of a second switch section 21. The movable contact member 23 of this switch section 21 is connected to the lower left hand terminal of a double pole, double throw switch 25. The upper left hand and lower right hand terminal of the switch 25 are connected to ground.

Each of the three inductors 15, 17 and 19 are tapped intermediate their ends. The taps of each inductor are connected through suitable variable resistors 27, 29, 31 to the fixed terminals of a third switch section 33. The movable contact element of this switch section 33 is connected to the upper right hand terminal of the double pole, double throw switch 25. Trimmer capacitors 35, 37, 39 are connected, respectively, between the upper terminal of each of the inductors 15, 17, 19 and ground.

The portions of the inductors between their upper ends and the taps are chosen so that each may be tuned throughout the required frequency range by the single variable capacitor 13. The portion below the tap is chosen to have the required detuning effect when the receiver is operated on "bearing" balance as will be described below. The several resistors are of such values as will give the required broadness of tuning of the antenna circuit.

The upper movable blade of the double pole, double throw switch is connected to the primary 41 of a "sense" transformer 43. The primary winding is grounded and suitably shielded from its secondary by a shield 45. The lower movable blade of the double pole, double throw switch 25 is connected to the primary 47 of a "balance" or "bearing" transformer 49. The primary is grounded and shielded from its secondary by a conductor 51. The coupling between the primary 47 and the secondary is variable.

The loop circuit consists of the loop 53. The terminals of the loop are connected to terminals 55—57. One of these terminals 55 is connected to the serially connected loading coils 59, 61. The lower coil is connected to the secondary 63 of transformer 43. The remaining terminal of the secondary is connected to the variable capacitor 65 and to the grid 95 of radio frequency amplifier 97.

The remaining terminal of the loop circuit 57 is connected to the connected loading coils 67, 69. The lower coil 69 is connected to the secondary 71 of the "balance" transformer 49. The upper terminal of this secondary 71 is connected to the remaining terminal of the variable tuning capacitor 65. A small trimmer capacitor 73 is connected between the tuning capacitor and ground to balance the grid-cathode capacitor of the radio frequency amplifier tube 97.

The several frequency ranges of the loop circuit are obtained by selectively varying the in-

ductance included in the loop circuit. One method of varying the inductance is to use both loading coils on each side of the loop circuit in series, using one and shorting the other load coil on each side of the loop circuit, or shorting both loading coils on each side of the loop circuit. The switching just described, is accomplished by four sections of three-way switches, 73, 75, 77, 79.

In ordinary practice, it is desirable to employ trimmer capacitors to line up the several tuning ranges of the loop circuit. One trimmer capacitor 81 is connected across the loop circuit. Three additional trimmer capacitors 83, 85, 87 are suitably connected by a pair of switch sections 89—91 so that each frequency range is provided with a trimmer capacitor. It should be understood that the trimmer capacitors in the antenna, loop, and other circuits of this application are for alignment at the high frequency ends of each tuning range. The main variable tuning capacitor 65 of the loop circuit does not employ a grounded rotor.

Although numerous arrangements of amplifier and detector circuits may be connected to the loop circuit, I prefer a superheterodyne preceded by a radio frequency amplifier. The radio frequency stage is represented by the numeral 93. The control grid 95 of a radio frequency amplifier tube 97 is connected to one terminal of the variable tuning capacitor 65. The cathode 99 is connected through a self-biasing resistor 101 to ground. This resistor may be by-passed. The screen grid 103 is connected to a source of positive biasing potential. A suppressor grid 105 is shown connected to the cathode 99.

The anode 107 of radio frequency amplifier tube 97 is connected through suitable coupling means to the first detector 109. The anode is also connected to a variable tuning capacitor 111. The rotor of this capacitor is preferably grounded. The anode is also connected to the movable contact 113 of a switch section 115. The three fixed contacts of this switch section 115 are connected to three inductors 117, 119, 121. The lower terminals of these inductors are connected to each other and to the movable contact of a switch section 123. The fixed contacts of this switch section 123 are connected to the inductors so that an inductor not in use, but whose natural frequency falls within the tuning range in use, may be short circuited to avoid undesirable coupling effects.

Each of these inductors may be shunted with a trimmer capacitor for alignment at the high frequency ends of their tuning ranges. The common terminal of these conductors is connected through a bypass capacitor 125 to ground and to a positive terminal of the B supply circuit.

The radio frequency amplifier 93 is coupled to the first detector 109, as explained above. The first detector 109 is coupled to an intermediate frequency amplifier 127 through suitable intermediate frequency transformers or the like. The output of the intermediate frequency amplifier 127 is impressed on the second detector 129. A local intermediate frequency oscillator 131 may be used for heterodyne reception. The output of the second detector 129 may be amplified by a suitable audio frequency amplifier 133. The output of this amplifier is represented by the numeral 135 which may be telephone receivers, meters or the like. The power supply for the heaters, biases, screen grids and anodes is represented by the numeral 137. The foregoing elements are so well known to those skilled in the art, and not being a part of my invention per se, have not been shown.

The first detector 109 is supplied with local oscillatory currents which combine or mix with the incoming signal representing currents to form intermediate frequency currents. The local oscillations are generated in the conventional manner by a thermionic tube 139. The control grid 141 of this tube is connected through grid leak resistor 143 to ground, and through grid capacitor 145 to the stator of a variable tuning capacitor 147. The rotor of this capacitor is grounded.

The stator of the tuning capacitor 147 is connected to the movable element of a switch section 149. The fixed switch contacts are, respectively, connected through oscillator padding capacitors 151, 153, 155 to the upper terminals of inductors 157, 159, 161. The padding capacitors 157, 159, and 161 may be shunted with trimmer capacitors 163, 164, and 165. The lower terminals of the three inductors 157, 159, 161 are connected to ground. Trimmer capacitors 166, 167, 168 are connected from the fixed contacts of switch section 149 to ground.

Taps intermediate the ends of the inductors 157, 159, 161 are connected to the fixed contacts of a switch section 169. The movable contact 171 of this switch section is connected to the cathode 173 of the oscillator tube 139. Two switch sections 175, 177 are suitably connected to the oscillator inductors so that an unused inductor, whose natural frequency of oscillation would fall within the range of the inductor in use, may be short circuited to avoid the deleterious effects of coupling between circuits tuned to the same frequency.

The suppressor grid 179 of the oscillator tube 139 is connected to ground. The screen grid 181 is connected through resistor 183 to a suitable positive biasing potential. The anode 184 of the oscillator is connected to a screen grid electrode in the first detector 109. The positive potential for the anode is derived through a resistor 185.

The several switch sections which are employed in the antenna, loops, radio frequency amplifier, and local oscillator circuits are connected by a common shaft 187. A single control knob 189 connected to the common shaft may be used to simultaneously operate all the switch sections. The rotors of the variable tuning capacitors in the antenna, loop, radio frequency, and local oscillator are likewise mounted on a common shaft 191. A single control knob 193 connected to the shaft 191 simultaneously varies the several rotors for tuning to resonance.

Having described one embodiment of my invention, I shall now describe the operation. It should be understood that the frequency range of a direction finder is determined by the frequency of the transmitters whose direction is to be determined. The receiver frequency band having been determined for a particular transmitter, the double pole, double throw switch 25 is first turned to the left. In this position, the primary of the "sense" transformer 43 is grounded. The inductor of the required frequency range is connected with its maximum inductance in the antenna circuit. This detunes the antenna and eliminates the effect of the "sense" direction through the ungrounded transformer 49.

The frequency knob 193 is varied until the receiver including the loop circuit, is tuned to resonance with the incoming signal. The loop circuit being symmetrically arranged, has a sensi-

tivity characteristic of a figure 8 with respect to the magnetic field radiated by the transmitter under observation. The loop is rotated about its vertical axis until a minimum or null signal response is obtained. The position of minimum response is that in which the plane of the loop is normal to the direction of the transmitter. The bearing of the transmitter is obviously on a line at right angles to the plane of the loop.

Thus having determined the bearing, it is now desirable to determine the sense of direction of the transmitter. The double pole, double throw switch 25 is now thrown toward the right. In this position, the primary of the "bearing" or "balance" transformer 49 is grounded. The antenna circuit is completed through the proper resistor to the tap on the inductor. The tap insures that the antenna circuit, already tuned by the capacitor is resonant to the required frequency. The resistor insures that the resonant point of the antenna is not too sharp for suitable tracking with the other tuned circuits, and that the proper amount of energy is fed to the loop circuit. The double throw, double pole switch connects the antenna circuit to the loop circuit through the "sense" transformer 43.

The loop may now be rotated about its vertical axis to indicate the "sense" of the direction of the transmitter. That is, the maximum signal will indicate that the transmitter lies along the previously determined bearing, and in the direction of the maximum response. The position of maximum response for a given installation may be determined with respect to a known side of the loop by calibration with respect to stations of known directions.

As previously indicated, the use of a variable inductor in the antenna circuit is not desirable because the tracking characteristic of a variable inductance and a circuit tuned with an ordinary variable capacitor are far from similar. With capacitors having similar rates of variation in the several tunable circuits, inductors of the properly related values may be used to insure substantially perfect tracking.

When the switches are in position for the balance or bearing indication, the antenna circuit is preferably tuned to a frequency about 15% lower than the incoming signal frequency. This detuning provides the required phase relation between antenna and loop circuit currents. It should be understood that by appropriate changes the antenna inductors could be tuned to frequencies 15% higher instead of lower. These percentages are given merely by way of example as the exact percentage will depend upon the characteristics of the circuits employed.

When operating the "sense" indication, the resistors serve two purposes: one, broadening the resonant point; two, controlling the amplitude of the currents of the antenna circuit. Normally, the ratio of antenna energy to loop energy required for the bearing balance is greater at the high frequency end of a range of frequencies than at the low frequency end of the range.

Since the effective height of the loop increases with increasing frequency more rapidly than the effective height of the antenna, it is desirable to increase the transfer of energy from the antenna circuit to the loop circuit at the higher frequencies in a given band to maintain a substantially uniform ratio of "balance" energy throughout the band. By the proper choice of inductor and trimmer capacitor values, the detuning for resonance is made less at the high frequency end of the band than at the low frequency end. This adjustment will give the required energy ratios.

By way of example, I have found a direction finder embodying the following frequency bands or ranges very useful in practice: A range 1500 to 540 kilocycles, B range 600 to 225 kilocycles, and C range 250 to 100 kilocycles. It should be understood that more or less frequency ranges may be employed. Likewise, a greater or lesser range of frequencies within a given band may be used.

I do not limit my invention to the precise switching means shown which is merely illustrative. The several inductors may be separately shielded, separately trimmed, and switched into or out of the circuits as a whole. Although it is usually more convenient to operate a single knob to switch to any of the frequency bands, separate switching in the several circuits may be employed.

Numerous modifications within the scope of my invention will occur to those skilled in the art. My invention is not to be limited to the precise embodiment shown and described, but is only limited as required by the prior art and appended claims.

I claim as my invention:

1. In a radio direction finder, a tunable loop circuit comprising a fixed loop inductor and variable capacitor, a tunable antenna circuit comprising an inductor and variable capacitor, a pair of transformers connecting said loop and antenna circuits, means for simultaneously varying said variable capacitors, means for changing the value of said inductor thereby detuning said antenna circuit and means for coupling through one of said transformers for determining the bearing of a transmitter by balancing the currents created by the radiation of said transmitter in said loop circuit, means for regulating the energy transferred from said antenna circuit and means for coupling through the other of said transformers for determining the sense of direction of said transmitter, and means for short circuiting the primary of the transformer which is not in use when either bearing or sense directions are being determined.

2. In a multi-frequency range radio direction finder, a tunable loop circuit comprising a fixed loop inductor, a variable capacitor, and a plurality of loading inductors; means for selectively switching said loading inductors with respect to said loop circuit; tunable antenna circuit comprising a plurality of loading inductors and a variable capacitor; means for selectively switching said loading inductors with respect to said antenna circuit; a common control for said variable capacitors; a second common control for said switching means; a "sense" transformer having its secondary in said loop circuit; a "balance" transformer having its secondary in said loop circuit; means for detuning said antenna circuit during bearing determination; means for tuning said antenna circuit during sense of direction determination; means for substantially eliminating the effect of said "sense" transformer during bearing determination, and means for substantially eliminating the effect of said "balance" transformer during sense of direction determination.

3. In a multi-frequency range radio direction finder, a tunable loop circuit comprising a fixed loop inductor, a variable capacitor, and a plurality of loading inductors; means for selectively switching said loading inductors with respect to said loop circuit; tunable antenna circuit com-

prising a plurality of loading inductors and a variable capacitor; means for selectively switching said loading inductors with respect to said antenna circuit; a common control for said variable capacitors; a second common control for said switching means; a "sense" transformer having its secondary in said loop circuit; a "balance" transformer having its secondary in said loop circuit; means for detuning said antenna circuit during bearing determination; means for tuning said antenna circuit during sense of direction determination; means for substantially eliminating the effect of said "sense" transformer during bearing determination, means for substantially eliminating the effect of said "balance" transformer during sense of direction determination, and means for detuning said antenna a smaller percentage of frequency at the higher frequencies than at the lower frequencies of the range.

4. In a device of the character of claim 2, means for broadening the tuning of said antenna circuit when said direction finder is operated to determine sense of direction.

5. In a device of the character of claim 3, means for broadening the tuning of said antenna circuit when said direction finder is operated to determine sense of direction.

EDWARD D. BLODGETT.