Oct. 23, 1928. 1,688,956

C. J. BENDIX

CHAIR PARTICULARLY FOR OFFICE USE

Filed March 23, 1926

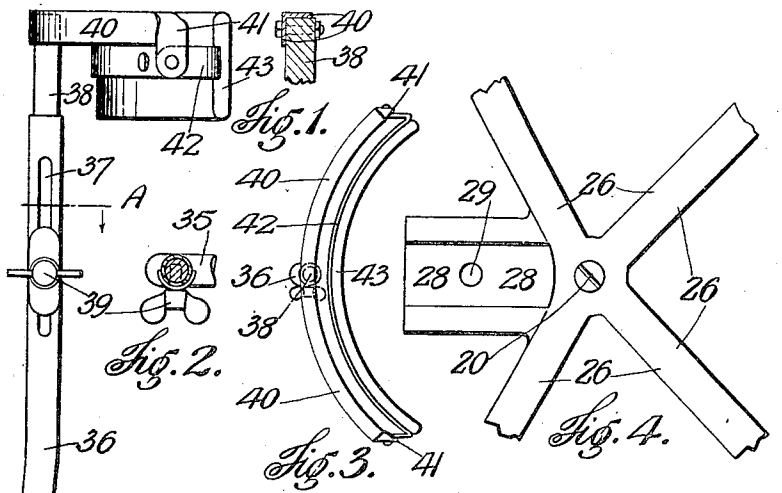

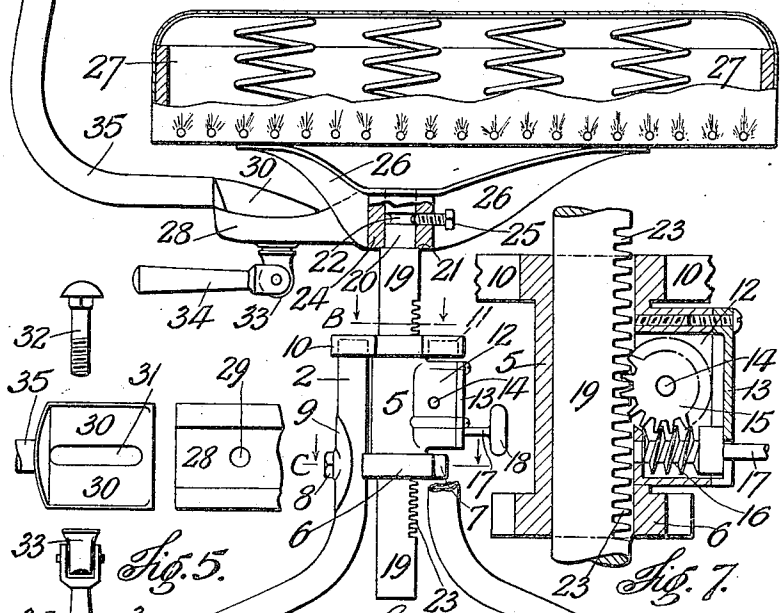

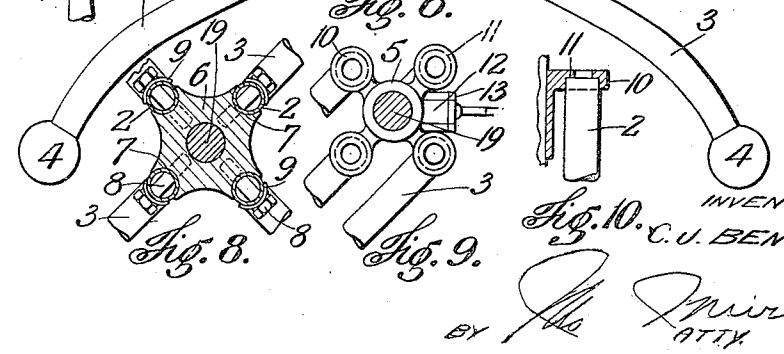

INVENTOR
C. J. BENDIX,
BY
ATTY.

Patented Oct. 23, 1928. 1,688,956

UNITED STATES PATENT OFFICE.

CARL JACK BENDIX, OF EAST MELBOURNE, AUSTRALIA.

CHAIR PARTICULARLY FOR OFFICE USE.

Application filed March 23, 1926. Serial No. 96,853.

This invention relates particularly to rotatable chairs for use in offices, shops and similar places and has for its object to provide a comfortable chair that obviates fatigue and does not cause the user to assume awkward positions and which, whilst providing for rotation of the seat, may be readily adjusted in height without rotation, provides an easily adjusted and effective back rest that leaves the arms and shoulders free for unobstructed movement, is economical of manufacture, may be readily dismantled and erected, the legs being capable of being either aligned or detached, and which may be packed into a minimum of space for storage or transport.

Referring to the accompanying drawings:

Figure 1 is a sectional detail view showing a modified manner of securing the upper end of the stem of a back support to a frame member.

Figure 2 is a detail plan view taken on line A, Figure 6.

Figure 3 is a plan on a reduced scale of a curved frame member and back rest.

Figure 4 is a detail plan of a seat support portions being broken away for convenience of illustration.

Figure 5 is a detail plan showing a back column adjustment, the several parts being separated for convenience of illustration.

Figure 6 is a side elevation, partly in section, of a chair according to this invention, portions being broken away for convenience of illustration.

Figure 7 is an enlarged sectional detail view of the rack and worm adjustment of a supporting column.

Figure 8 is a detail plan taken on line B, Figure 6.

Figure 9 is a detail plan taken on line C, Figure 6. All of the legs of the chair have been swung into alignment.

Figure 10 is a sectional detail view of an abutment and the upper end of a chair leg.

The invention consists of four legs each having an upright or vertical upper end 2 and an outwardly bent or projecting lower end 3 terminating in a ball or foot 4. The legs are preferably formed of metal tubing.

Uniting the upper ends of the legs is a vertically disposed junction member comprising a tubular body portion 5 having an enlarged collar 6 at its lower end. Formed in the periphery of the collar is a series of gullets, indicated at 7, to accommodate the vertical ends 2 of the chair legs. Each leg has formed therein a hole or slot and may be retained in fixed relationship to the junction member by a screw 8 which passes through the hole or slot and is provided with a washer 9. The screws 8 also serve to brace the legs in relation to the junction member. Outstanding from the upper end of the tubular body are four (more or less) abutments each of which consists of a ring 10 having a step or shoulder 11 therein. The upper ends of the chair legs are encircled by the rings 10 and abut against the shoulders 11.

Integral with or attached to the body portion 5 of the junction member is a casing 12 having a removable cover 13. Mounted in the casing 12 is a spindle 14 having mounted thereon a worm wheel 15. Engaging the wheel 15 is a worm 16 mounted upon a worm shaft 17 having a finger piece 18.

Passing freely through the junction member is a seat supporting column 19 having a reduced upper end 20 forming a step or shoulder 21. In the upper end 20 is a circumferential groove indicated at 22. Formed upon the column 19 is a rack comprising a series of teeth 23 engaged by the worm wheel 15.

Carried by the upper end of the column 19 and resting upon the shoulder 21 is a seat support consisting of a boss 24 carrying a retaining screw 25 the inner end of which engages the groove 22. Outstanding from the boss 24 are four (more or less) diagonal arms 26. Secured to the arms 26 is a suitably upholstered or other seat 27. A ball or other bearing may be interposed between the upper end 20 of the column 19 and the boss 24 of the seat support. The seat support may be formed in two or more pieces for packing and transport. Each piece may comprise a diagonal arm having a central or intermediately located boss. When the arms are superposed a cross as shown in Figure 4 is provided. The rear arms 26 are preferably shorter than the front arms. The liability of a person being upset or over-balancing should the chair be tilted backward is thereby minimized.

Outstanding from the rear of the boss 19 of the seat support is a curved bed piece 28 having therein a bolt hole indicated at 29.

Resting in the bed piece 28 is an adjusting member or foot 30 having a slot therein, indicated at 31. The lower surface of the foot is curved to correspond with the upper surface of the bed piece 28. Passing through the bolt hole 29 and the slot 31 is a clamping bolt 32.

Threaded on the bolt is a nut 33 having a small hand lever 34 pivoted thereto.

Secured to the foot 30 is the lower curved end 35 of a back column 36. The column is preferably formed of metal tubing. Formed in one side of the upper end of the column is an adjusting slot indicated at 37.

Slidable within the upper end of the back column 36 is the stem 38 of a back support. Passing through the slot 37 and threaded into the stem 38 is a locking screw 39. Secured to the upper end of the stem 38 is a laterally disposed and forwardly curved frame member 40 having a depending lug 41 at each end thereof. The frame member may be fixed to the stem 38 or detachable therefrom, or pivotally attached thereto (Figure 1). Pivoted to the lugs is a back rest member 42 having attached thereto an upholstered or other curved back rest 43. The back rest it will be seen is so pivoted that it always returns to an erect position, the lugs 41 functioning as limit stops.

With this invention, by removing the screws 8, the legs may be readily detached from the junction member or swung into alignment so that they meet together for packing or transport. Should slots be provided in the legs 2 it will not be necessary to remove the screws 8 to align the legs. The chair seat 27 is rotatable, the function of the screw 25 being to retain the seat support to the upper end 20 of the column 19. To adjust the height of the chair the worm shaft 17 is rotated by hand thereby rotating the worm wheel 15 and moving the column 19 vertically. To adjust the angle of the back support the hand lever 34 is operated and the back column 36 and the foot or adjusting member 30 are moved forwardly or backwardly on the bed piece 28. The height of the back rest 43 may be adjusted by operating the locking screw 39 of the back column 36.

The back rest 43 pivots freely against the back of the person occupying the chair.

If desired, the frame member 40 may be pivotally attached or detachably secured to the top of the stem 38, as seen in Figure 1.

What I claim is:

1. In a chair of the type described, a junction member comprising a tubular body portion, a collar carried by the upper end of the body portion and formed in its under surface with circular depressions to receive the upper ends of supporting legs, a collar provided at the lower end of the tubular body and formed in alignment with the respective depressions of the upper collar with edge depressions opening radially of the collar, a series of legs having straight portions to fit in vertically aligned depressions of the upper and lower collars, a housing integral with the body portion, and mechanism arranged wholly within the housing for slidably adjusting a seat post.

2. In a chair of the type described, a junction member comprising a tubular body portion, a collar carried by the upper end of the body portion and formed in its under surface with circular depressions to receive the upper ends of supporting legs, a collar provided at the lower end of the tubular body and formed in alignment with the respective depressions of the upper collar with edge depressions opening radially of the collar, a series of legs having straight portions to fit in vertically aligned depressions of the upper and lower collars, means bearing on the outer side of each leg and removably connected to the lower collar to prevent relative movement of the leg, a housing integral with the tubular body and arranged intermediate the upper and lower collars, and mechanism arranged wholly within the housing for slidably adjusting a seat post.

3. In a chair of the type described, a junction member comprising a tubular body portion, a collar carried by the upper end of the body portion and formed in its under surface with circular depressions to receive the upper ends of supporting legs, a collar provided at the lower end of the tubular body and formed in alignment with the respective depressions of the upper collar with edge depressions opening radially of the collar, a series of legs having straight portions to fit in vertically aligned depressions of the upper and lower collars, a bolt passed through each leg and threaded into the lower collar, a washer on the bolt bearing against and conforming to the outer surface of the leg, said washer extending above and below the lower collar, a housing integral with the tubular body and arranged intermediate the upper and lower collars, a seat post slidably mounted in the tubular body, and mechanism arranged wholly within the housing for slidably adjusting the seat post.

4. In a chair of the type described, a junction member comprising a tubular body portion, a collar carried by the upper end of the body portion and formed in its under surface with circular depressions to receive the upper ends of supporting legs, a collar provided at the lower end of the tubular body and formed in alignment with the respective depressions of the upper collar with edge depressions opening radially of the collar, a series of legs having straight portions to fit in vertically aligned depressions of the upper and lower collars, a housing integral with the tubular body and arranged intermediate the upper and lower collars, a seat post slidably mounted in the tubular body, and mechanism arranged wholly within the housing for slidably adjusting the seat post.

Dated this 29th day of October, 1926.

In testimony whereof I affix my signature.

CARL JACK BENDIX.