Dec. 6, 1949 C. C. WILM 2,490,395

RESPIRATOR

Filed March 17, 1947 6 Sheets-Sheet 1

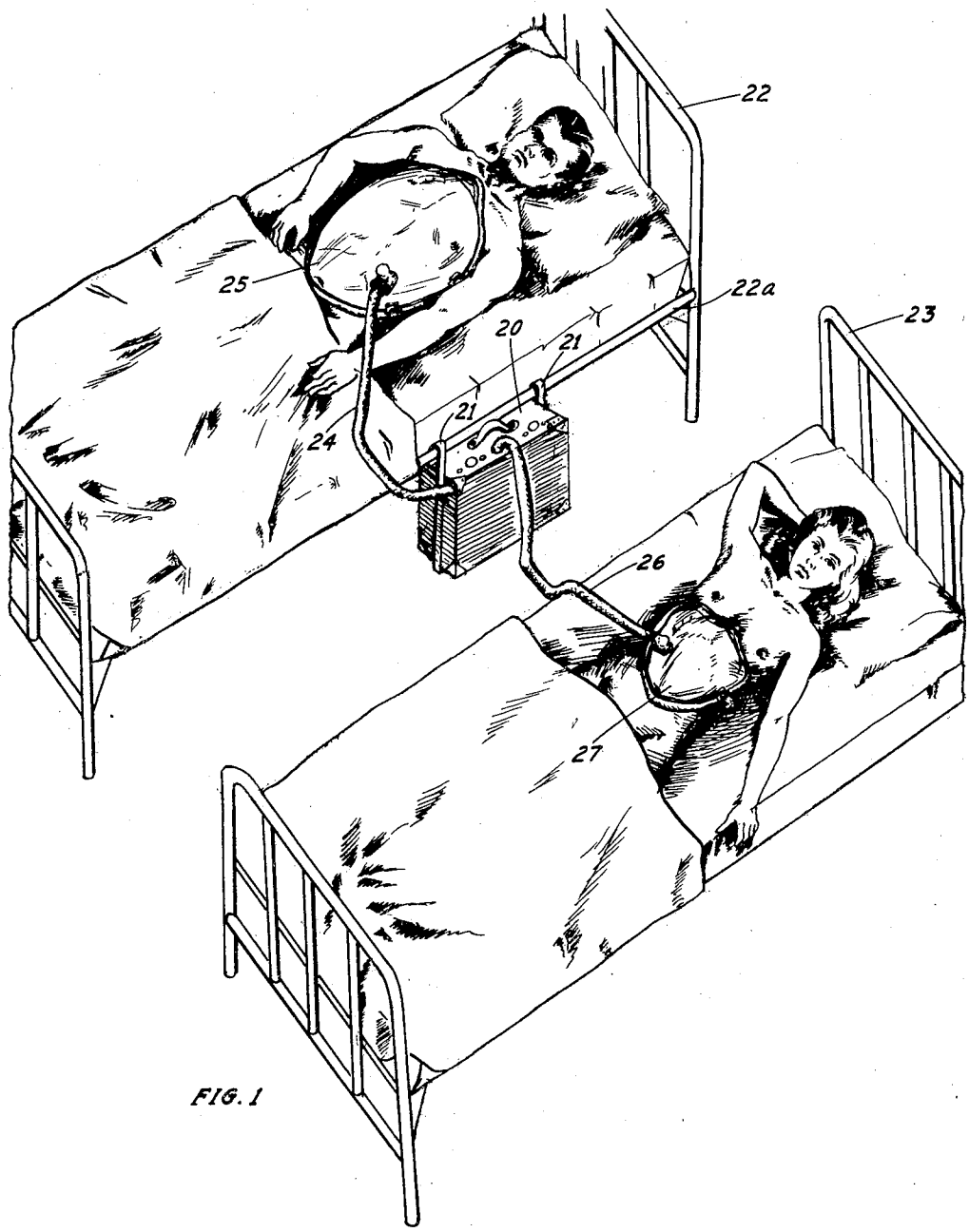

FIG. 1

INVENTOR.
CARL C. WILM

BY
H. A. McGraw
ATTORNEY

Dec. 6, 1949 C. C. WILM 2,490,395

RESPIRATOR

Filed March 17, 1947 6 Sheets-Sheet 2

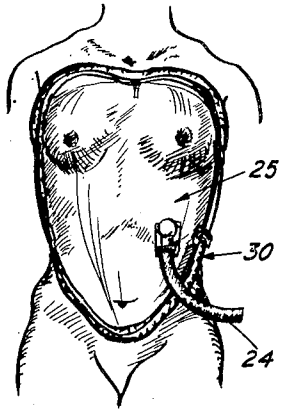

FIG. 2

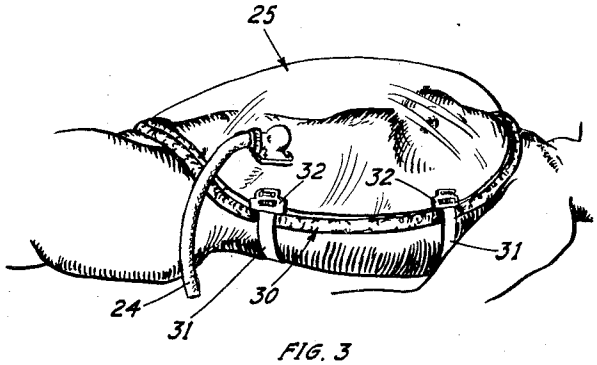

FIG. 3

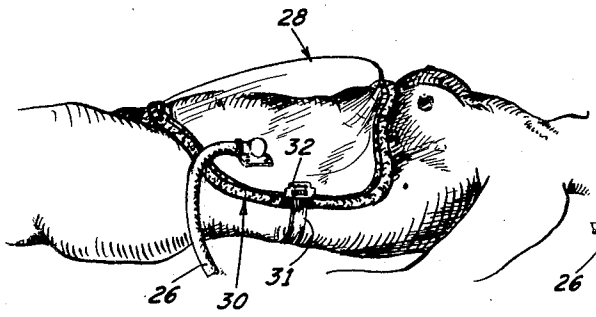

FIG. 4

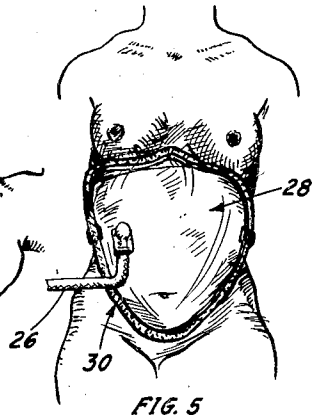

FIG. 5

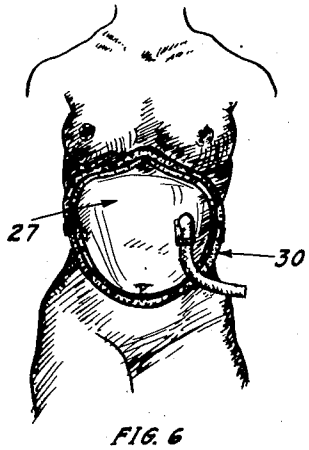

FIG. 6

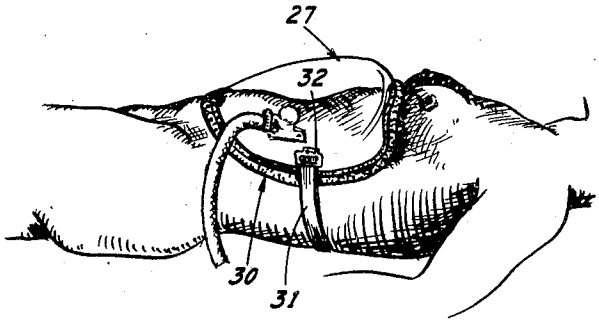

FIG. 7

INVENTOR.
CARL C. WILM

BY

H. A. McGrew

ATTORNEY

Dec. 6, 1949 C. C. WILM 2,490,395

RESPIRATOR

Filed March 17, 1947 6 Sheets-Sheet 3

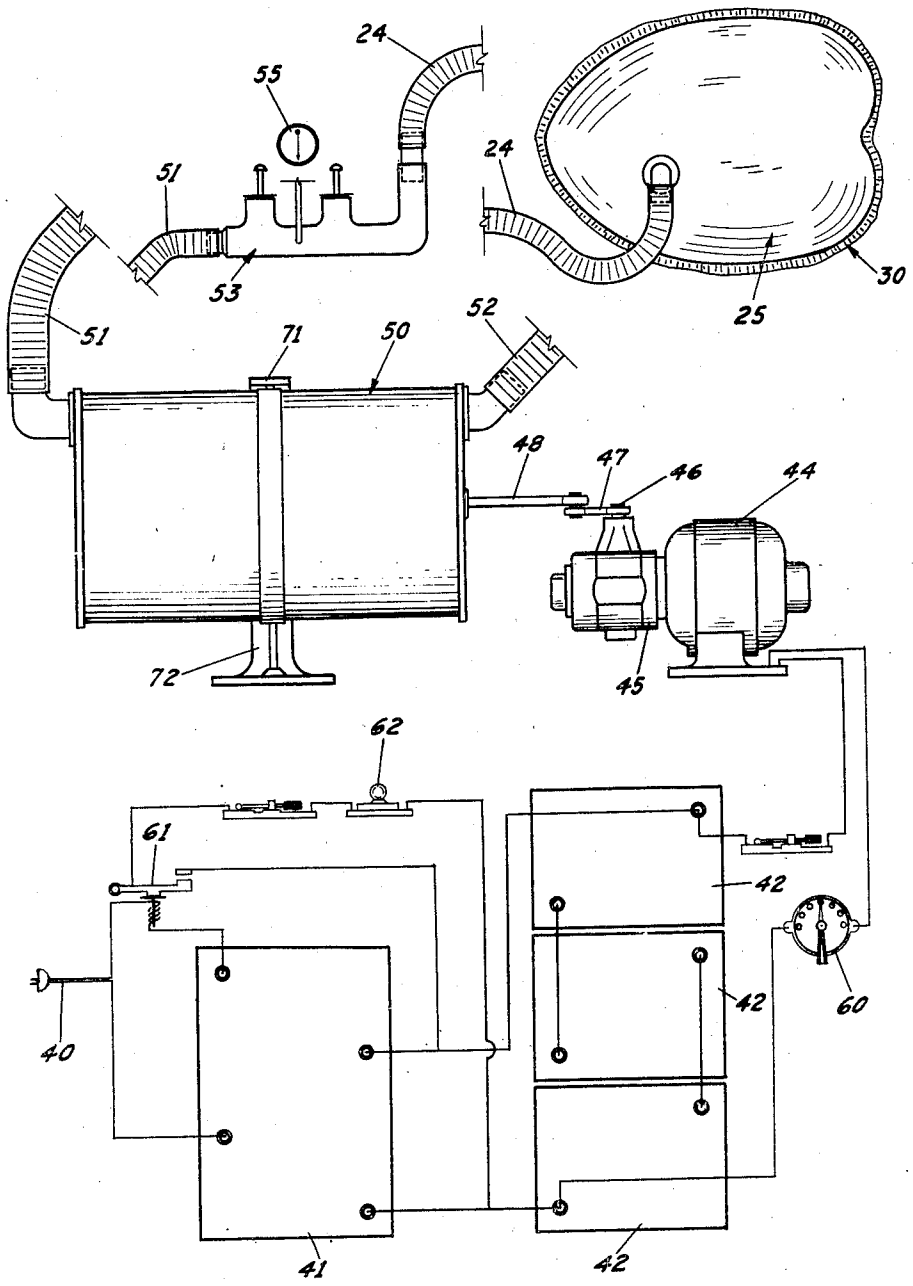

FIG. 8

INVENTOR.
CARL C. WILM

BY
M. a. McGrew
ATTORNEY.

Dec. 6, 1949 C. C. WILM 2,490,395

RESPIRATOR

Filed March 17, 1947 6 Sheets-Sheet 4

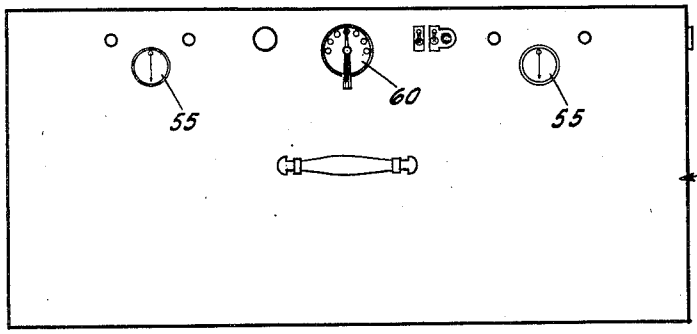

FIG. 9

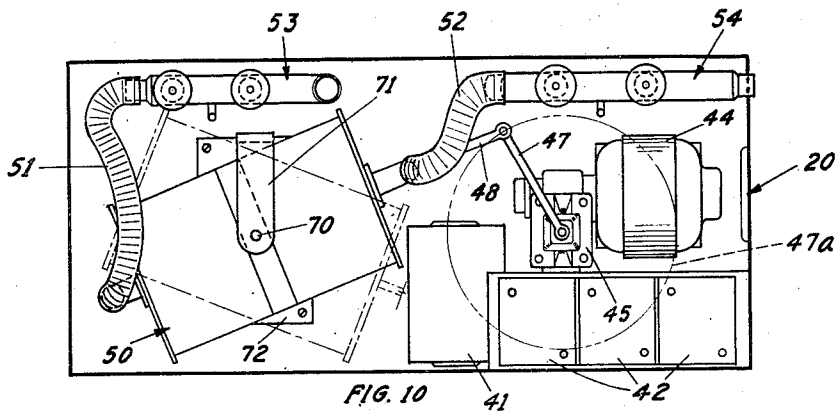

FIG. 10

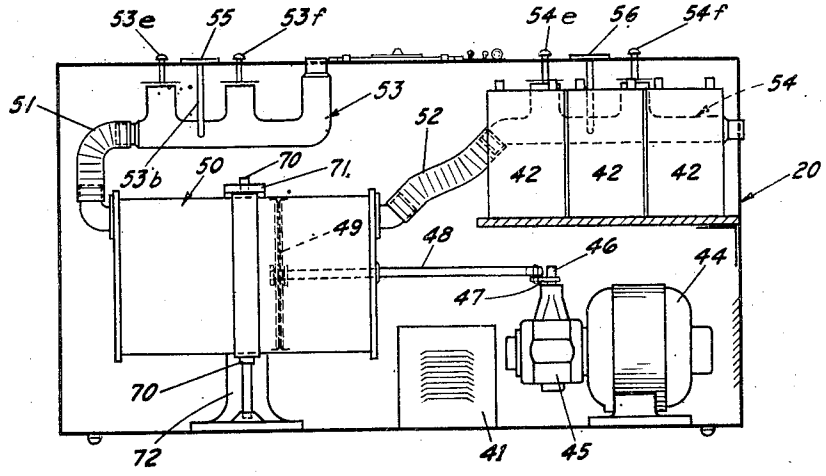

FIG. 11

INVENTOR.
CARL C. WILM

BY

ATTORNEY.

Dec. 6, 1949 C. C. WILM 2,490,395

RESPIRATOR

Filed March 17, 1947 6 Sheets-Sheet 5

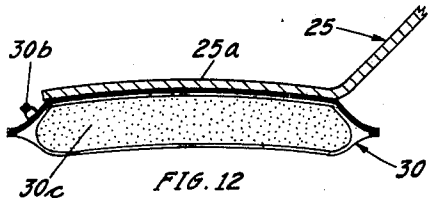

FIG. 12

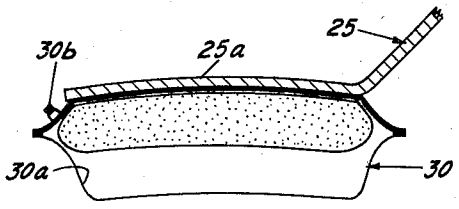

FIG. 13

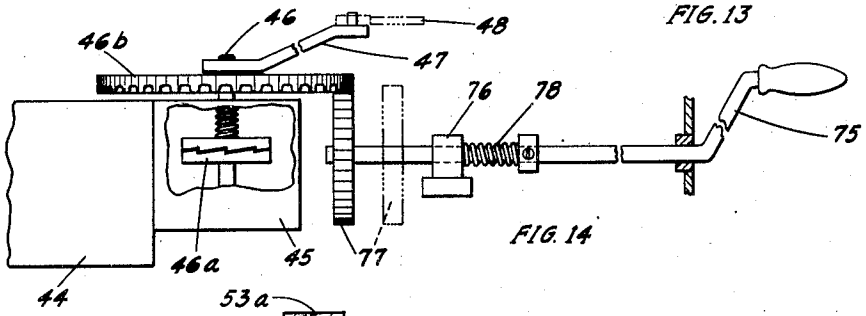

FIG. 14

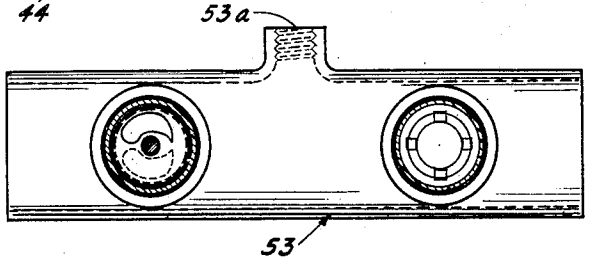

FIG. 15

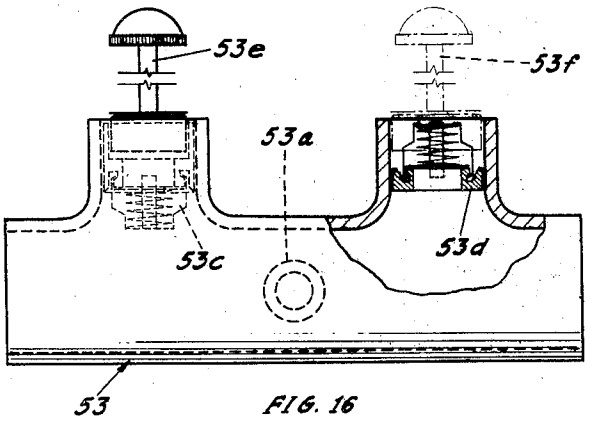

FIG. 16

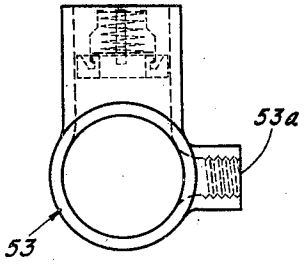

FIG. 17

INVENTOR.
CARL C. WILM

BY

ATTORNEY.

Dec. 6, 1949 C. C. WILM 2,490,395

RESPIRATOR

Filed March 17, 1947 6 Sheets-Sheet 6

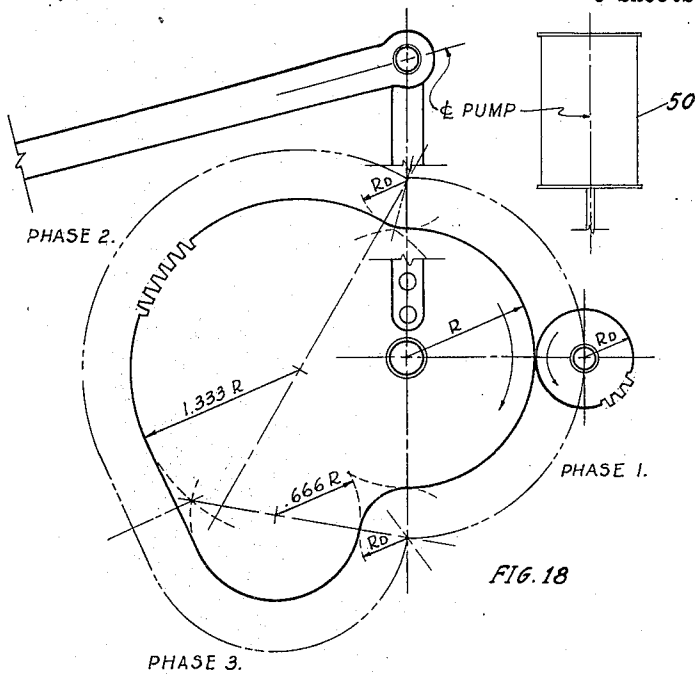

FIG. 18

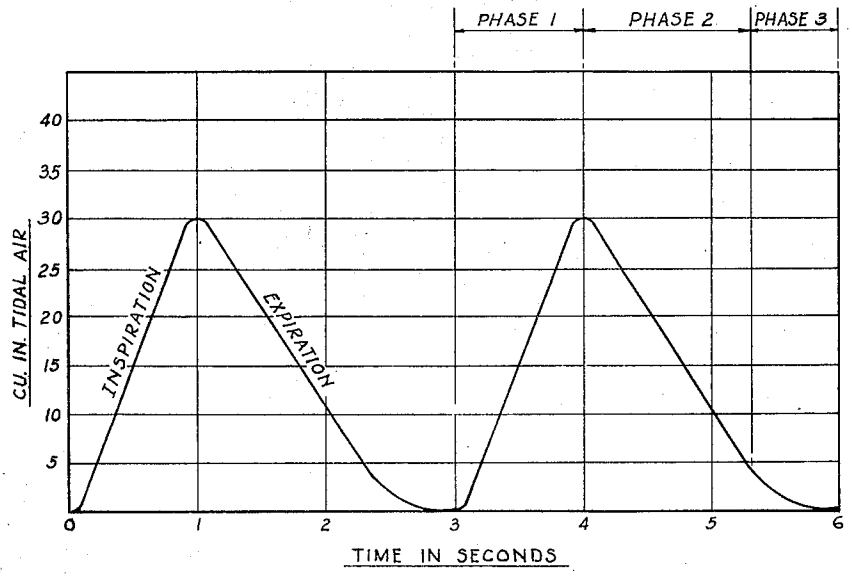

BREATHING CYCLE OF 15-YEAR-OLD BOY

FIG. 19

INVENTOR.
CARL C. WILM

BY H. A. Toulmin

ATTORNEY.

Patented Dec. 6, 1949 2,490,395

UNITED STATES PATENT OFFICE

2,490,395

RESPIRATOR

Carl C. Wilm, Denver, Colo., assignor to J. J. Monaghan Company, Inc., Denver, Colo., a corporation of Colorado

Application March 17, 1947, Serial No. 735,162

4 Claims. (Cl. 128—30)

1

The present invention relates to respirators. It has to do more particularly, with respirators for patients suffering from diseases, such as paralysis, of the respiratory organs. Moreover, it has to do with an improved respirator which conforms and fits the portion or portions of the patient's body in such a manner as to perform its desired function, while at the same time leaving exposed other portions of the body to permit the ready access thereto for treatment purposes.

An object of the present invention is to provide an improved respirator including a body-engaging, preferably transparent shell member having sealing means on the perimeter thereof capable of conforming to the contour and irregularities of the torso of the patient to which it is applied; it being another object to provide improved sealing means of an inflatable type including auxiliary sealing means capable of functioning when and if the inflatable sealing means becomes deflated.

Another object of the present invention is to provide an improved respirator of the foregoing character, in which a single power unit serves two separate and independent torso-engaging shell members, thus permitting the simultaneous treatment of two different patients by a single power unit.

A further object of the present invention is to provide an improved respirator including one or more torso-engaging shells having means for removably attaching them to a torso or torsos, wherein mechanism is provided for changing the atmospheric pressure within the shell or shells in accordance with the normal breathing cycle of the patient or patients being treated.

A further object of the present invention is to provide double-acting pumping means as a part of the respirator of the invention, in which the source of power for operating the pump is preferably an electric motor operated by batteries; and wherein the electric motor is provided with manually operable means permitting manual operation of the double-acting pump in the event of failure of the power means.

The foregoing and other objects and advantages of the present invention will appear from the following description and appended claims when considered in connection with the accompanying drawings forming a part of this specification wherein like reference characters designate corresponding parts in the several views.

In said drawings:

Fig. 1 is a perspective view illustrating one use of the present invention and showing a single

2

power unit for two shells for the treatment of two different patients.

Fig. 2 is a front elevational view illustrating a full-length shell embodying the invention and shown applied to a female human.

Fig. 3 is a side elevational view of the shell and human form shown in Fig. 2.

Fig. 4 shows a half-length shell embodying the invention shown applied to a human female, the human form being shown in side elevational view with the breasts outside the area of the shell.

Fig. 5 is a front elevational view of what is shown in Fig. 4.

Fig. 6 is a front elevational view of a mid-torso shell embodying the invention shown covering substantially no more than the upper abdominal portion or region of the patient, the shell being shaped to conform to either a female or a male human.

Fig. 7 is a side elevational view of what is shown in Fig. 6.

Fig. 8 is a schematic or diagrammatic view of the respirator apparatus of the present invention disclosing a single power unit for association with two torso-engaging shell members, and illustrating generally the wiring diagram embodied in the respirator apparatus.

Fig. 9 is a top plan view of the power unit case, illustrating gauges associated therewith.

Fig. 10 is a top plan view of the power unit of Fig. 9, with the cover removed to reveal the working parts of said unit.

Fig. 11 is a side elevational view with a wall of the power unit case removed, revealing the parts within the case.

Fig. 12 is a transverse sectional view, taken through the periphery of the torso-engaging shell and sealing means of Fig. 2, illustrating the inflatable sealing means in deflated condition.

Fig. 13 is a view similar to Fig. 12, but showing the sealing means inflated.

Fig. 14 is a detail fragmentary elevational view of one form of mechanism for effecting the manual operation of the double-acting pump.

Fig. 15 is a top plan view of the valve assembly of the respirator structure of the present invention, with the valve actuating means removed.

Fig. 16 is a side elevational view, partly broken away and partly in section, of the structure shown in Fig. 15, with the valve actuating means shown in association therewith.

Fig. 17 is a right end elevational view of the structure shown in Fig. 16, looking toward the left of Fig. 16.

Fig. 18 is a diagrammatic or schematic lay-out

view illustrating certain optional gear assembly for the drive or power unit of the respirator; and

Fig. 19 illustrates a graph of the normal human breathing cycle created by the gear assembly of Fig. 18.

Referring now particularly to Fig. 1 of the drawings, there is shown in this figure, merely by way of illustration, one application of a respirator unit or assembly embodying the present invention. As shown, the power unit or mechanism of the respirator is indicated as a whole at **20** and is hung, by means of brackets **21**, over the side rail **22***a* of a hospital cot or bed **22** upon which reposes a male patient. Spaced from the bed **22** is a similar bed or hospital cot **23** upon which reposes a female patient. The power unit or mechanism **20** of the respirator is connected by means of a flexible conduit or tube **24** to a preferably transparent shell **25** which is removably attached to the front portion of the torso of the male patient in bed **22**. A similar conduit or flexible tube **26** extends from the unit **20** to a generally similar and preferably transparent shell **27** which is removably positioned over the mid-torso or upper abdominal portion or region of the female in bed or cot **23**. Thus, it will be seen, that one of the respirator power units supplies alternate pressure and vacuum in accordance with the normal breathing cycle of a human being, to two patients at the same time. This was impossible with previously known respirator apparatus and equipment all of which was only capable of use for one patient.

Referring now particularly to Figs. 2 to 7, inclusive, of the drawings, several forms and sizes of preferably transparent torso-engaging shells embodying the present invention, are shown. In Figs. 2 and 3, the shell, shown as a whole at **25** and corresponding to the shell applied to the male patient in Fig. 1 of the drawings, is substantially heart shaped and of a size to fit over and cover substantially the entire front portion of a male or female torso, extending from substantially the neck region of the patient to substantially the lower part or portion of the pelvic region as shown in these figures, however, the shell **25** is applied to a female patient, it being noted that the shell covers the breasts of said patient. As best seen in the side elevational view, Fig. 3, the shell **25** has its perimeter shaped so as to conform generally to the shape of the human torso and is also provided at its perimeter with suitable compressible and thus flexible improved sealing means, shown as a whole at **30**, see also Figs. 12 and 13. Figs. 2 through 7 illustrate the shell in relationship to the female form so as to illustrate the position of the breasts relative to the shell. Since the shells will fit the female form, they must necessarily conform to the male.

The shell **25**, as shown, is preferably removably attached with, however, a snug fit on the patient, by means of adjustable straps **31** and suitable buckles **32**, see particularly Fig. 3.

In Figs. 4 and 5 there is shown a so-called half-length respirator shell, shown as a whole at **28**, and applied to the torso of a female patient. This shell **28** has a perimeter-engaging seal **30** and is held in position upon the patient by a single strap **31** whose free end engages a buckle **32**. The shell **28** is also shaped preferably to conform as nearly as possible to the contour or shape of the human torso and as seen in Fig. 5, has its upper portion shaped to conform generally to the outline of the female breasts, the latter being located outside the shell in this form of the invention and its mode of application. A flexible tube or conduit such as that shown at **26** in Fig. 1, is attached to the shell **28** adjacent either the right side or the left side thereof, as seen in Figs. 4 and 5.

A third type of form of respirator shell known as a mid-torso shell, is shown as a whole at **27** in Figs. 6 and 7. This shell is the same as that designated **27** in Fig. 1 of the drawings. When compared with shells **25** and **28**, shell **27** will be seen as being somewhat smaller and thus designed to cover a smaller area of the patient's torso. The shell **27** is designed particularly for treatment of a patient wherein it is only necessary to provide a shell which covers little more than the upper abdominal portion or region of the patient, the breasts and breast region and the chest being left exposed as in Figs. 4 and 5 wherein shell **28** is illustrated.

The shell **27** has applied to its perimeter a sealing member **30** like the sealing members of the preceding forms and the shell is shaped so as to conform, at least generally, to the conformation, curves and shape of the human torso. As in the preceding forms, the shell **27** is removably attached with a snug-like fit to the body of the patient by means of an adjustable strap **31** and a securing buckle **32**.

In each of the forms of shell, namely those indicated at **25**, **28** and **27** the perimeter or marginal portion thereof has applied to it one of the sealing members **30**. In Figs. 12 and 13 which, as stated above, are fragmentary sections through the shell and sealing means of Fig. 2, the parts are shown on a full scale size. The perimeter or marginal portion **25***a* of the shell has secured, in any suitable manner, to its under surface, the external or inflatable member **30***a* of the sealing means, there being provided an air intake or inflating valve **30***b* located in the outer or exposed portion of the inflatable tube-like member **30***a*. As indicated, that portion of the inflatable member which is attached to the shell portion **25***a*, is formed from somewhat thicker rubber or other material than the portion away from the shell rim. Located within the inflatable member **30***a* is a strip or pad **30***c* formed from porous rubber. Thus, it will be seen that the sealing means or unit **30** comprises two thicknesses of sheet rubber to form the inflatable portion **30***a* thereof and the enclosed strip of porous rubber **30***c*.

In Fig. 1, the sealing member is shown as deflated or uninflated, whereas in Fig. 13, it is shown as inflated. By providing the porous rubber member **30***c*, in the event the inflatable portion **30***a* should accidentally leak air, the porous rubber member **30***c* will seal the sealing member against further leakage of air and will act as a cushion between the respirator shell and the patient's body so that the patient will not be subjected to any discomfort and no constriction or restriction of the blood vessels at any point. Moreover, the pneumatic or inflatable feature of the present improved sealing unit insures an even pressure at all points contacted by the shell or shield, the porous sponge rubber **30***c* preventing the possibility of any undue application of pressure at any point or points of contact. The porous rubber, as indicated, provides also a safety feature in the event the pneumatic tube portion **30***a* develops a leak.

It will also be appreciated that one of the im-

portant features and advantages of the present improved type of sealing means **30** is the fact that by virtue of said sealing means, a given size of shell will adapt itself to and fit perfectly upon a great variety of sizes and shapes of human beings.

Referring particularly to Figs. 8 to 11, inclusive, 14 to 16, inclusive, and 19, of the drawings the mechanical units or elements which together comprise the improved respirator of the present invention, are shown.

In addition to providing dual torso-engaging shells for two different patients with each power unit, to thus double the number of patients capable of treatment by a given number of power units or respirators, one of the present features of the present invention is to produce within both shells alternate pressure and vacuum phases which actually simulate the normal breathing cycle of each of the human beings being treated, thus making the alternate application of pressure and creation of vacuum so nearly like the normal breathing of a human being as to effect the inflation and deflation of the lungs without any discomfort or exertion on the part of the patients being treated.

In Figs. 9, 10 and 11, the power unit, so-called, **20** of Fig. 1 of the drawings is shown in several positions. This unit **20** contains all of the actual working or moving parts of the respirator apparatus and is included in a compact arrangement within a suitable case or housing which is of such a size and weight as to permit it to be carried from place to place at will.

The artificial respirator of the present invention is particularly adapted for use in connection with patients who have been afflicted with the type of infantile paralysis which paralyzes the chest muscles, making it impossible, or at least most difficult, for the patient to breathe of his own volition. The respirator may, however, be used in various ways, such as in cases of drowning or asphyxiation, in which it becomes necessary to produce respiration in the human being by means of some sort of mechanical contrivance or apparatus.

While the same principle involving the application of the release of negative pressure is utilized in connection with applicant's respirator, it is applied to the body by means of the lightweight, pliable shell, preferably formed with plastic, and referred to above, which shell, when applied, covers no more than the chest and abdomen of the patient. By providing three types of shells, such as those disclosed in Figs. 2 to 7, inclusive, of the drawings, a shell can be chosen to fit the needs of the patients. This is important since some patients have partial use of some of their respiratory muscles. By providing the sealing means **30**, referred to above, positive sealing of air is assured and this is accomplished without any undue pressure being applied to any part of the patient's body. Since all of the body except the chest and abdomen are accessible at all times for physiotherapeutic treatments, the speed of recovery of the patients is considerably increased. Moreover, since the neck of the patient is completely exposed, the performing of a tracheotomy is facilitated. This particular operation often has to be performed during the acute stage of infantile paralysis in order to provide free passage for air going into or out of the lungs, since throat muscles are paralyzed and are unable to control the glottis and epiglottis, and obviously is very difficult to perform in any of the presently known types of respirators, because of the fact that the sealing elements around the neck or in the region thereof interfere greatly.

With particular reference to the shell **25** of Figs. 2 and 3, the reverse curve at the throat end or area leaves that area easily accessible for surgery.

The present respirator being, of course, of portable nature, is also very simple to install in readiness for use. In fact, it is only necessary to lay the shell on the patient, upon which breathing immediately begins, and adjust either one or two of the straps **31**, depending upon the particular shell used. This installation can be accomplished by an unskilled person in a period of time not exceeding twenty (20) seconds, whereas the application of other and known types of respirators required from 5 to 10 minutes' time.

With particular reference to Fig. 8 of the drawings, current from an outside electrical source (usually 110 volt 60 cycle alternating current) enters through an electrical conduit **40** and feeds into a rectifier unit **41** in which unit the current is changed into 6 volt, direct current, which feeds into a series of storage batteries **42**. Current from these batteries flows into an electric motor **44** carrying a gear box **45**. The gear box contains suitable gearing driven by the shaft of the electric motor, which gear turns or operates a crank shaft **46**. This crank shaft is connected by a drive arm **47** to a piston rod **48** of a piston or plunger **49** forming a part of a double-acting pneumatic pump **50**.

The gearing in the gear box **45** is such as to drive or rotate the driven shaft **46** at the rate of 15 to 25 R. P. M., depending upon the speed of rotation of the motor as determined by setting of rheostat **60**.

The operation of the two-way pneumatic pump **50** creates alternate suction and pressure which is carried through conduits or flexible tubing **51** and **52** to substantially identical valve assemblies **53** and **54**, see Figs. 8, 10 and 11. A pressure gauge **55** is associated with valve assembly **53** and a similar pressure gauge **56** is associated with valve assembly **54**. These gauges, as shown, are mounted in the top wall of the case **20**, see particularly Figs. 9 and 11.

One of the valve assemblies is shown in detail in Figs. 15, 16, and 17 of the drawings. The assembly **53** is connected through flexible conduit or tube **51** with the left end of pump cylinder **50** and supplies alternate suction and pressure produced by the pump, the gauge **55** being connected to port **53***a* by a short pipe or conduit **53***b* to indicate the pressure and vacuum being attained. The valve assembly **53** includes adjustable valves **53***c* and **53***d* having adjustment handles **53***e* and **53***f*, respectively. Figs. 15, 16, and 17 show vacuum control valve **53***c* and pressure control valve **53***d*, both constructed in an integral unit with tube **53** which is connected in series with air hose running from pump **50** to shell **25**. On the vacuum stroke, valve **53***c* opens downward, allowing outside air to enter the system and lower the vacuum. On the pressure stroke, valve **53***d* opens upward, allowing air in the system to escape and lowering the pressure. Amount of vacuum or pressure desired is obtained by adjusting control knobs, which alter size of escape holes above valves, thus controlling the amount of air entering or leaving the system and therefore controlling the vacuum and pressure. Port **53***a* leads to gauge **55** which indicates the amount of vacu-

um and pressure present in the system. After the air pressure and vacuum are regulated by the adjustable valves, it is conducted by flexible tubing 24 to shell 25, see Figs. 1, 2 and 8, where it produces the necessary motion of the thorax and abdomen of the male patient who is reposing in bed 22. The amount of vacuum and pressure admitted to the shell 25 is adjusted independently by the adjustment members or knobs 53e and 53f. The number of breathing cycles per minute is controlled by a rheostat 60, see Figs. 8 and 9 which controls the speed of rotation of the electric motor 44, or by an optional method embodied in the present invention, of utilizing a variable governor (not shown) which is incorporated in the motor assembly.

While air is being admitted to shell 25, due to the action of the piston 49, additional air is being drawn through flexible conduit or tubing 26, from shell 27 applied to the female patient in bed 23, this air being drawn by the opposite side of piston 49 through flexible conduit 52 and its associated valve assembly 54. Should the outside power supply through conduit 40, Fig. 8, for any reason fail, relay 61, which ordinarily is maintained in an open position by flow of electricity from the outside power supply, moves into its closed position, closing the circuit from batteries 42 to flashing red light or signal 62, indicating to attendants that the power unit is now on battery operation and will continue to function only as long as the batteries retain their electrical charge. A signal bell, buzzer, or the like may be substituted for the flashing signal light 62, if desired; or, if desired, a visible and an audible signal as well, may be used. Any or all of these signals may be remotely connected to any part of a building or hospital, if so desired.

It is to be noted, with particular reference to Figs. 8, 10 and 11 of the drawings, that the cylinder of the double-acting pump 50 is preferably mounted for horizontal swinging movement about pivot points 70, 70 in a substantially U-shaped bracket 71 carried by a standard 72 which, as shown, is mounted upon the base or floor of the rectangular case 20, see particularly Fig. 11. This permits the cylinder 50 to be oscillated or swung from its full-line position of Fig. 10 to the broken-line position shown in that figure, this action being caused by the crank 47 which is connected to the outer end of connecting rod 48 and which rotates in a circle such as that indicated by the broken circular line 47a in Fig. 10 of the drawings.

As mentioned above, it is particularly desirable that the double-acting pumping unit 50 produce within the torso-attached shells 25 and 27, alternate pressure and vacuum phases which simulate the normal breathing cycle of the human beings to which the respirator is applied. One method, or manner of accomplishing this desirable result is disclosed diagrammatically or schematically in Fig. 18 of the drawings wherein suitable gearing is illustrated, which gearing is, of course, located within the gear box 45. The gears are preferably cut so as to produce the normal breathing cycle instead of the usual sine curve which is produced by a conventional bellows and crankshaft arrangement. The shape and cutting of the gears shown in Fig. 18 will, of course, be varied in accordance with the particular cycle which it is desirable to produce.

With reference to Fig. 19, there is shown in this figure a graph representing the breathing cycle of a 15-year-old boy, merely by way of example. The particular drive gearing illustrated in Fig. 18 of the drawings is suitable only for use in connection with a single-acting pump. It is to be understood also that the number of cycles of breathing per minute may be conveniently controlled by means of an adjustable governor (not shown) which varies the speed of the electric motor 44. Such adjustable governor may be provided as an integral part of the motor unit.

It will be readily appreciated that it is obviously more beneficial to a patient to produce a normal type of breathing rather than an unnatural one and that by so producing this normal breathing, the recovery of the patient is considerably speeded up.

By virtue of the present structure, the respirator embodied therein may be used in an ambulance during the transporting of a patient or patients from one location to another location, it being understood that the unit, that is the electric motor 44 and related parts for operating the pump 50, are operated from the current in the electric batteries 42. The 6-volt circuit of ambulance may be connected to unit for use over extended period of time.

One of the more important features of the invention is illustrated in detail in Fig. 14 of the drawings. In the event of failure of the power source, particularly in the event the charge in batteries 42 is sufficiently depleted to fail to drive the electric motor 44, it is, of course, highly desirable that some suitable manually operable means may be brought into operation immediately so as to prevent any possible break in the artificial breathing to which the patient or patients are being subjected. As seen in Fig. 14, the drive arm or crank 47 mounted upon the shaft 46 and connected at its outer end to the piston rod 48 of the double-acting pump unit 50, may be caused to rotate by means of a hand crank 75. The shaft 46 is provided with a ratchet device 46a located within the gear box 45 and also requires a circular or annular gear or rack 46b located outside the gear box and being of such a diameter as to extend outwardly beyond the wall thereof. In normal motor operation, the shaft 46 and associated parts are driven through the ratchet device 46a. When, however, the power fails, the shaft 46 may be rotated through the annular gear 46b. As shown, the crank 75 has its shank portion journaled in a suitable bearing 76, the shank portion carrying at its end a gear 77 which is adapted to be shifted into and out of mesh with the teeth of the annular gear 46b. As seen in full lines in Fig. 14, the gears 46b and 77 are in meshed relationship, the gear 77 being shown out of mesh in its broken-line position of this figure. Spring 78 maintains gears in out-of-mesh position during normal operation. By providing such a structure, any novice may immediately shift the hand crank 75 toward the left in Fig. 14 to cause the gears 46b and 77 to intermesh and thus permit continuation of the operation of the double-acting pump 50. Incorporation of the ratchet obviates the necessity of disconnecting any of the drive mechanism before manual operation.

Having thus described the invention, what is claimed is:

1. Means for simultaneously applying artificial respiration over areas of the bodies of two patients, comprising: two hollow, rigid, convex shells, each of a size and shape to cover a given area on one of said bodies; means for sealing the peripheral edges of said shells to said bodies; an air conduit communicating with each shell; a

pump cylinder, said air conduits communicating with opposite extremities of said pump cylinder; a piston reciprocally mounted in said cylinder between said conduits so that movement thereof in one direction will create air pressure in the first shell and a partial vacuum in the second shell, and movement in the other direction will create a partial vacuum in the first shell and air pressure in the second shell; and means for reciprocating said piston.

2. Means for simultaneously applying artificial respiration over areas of the bodies of two patients, comprising: two hollow, rigid, convex shells, each of a size and shape to cover a given area on one of said bodies; means for sealing the peripheral edges of said shells to said bodies; an air conduit communicating with each shell; a pump cylinder, said air conduits communicating with opposite extremities of said pump cylinder; a piston reciprocally mounted in said cylinder between said conduits so that movement thereof in one direction will create air pressure in the first shell and a partial vacuum in the second shell, and movement in the other direction will create a partial vacuum in the first shell and air pressure in the second shell; means for reciprocating said piston; an enclosing case surrounding said pump cylinder and its actuating means; and suspension hooks mounted on said case for suspending the latter from the bed of one of said patients.

3. Means for simultaneously applying artificial respiration over areas of the bodies of two patients, comprising: two hollow, rigid, convex shells, each of a size and shape to cover a given area on one of said bodies; means for sealing the peripheral edges of said shells to said bodies; an air conduit communicating with each shell; a pump cylinder, said air conduits communicating with opposite extremities of said pump cylinder; a piston reciprocally mounted in said cylinder between said conduits so that movement thereof in one direction will create air pressure in the first shell and a partial vacuum in the second shell, and movement in the other direction will create a partial vacuum in the first shell and air pressure in the second shell; means for reciprocating said piston; an independent air intake check valve opening to each conduit; an independent air discharge check valve opening from each conduit; and manually operated means for independently adjusting the air flow through each valve so that the pressure and vacuum phases in each shell may be individually regulated.

4. Apparatus according to claim 1, with the addition that the pump cylinder is pivotally mounted for rocking movement during pumping operation thereof.

CARL C. WILM.

REFERENCES CITED

The following references are of record in the file of this patent:

UNITED STATES PATENTS

Number	Name	Date
2,195,744	Emerson	Apr. 2, 1940
2,287,939	Kraft	June 30, 1942
2,383,821	Scanlan	Aug. 23, 1945

FOREIGN PATENTS

Number	Country	Date
458,403	Great Britain	Dec. 14, 1936

OTHER REFERENCES

Plastics, January 1946, page 29. (Copy in Div. 55 of Patent Office.)