Sept. 25, 1962 M. T. RUSSO 3,055,542

BOTTLE CARRIER

Filed March 27, 1961 3 Sheets-Sheet 1

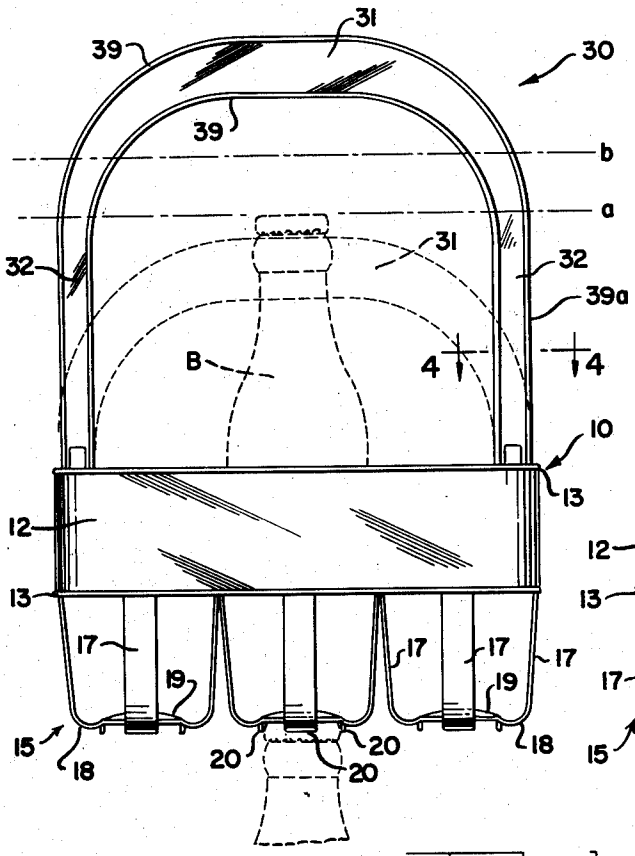

FIG. 1

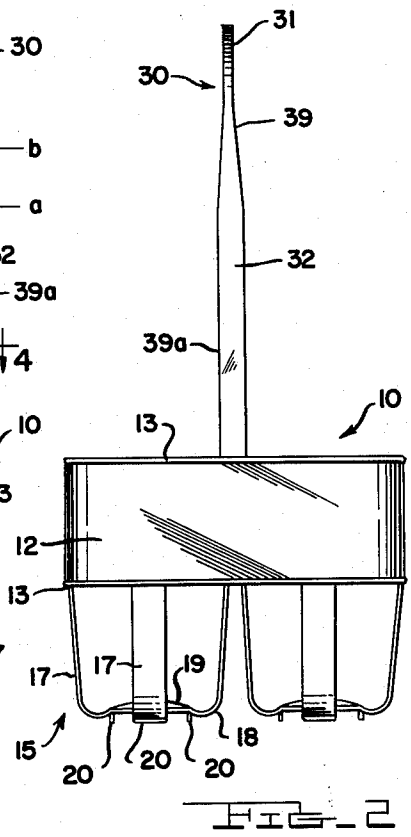

FIG. 2

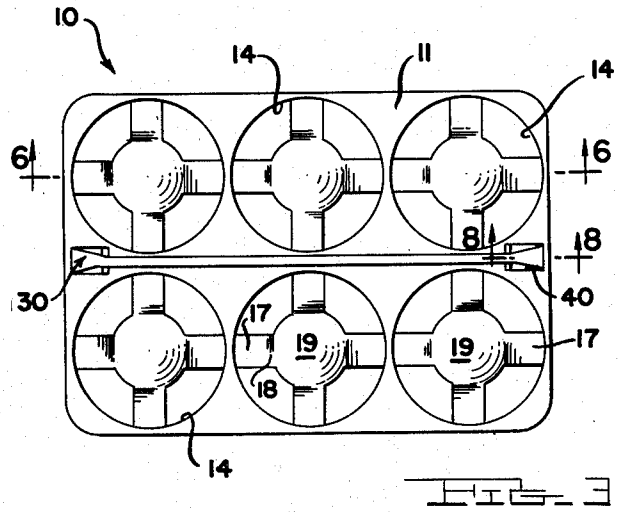

FIG. 3

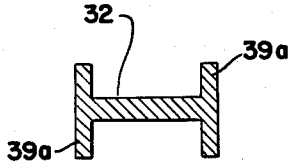

FIG. 4

INVENTOR.

MICHAEL T. RUSSO

BY Cullen & Canton

ATTORNEYS

Sept. 25, 1962 M. T. RUSSO 3,055,542

BOTTLE CARRIER

Filed March 27, 1961 3 Sheets-Sheet 2

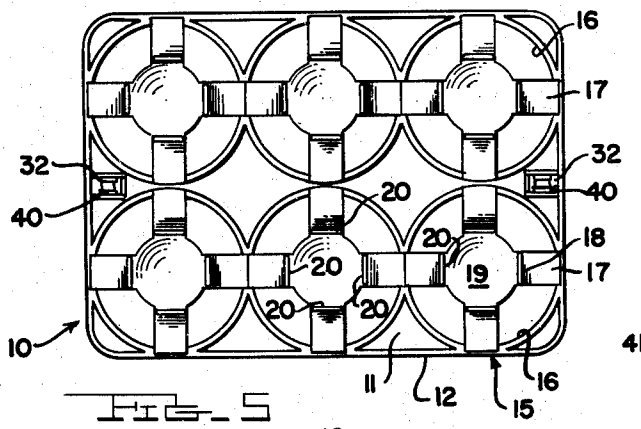

FIG. 5

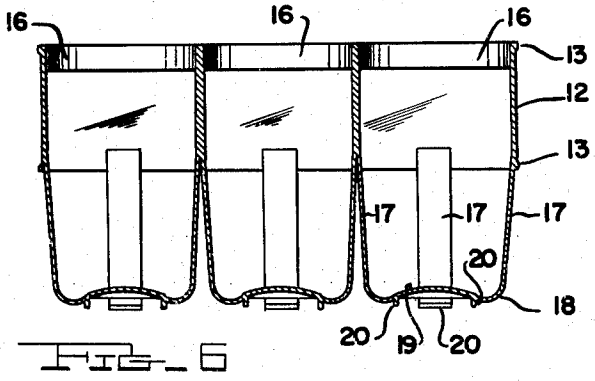

FIG. 6

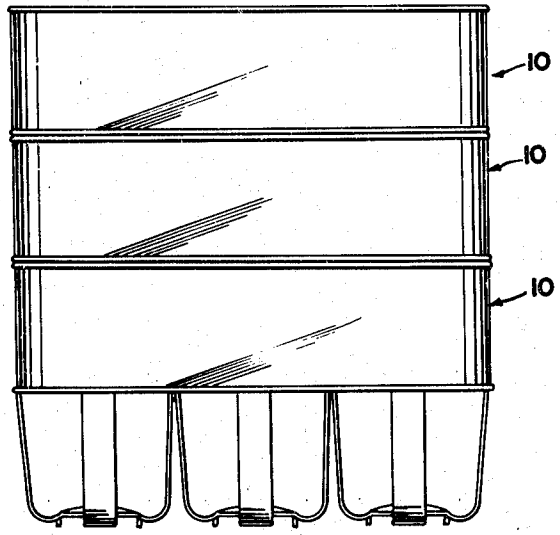

FIG. 7

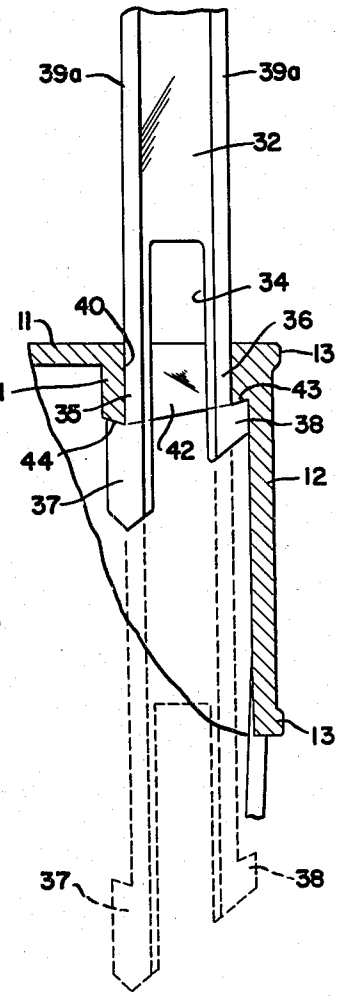

FIG. 8

INVENTOR.

MICHAEL T. RUSSO

BY Cullen & Canton

ATTORNEYS

Sept. 25, 1962 M. T. RUSSO 3,055,542

BOTTLE CARRIER

Filed March 27, 1961 3 Sheets-Sheet 3

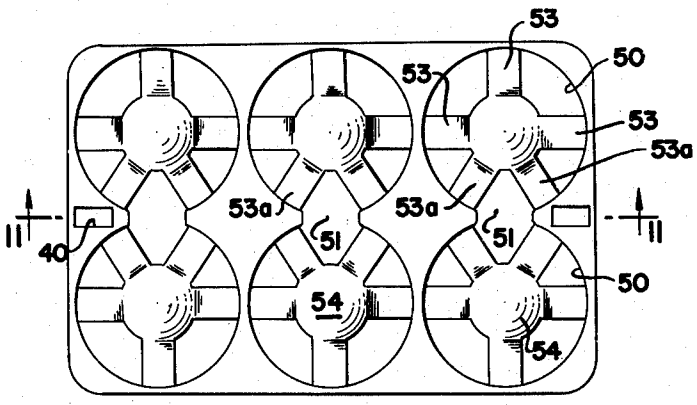

FIG. 10

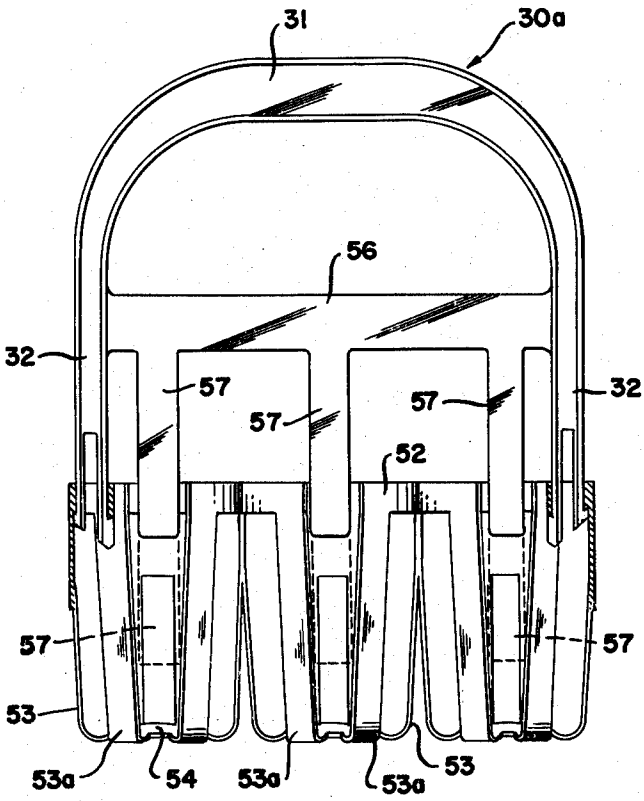

FIG. 11

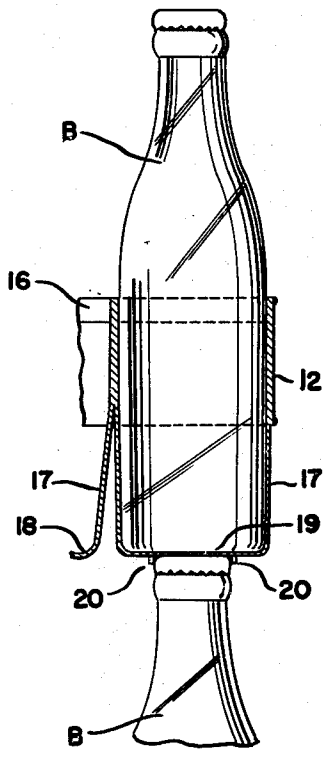

FIG. 9

INVENTOR.

MICHAEL T. RUSSO

BY

Cullen & Cantor

ATTORNEYS

United States Patent Office 3,055,542 Patented Sept. 25, 1962

3,055,542

BOTTLE CARRIER

Michael T. Russo, 2520 Alveston Drive, Bloomfield Hills, Mich.

Filed Mar. 27, 1961, Ser. No. 98,485
5 Claims. (Cl. 220—104)

This invention relates to bottle carriers and more particularly, to a carrier adapted for supporting and carrying a small number of bottles of the type used for soda pop, such as is shown in my copending application S.N. 32,323, filed May 27, 1960.

Soda pop is frequently sold at retail in groups of six arranged in a suitable cardboard carrier which is adapted to support the six bottles together and which is provided with a handle for manually grasping the carrier. These cardboard carriers are relatively expensive, are difficult to store and ship, and being normally shipped while folded flat, they must be assembled before inserting the bottles. Also, they deteriorate easily, and quickly become dirty and torn so that they have only a limited life and frequently can not be re-used.

Hence, it is an object of this invention to form a bottle carrier made of a more permanent material, such as a suitable plastic, which requires no special assembly other than fitting a handle in place, and which is particularly adapted to be stacked for shipping and storage, with one carrier nested within another, and which is immediately available for use merely by pulling the nested carriers apart.

A further object of this invention is to form a bottle carrier with bottle supporting cups which are normally tapered for nesting, but are formed to straighten out or become non-tapered upon insertion of bottles therein, to thus frictionally grip and tightly hold the bottles in place and to separate the bottles, one from the other, and having slotted walls formed of strips, to thus prevent the accumulation of dirt and debris within the cups and provide for ease of cleaning and maintenance, whereby the carriers may be re-used repeatedly and yet remain in a satisfactory, sanitary condition at all times.

These and other objects and advantages of this invention will become apparent upon reading the following description, of which the attached drawings form a part.

In these drawings:

FIG. 1 is a front elevational view of the bottle carrier with a soda pop bottle (shown in dotted lines) within the carrier.

FIG. 2 is a side view of the carrier.

FIG. 3 is a top plan view of the carrier.

FIG. 4 is an enlarged cross-sectional view of a portion of the handle, per se, and taken in the direction of arrows 4—4 of FIG. 1.

FIG. 5 is a bottom view of the carrier.

FIG. 6 is a cross-sectional view taken in the direction of arrows 6—6 of FIG. 3.

FIG. 7 illustrates several carriers stacked or nested together.

FIG. 8 is an enlarged view taken in the direction of arrows 8—8 of FIG. 3 and illustrating the connection between the handle and a socket formed in the carrier, with dotted lines showing the handle in a downwardly position.

FIG. 9 is a fragmentary, cross-sectional view showing

a bottle inserted within a cup, and the cup rested upon another bottle.

FIG. 10 is a top, plan view of a modified carrier, with its handle removed.

FIG. 11 is a cross-sectional view taken on arrows 11—11 of FIG. 10, but with the handle in place.

The carrier 10, is formed of a horizontal, thin, rigid sheet 11 formed in a generally rectangular shape and of a size to fit within the standard wood crates used in the bottling industry for shipping and storage. The sheet has an integral, downwardly depending peripheral edge flange 12, which may have peripheral beads 13 at its top and bottom edges.

The sheet is also provided with six holes 14, arranged in two rows of three each, and each hole has a depending cup 15 formed integral with the sheet or flange.

The cups are formed of top rings 16 (see FIGS. 5 and 6) and walls formed of thin, narrow, strips 17 having their bottom edges turned inwardly at a relatively wide curve 18 and joined to a disc-like enlargement 19 to form the bottom of the cup. Hence, the wall of each cup is slotted instead of being continuous. The bottom disc portion 19 of each cup is dished upwardly and is provided with a downwardly opening socket formed by ribs 20 formed adjacent the peripheral edge of the disc where the strips 17 join the disc. The socket is a size to receive the top of a bottle cap or bottle.

The walls of each of the cups, that is the strips 16 forming the walls, are tapered inwardly from the top to the bottom of the cup so that they are at a very slight angle relative to the vertical. However, when a bottle B is inserted into the cup the strips are sufficiently flexible to yield and straighten out vertically, so as to distort the cup into a substantially uniform cross-section throughout its height as shown in FIG. 9. The bottom of the bottle rests upon the disc bottom 19 and its weight causes the disc to flatten out somewhat, and also causes the curves 18, of each of the strips, to bend more sharply to conform to the bottle so that the bottle not only fits snugly within its respective cup, but also is frictionally gripped by the strips.

Preferably, the carrier is molded in one piece of a suitable plastic which provides the rigidity needed for the horizontal sheet and its flange, but also is sufficiently resilient and flexible in the thin strips 16 to flexibly conform to the shape of the bottles. A number of suitable plastic materials are commercially available for this purpose, and the particular material selected would be within the skill of the art.

The Handle

The handle 30 (see FIGS. 1, 2 and 8) is preferably formed of rigid plastic in an inverted U-shape having its base 31 formed for manually grasping and lifting and two depending legs 32—32.

The bottoms of each leg are notched at 34 to form two fingers 35 and 36 which are springy towards and away from each other, and which terminate in an outwardly extending lug 37 and 38, respectively. One of the fingers is longer than the other to provide for easy insertion into leg receiving sockets 40 formed at each of the opposite ends of the sheet 11. The sockets are each formed of the flange portion adjacent to it, and a wall 41 integral with the sheet and downwardly depending

from it and side walls **42**. A shoulder **43** is formed on the flange **12** and an opposite shoulder **44** is formed by the bevelled bottom edge of wall **41**, the shoulders being formed to engage with the lugs **37** and **38** respectively.

The handle is provided with an edge ribbing **39** at its inner and outer edges, the ribbing being widened at **39***a* along the legs for closely fitting with their respective sockets.

The handle legs are each inserted into their respective sockets by springing the fingers towards each other so that the lugs **37** and **38** slide through the sockets. The handle may be pushed downwardly, through the sockets, into a lower position, as shown by the dotted lines in FIGS. 1 and 8. Likewise, the handle may be lifted upwardly to its top or maximum height position at which point the lugs **37** and **38** engage the shoulders **43** and **44** as shown by the solid lines in FIGS. 1 and 8.

The handle is of a sufficient height so that its base is normally just below the tops of bottles inserted in the cups when the handle is pushed into its lower position and is spaced well above the tops of bottles when in its uppermost position. For example, dashed line *"a"* in FIG. 1 indicated the tops of conventional 6½ ounce bottles and dashed line *"b"* indicates the tops of conventional 10 ounce bottles, with the base **31**, of the handle being spaced well above the tops of the bottles for easy grasping.

The springy finger arrangement makes it possible to ship and store and carriers before installing their handles. The handles are installed simply by pushing their legs downwardly into their respective sockets. However, the handles are difficult to remove from their sockets and thus, a retail customer using the carrier would normally find them too difficult to remove, so that they are not easily removed and lost.

Operation

In operation, the carriers are normally stacked for shipment, as shown in FIG. 7, with their cups nested and without their handles. At a bottling plant, the handles are inserted and the bottles are loaded into the cups, deforming the cups, and thus frictionally retaining the bottles therein. The bottles are separated from each other so that they cannot hit one another and break.

The handles **30** are normally pushed into their down positions, below the tops of the bottles, so that the loaded carriers can be stacked one upon another with the tops of the bottles of one carrier fitted into the sockets of the next above carrier. Hence, the carriers can be stacked quite high, one upon the other, without danger of them slipping or falling.

When the loaded carriers are sold at retail, the buyer simply has to grasp the handle and pull it upwardly so that he can hold the handle conveniently, with his fingers clearing the tops of the bottles. The springiness of the fingers against the socket walls holds the handle in its upper position until it is deliberately pushed down.

Modification—FIGS. 10 and 11

The carrier illustrated in FIGS. 10 and 11, is substantially the same as that described above, but is designed to hold larger size bottles. To reduce width, the holes **50** open into each other at **51**.

The cups are formed with rings **52** and three depending strips **53**, plus two strips **53***a* which are more closely spaced together at the opening between two adjacent cups, the strips connecting to bottom disc **54**.

To insure that the bottles in two adjacent cups do not touch each other the handle **30***a*, which is otherwise the same as handle **30**, is provided with a horizontal brace **56** from which depend three flat fingers **57** arranged to fit into the space between each pair of cups. The fingers are of a sufficient length so as to separate the adjacent pair of bottles regardless of whether the handle is in its up or carrying position or in its down position (see dotted lines in FIG. 11). The brace likewise separates the bottles as well as rigidifies the handle.

This invention may be further developed within the scope of the following attached claims. Accordingly, it is desired that the foregoing description be read as being merely illustrative of an operative embodiment of this invention and not in a strictly limiting sense.

I now claim:

1. A bottle carrier comprising a top sheet having a plurality of regularly spaced apart holes formed therein through which bottles may be downwardly inserted; each hole having a vertically axised, open top, closed bottom cup arranged beneath and in alignment with it with the upper edge of the cup being integral with the sheet; each cup having a thin slotted wall of strip form; the holes and the cups being arranged in two adjacent and parallel rows of three each, with the adjacent pairs of holes in each row opening into each other along a short portion of their peripheries; a vertically movable handle movably mounted in the carrier and arranged in the form of an inverted U-shape having each of its legs removably inserted in sockets at two opposite ends of the sheet, with the legs being vertically slidable upwards and downwards within their respective sockets; a horizontal brace formed integral with the legs of the handle and being spaced above the sheet and having fingers extending down through the sheet between the two rows of holes and formed to slide vertically in the space between two rows of bottles positioned in the two rows of cups, such brace, when moved downwardly with the handle, serving to separate the two rows of bottles from each other.

2. A construction according to claim 1 wherein the strips are so arranged that the strip of one cup faces in opposition the strip of the adjacent cup whereby the bottles in these two adjacent cups are separated from each other by two adjacent strips.

3. A construction according to claim 1 with each cup having an upwardly bulged bottom of convex shape and a thin slotted wall of movable strip form and capable of expansion in the event of expansion of the convex curved shape bulged bottom; said wall being slightly tapered inwardly from its top to its bottom so that the bottom of the cup is of less area than the open top thereof and also of less area than the base of a bottle; the cup wall being resiliently expandable throughout its height by the insertion of a bottle therein into a substantially uniform non-tapered cross-section to snugly and frictionally hold a bottle within the cup the full height of the cup; the convex curved shaped bulge of the cup bottom flattening out under the impact of insertion of said bottle in the cup to cause the cup bottom to expand and thus cause the cup wall to expand.

4. A construction according to claim 1 with each cup having an upwardly bulged bottom of convex curved shape and an expandable side wall formed of a number of thin, flat narrow vertical strips horizontally spaced apart from one another and having their bottom ends bent inwardly towards each other and integrally joined together by the convex curved bulge of the bottom to form the cup bottom, the wall thereby being expandable in response to flattening of the bulged bottom and expansion of the bottom; said wall being slightly tapered inwardly from its top to its bottom so that the bottom of the cup is of less area than the open top thereof and also of less area than the base of a bottle; the cup wall being resiliently expandable throughout its height by the insertion of a bottle therein into a substantially uniform non-tapered cross-section to snugly and frictionally hold the bottle within the cup the full height of the cup; the convex curved shaped bulge of the cup bottom flattening out under the impact of insertion of a bottle in the cup to cause the cup bottom to expand and thus cause the cup wall to expand.

5. A bottle carrier formed of a thin, flat, horizontally arranged sheet having downwardly depending cups integral therewith and opening into the sheet for supporting bottles inserted therein, and a pair of vertically arranged sockets, one at each opposite end of the sheet; a handle in

the form of an inverted U-shape having each of its legs slidably fitted into one of the sockets; the bottoms of each of the legs being vertically notched to form two adjacent locking fingers which are springy towards and away from each other and which terminate in outwardly extending lugs; the legs being downwardly insertable into their sockets by springing the fingers towards each other so that the finger lugs pass through the sockets, the legs being snugly but vertically slidable within their respective sockets, shoulders formed at the bottoms of the sockets for engaging the lugs when the handle is slid to a top position for supporting the carrier upon the handle; the base of the U being located a considerable distance above the sheet, and the legs being of a length so that the base of the U will be slightly below the tops of the bottles inserted in the cups when the handle legs are slid to their most downwardly position and the base of the U will be above the tops of the bottles when the legs are slid to their

most upwardly position for manually grasping the handle base; one of each of the two fingers of each leg being shorter than the other finger thereof and the shoulders being correspondingly located so that all of the finger lugs simultaneously engage the socket bottoms.

References Cited in the file of this patent

UNITED STATES PATENTS

D. 160,608	Jones	Oct. 24, 1950
2,365,914	Stigler	Dec. 26, 1944
2,431,713	Stigler	Dec. 2, 1947
2,821,327	Glazer	Jan. 28, 1958
2,826,332	Hudson	Mar. 11, 1958
2,955,044	Tupper	Oct. 4, 1960

FOREIGN PATENTS

325,360	France	Oct. 17, 1902