Oct. 3, 1944. E. M. BROGDEN 2,359,298

PACKAGE, CONTAINER AND BLANK THEREFOR

Filed Nov. 12, 1938 3 Sheets-Sheet 1

Fig. 1.

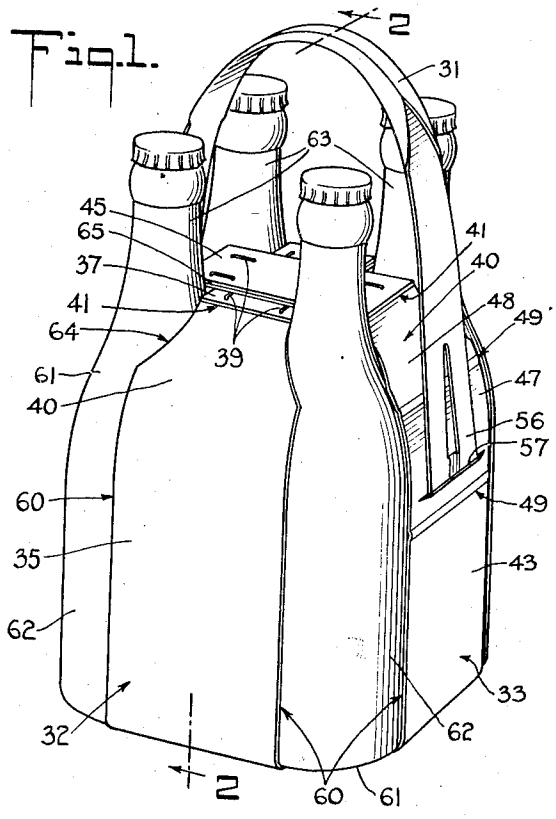

Fig. 2.

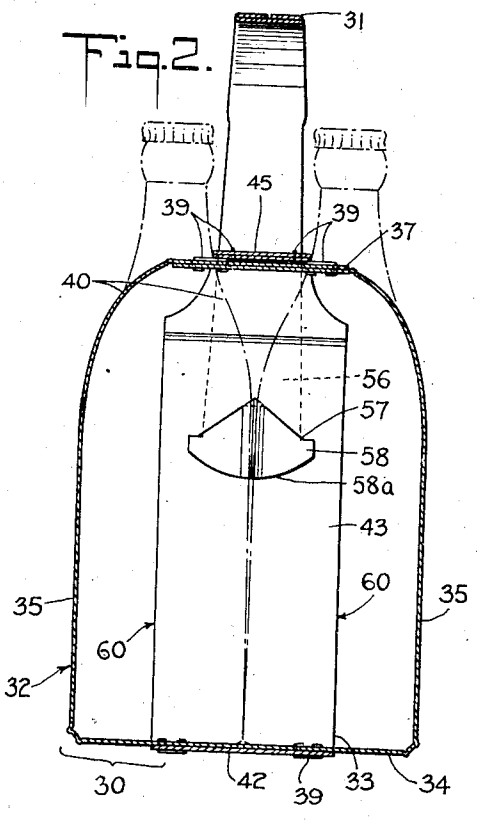

Fig. 3.

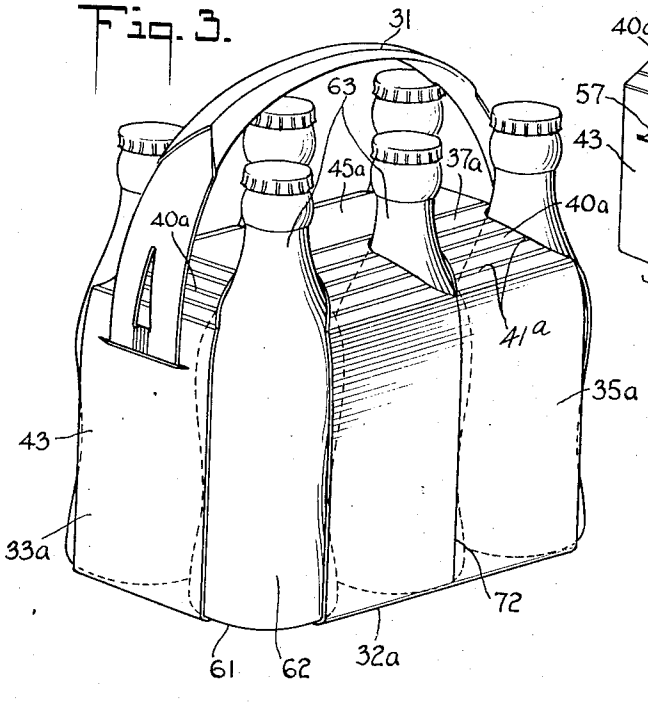

Fig. 4.

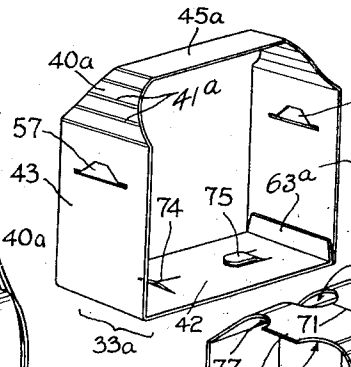

Fig. 5.

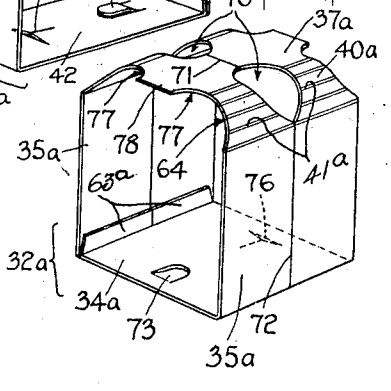

INVENTOR
Ernest M. Brogden
BY
ATTORNEY

Oct. 3, 1944. E. M. BROGDEN 2,359,298

PACKAGE, CONTAINER AND BLANK THEREFOR

Filed Nov. 12, 1938 3 Sheets-Sheet 2

Fig. 6.

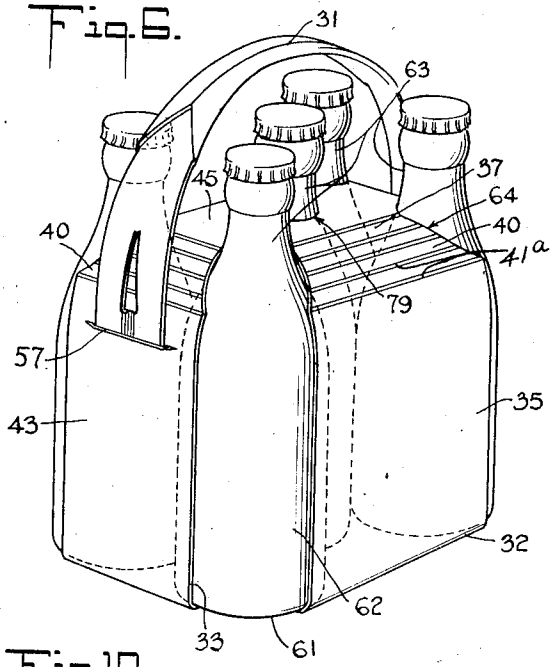

Fig. 7.

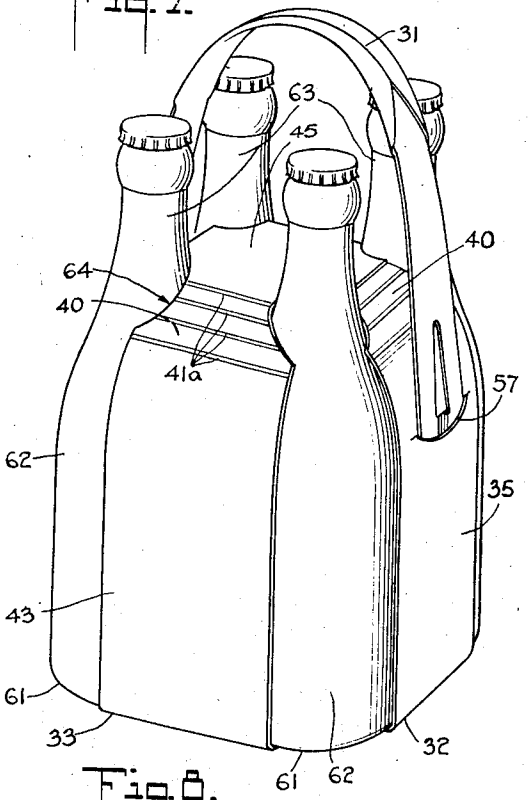

Fig. 10.

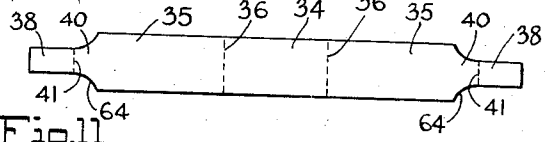

Fig. 11.

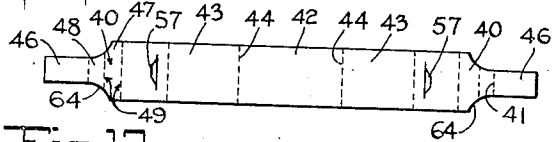

Fig. 12.

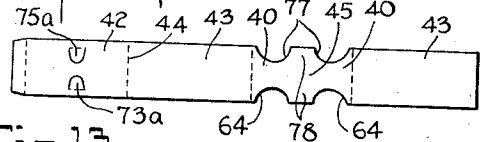

Fig. 13.

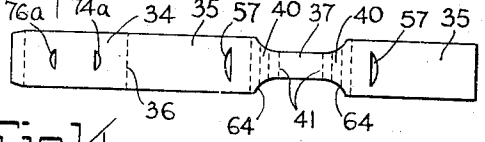

Fig. 14.

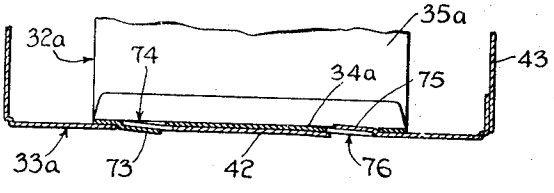

Fig. 8.

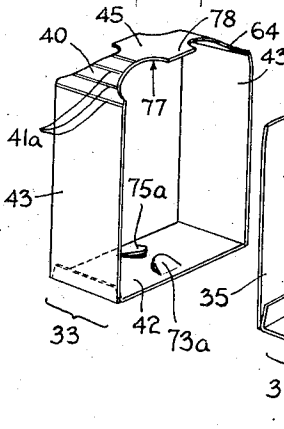

Fig. 9.

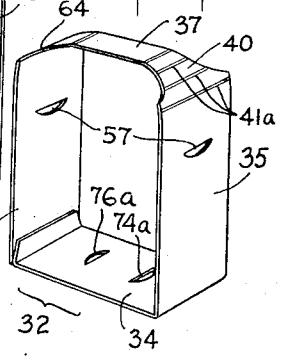

INVENTOR
Ernest M Brogden
BY
ATTORNEY

Oct. 3, 1944. E. M. BROGDEN 2,359,298

PACKAGE, CONTAINER AND BLANK THEREFOR

Filed Nov. 12, 1938 3 Sheets-Sheet 3

Fig.15.

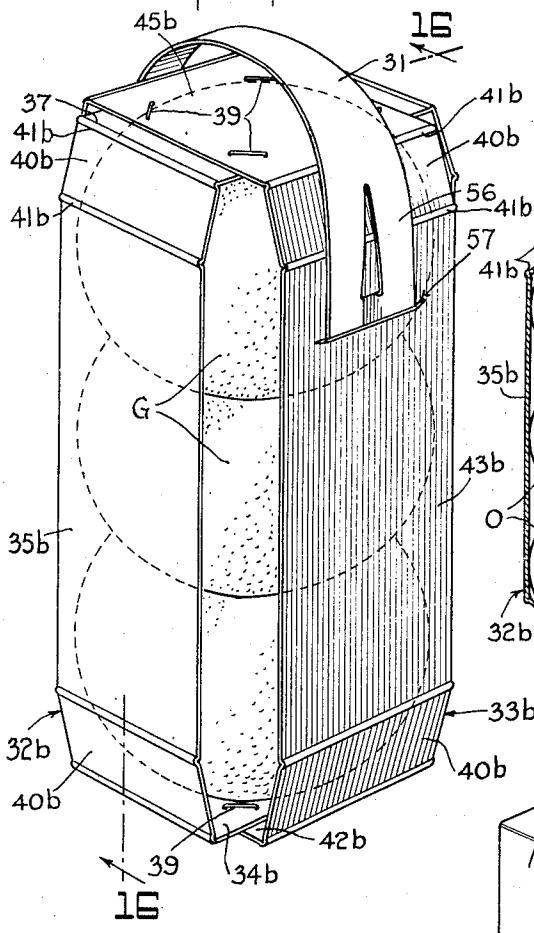

Fig.16.

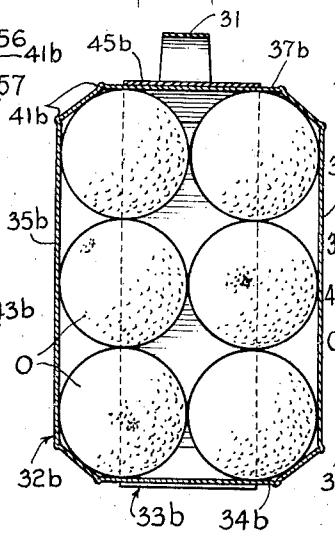

Fig.17.

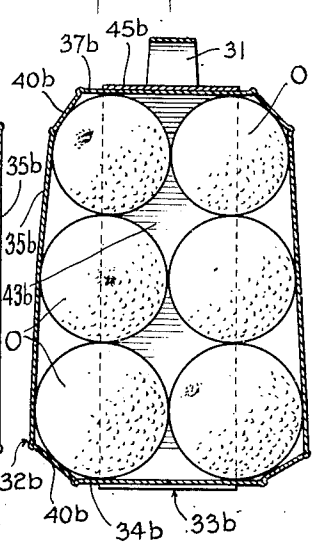

Fig.18.

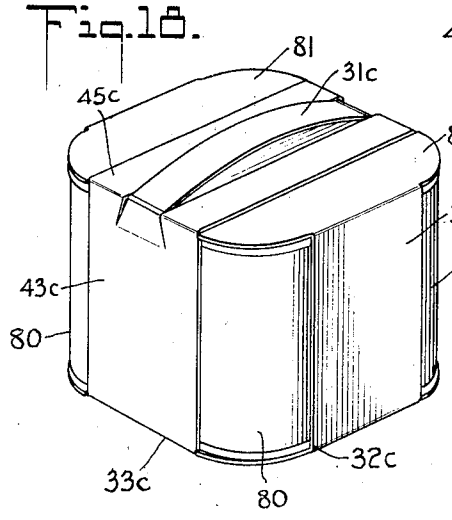

Fig.19.

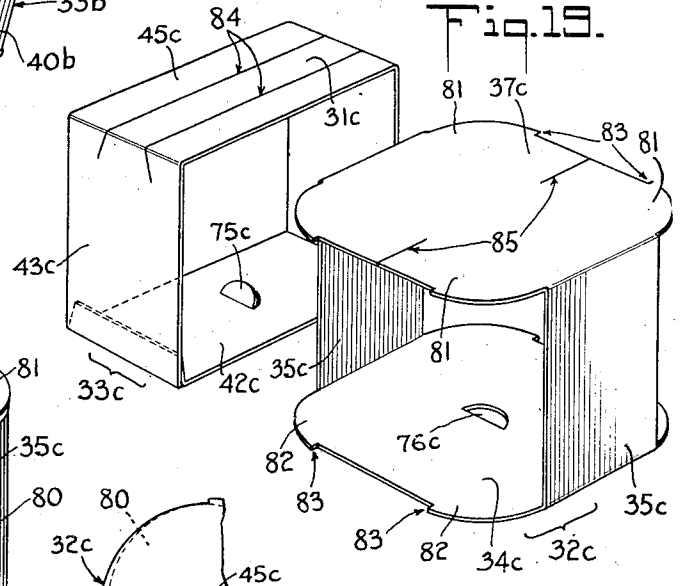

Fig.20.

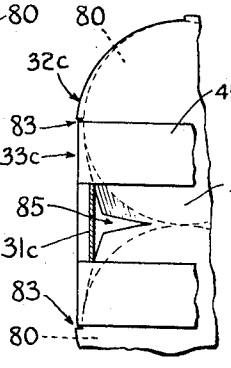

INVENTOR
Ernest M. Brogden
BY
ATTORNEY

Patented Oct. 3, 1944

2,359,298

UNITED STATES PATENT OFFICE

2,359,298

PACKAGE, CONTAINER, AND BLANK THEREFOR

Ernest M. Brogden, Orlando, Fla., assignor to President and Directors of the Manhattan Company (sometimes known as Bank of the Manhattan Company), trustee, New York, N. Y., a corporation of New York

Application November 12, 1938, Serial No. 240,168

11 Claims. (Cl. 229—16)

This invention relates to improvements in packages, containers and blanks therefor and is especially directed to an arrangement suitable for the packaging of consumer units of merchandise in a form suitable for display and carrying, employing a container arranged for construction from paperboard, boxboard, cardboard and similar fibrous sheet materials.

A general purpose of the invention is to provide a packaging arrangement suitable for consumer units of two, four, five, six, a dozen or other appropriate number of merchandise elements or articles such as bottles, cans, pieces of fruit and the like and which will be advantageous in promoting the sale of merchandise in such units, a practice that is generally recognized as desirable. Since the cost of the container or carrier must be added to the cost of the merchandise, it is essential that the total cost of constructing, assembling, packing and handling the container shall be extremely low, necessitating the use of materials that are correspondingly low in cost. A purpose of the invention is to provide a container and packaging arrangement utilizing such material while providing a construction that embodies the necessary strength.

Packages of this type, to be commercially successful, should also conform to a substantial number of requirements in addition to strength and cheapness, including attractiveness of appearance and firm, positive retention of the merchandise. It is also highly desirable that such packages be provided with suitable handles for convenience in carrying, that they expose the merchandise for attractive display thereof without manipulating the container, and that they include suitable provision for applying descriptive or advertising matter to exposed surfaces of the container. An important object of this invention is to provide a container that combines all these characteristics. A feature of the invention is the provision of a package which may readily be packed and unpacked without the use of any special closure or locking structures. Another feature is the provision of a substantially rectangular package in which an odd number of columnar articles, such as bottles or cans, may be packed.

Certain types of merchandise such as fruit vary substantially in size, and it is necessary for the producer to keep on hand a large number of container sizes. An important advantage of the present invention is the provision of a container which is variable in size without any adjustment or substitution of parts, so that the same container may be employed for merchandise articles varying within certain limits both in size and in contour. Moreover, such container is particularly adapted for packing articles, such as fruit, which are non-spherical, since the container will automatically adjust its proportions to accommodate variations in the relationship between the longitudinal and transverse diameters of the articles packed therein. This feature is particularly advantageous where it is desired to pack articles of assorted sizes in the same container, since the container is capable of adjusting itself to a group of such articles packaged therein and varying in group diameter at different points.

The invention includes features which are particularly advantageous for the packaging of certain types of merchandise. It is especially applicable to the packaging of bottles, which present special problems due to their contour, their frangibility, and the arrangement of decorative and advertising matter thereon. A feature of the invention is the provision of a package in which the bottles (or a substantial proportion of them) are exposed throughout their full length, while holding the bottles in snugly packed condition, particularly during carrying, and facilitating insertion and removal of the bottles without the manipulation of special closure or locking devices. In particular, the package provides exposure not only of a substantial part of the usual body labels, but also of labels and decorative tinfoil on the necks, producing a most attractive display of the decorative and advertising features applied to the bottle but ordinarily obscured to a great extent by former types of container. Furthermore, the bottles may be inserted and removed from the container without subjecting tinfoil on the necks thereof to dislocation or rupture by passing such necks through container apertures as in prior arrangements.

A characteristic of the invention is the provision of a novel arrangement for gripping bottles at the corners of the merchandise group while exposing such bottles for display and removal, such gripping effect being exerted particularly when the package is carried and a firm grip on the bottles is most necessary, and being sufficiently released when the package is set down so that the removal of individual bottles is facilitated. A special arrangement for engaging and locking the neck portions of the bottles may be provided, including a reinforcement of the portion of the container engaging the necks to provide adequate strength and distribution of bottle

pressure against the edges of the container material.

The invention provides improved transverse support and bracing of the articles by engagement of the container with the necks or other projecting portions of the packaged articles. This feature may be utilized to maintain the upper portions of bottles in spaced relationship without requiring the provision of special interposed spacing or cushioning members between the bottles.

The invention is also applicable to canned goods and the like, and the container for this purpose may be constructed to provide rapid and easy packing and an attractive display of the labels on the sides of the cans while the unsightly ends of the cans are covered by portions of the container which are available for advertising or decoration.

An important feature of the invention is the provision of a package of the type indicated which is in the form of a generally rectangular prism free from projections which would interfere with the ready packing of such packages in series without waste of space, permitting likewise the stacking of such packages in tiers without requiring the use of substantially greater space than that necessary for the merchandise itself. The invention also provides protection of the merchandise against direct contact with flat surfaces engaging the bottom or sides of the package by interposing portions of the container between the merchandise and such surfaces. This arrangement is particularly useful in preventing contact between bottles of different packages when packed or stacked against each other.

A specific feature is the design and arrangement of the container parts and the handle so that they may readily be cut out of sheet material, and particularly material of the type indicated, with the use of a minimum amount of such material. Another feature is the arrangement of the container parts so that the containers may be rapidly and economically assembled and packed.

Other objects, advantages and desirable features of the invention will appear from the following description considered in connection with the accompanying drawings, in which

Fig. 1 is a perspective view of a package containing four bottles;

Fig. 2 is a transverse vertical section on line 2—2 of the container shown in Fig. 1;

Fig. 3 is a perspective view of a similar package containing six bottles;

Figs. 4 and 5 are perspective views of the two tubes forming the body of the container shown in Fig. 3;

Fig. 6 is a perspective view of a modified form of package containing five bottles;

Fig. 7 is a perspective view of a package containing four bottles in a modified type of container;

Figs. 8 and 9 are perspective views of the tubes forming the body of the container shown in Fig. 7;

Figs. 10 and 11 are plan views, on a much reduced scale, of the blanks for the tubes forming the body of the container shown in Figs. 1 and 2;

Fig. 12 is a plan view, on a similar scale, of the blank used for forming the tube shown in Fig. 8;

Fig. 13 is a plan view, on the same reduced scale, of the blank used for forming the tube shown in Fig. 9;

Fig. 14 is a fragmentary vertical section through an arrangement for locking the two tubes together at the bottom;

Fig. 15 is a perspective view of a package of fruit;

Fig. 16 is a vertical section on a reduced scale through the container shown in Fig. 15 on line 16—16 of said figure, showing the container employed for packaging a group of smaller fruit;

Fig. 17 is a view similar to Fig. 16 showing the same container employed in packaging fruit of different sizes;

Fig. 18 is a perspective view of a package of cans;

Fig. 19 is a perspective assembly view of the tubes forming the body of the container shown in Fig. 18; and

Fig. 20 is a fragmentary plan view of the top of the container shown in Fig. 18 with the handle broken away.

The invention is primarily applicable to the packaging of a plurality of merchandise articles or elements arranged in a compact prismatic unit or group. In certain embodiments it is particularly suitable for packing generally columnar elements, such as bottles, cans or a plurality of articles of similar contour stacked on each other. In this arrangement the merchandise group preferably is of substantially rectangular prismatic form, and the container is arranged to engage each of the six sides of the merchandise group and thereby confine the merchandise while exposing corner portions of the group for display and the like.

In the preferred embodiments of the invention described herein the container comprises a body portion composed of two tubular members encircling and confining the merchandise group, each member extending across the top, bottom and opposite sides of the group. Said members extend around the group substantially at right angles to each other, and are preferably interconnected at one of the zones of intersection at the top and bottom of the group to maintain uniform spacing between adjacent margins of the members at the intersections of the side faces of the merchandise group when the container is in use.

A handle is mounted in circumferentially extending position on one of the tubular body members and advantageously is adapted for separable connection thereto. In a particularly desirable form, the adjacent margins of the body members are spaced at the lateral corners of the group to expose the merchandise at such corners, ordinarily throughout its entire vertical length; but such margins are spaced and proportioned at each of such corners to provide adequate retention of the articles of merchandise spanning the corners. In the best embodiments of the invention, such spacing is moreover correlated with the stiffness and flexibility of the material and the contour of adjacent member margins, so that although the corner articles are securely held in position against accidental dislodgment, they are held yieldably and may be withdrawn without rupturing the container. This feature of the invention may be applied to the packaging of bottles, and in particular includes an arrangement in which the bottles are thus yieldably held with neck portions projecting beyond the top of the container body.

A number of practical embodiments of the invention are illustrated in the drawings. In the form shown in Figs. 1 and 2 the package is arranged to carry four bottles. The container con-

sists of a body indicated generally at 30 and a handle 31, both preferably formed from paperboard, boxboard, cardboard or other similar stiff sheet material. The body 30 consists of an inner tubular member 32 and an outer tubular member 33, each of which may be cut from a single sheet of said material, as indicated by the blanks for these members shown in Figs. 10 and 11. Inner member 32 includes a bottom section 34, side sections or lateral retaining members 35 connected to bottom section 34 at parallel bending lines 36, and top section 37 connected to side sections 35. When the inner member 32 is constructed from a single sheet, the ends of the blank are connected in suitable manner, and may be located at any suitable point in the series of sections forming said member. In the construction illustrated in Figs. 1 and 10 the blank is provided with two top segments 38 which are overlapped and permanently joined as by staples 39, gluing or other method of attachment to form part of the top section 37.

Top section 37 is joined to side sections 35 by suitable bends which may be right angle bends or, more desirably, may include intermediate convex connecting portions 40 between the flat central zone of the top and side sections. Such connecting portions may be suitably shaped and arranged to follow the contour of the portions of the merchandise contacted thereby as closely as seems desirable. By employing material having the requisite stiffness and resilience, and spacing such convex connecting portions slightly from the merchandise, the resilience of such portions will compensate for variations in the size or proportions of different articles and provide a certain inward pressure on the merchandise. The connecting portions may be curved, with or without the use of suitable bending lines depending upon the nature of the material, and when employed in packaging bottles, preferably merge smoothly with the flat central portions of the top and lateral sections, providing an attractive appearance and firm engagement with the curved portions of the merchandise.

The outer tubular member 33 is composed of a bottom section 42, end sections or lateral retaining members 43 connected to bottom section 42 at parallel bending lines 44, and a top section 45. Outer member 33 may be constructed from a single blank with connected ends in the manner described in connection with inner member 32. In the form illustrated in Figs. 1, 2 and 11 the ends of the blank for the outer member consist of top segments 46 which are superposed to form a part of top section 45 and are permanently connected to each other in any suitable manner as by means of staples 39, gluing or other suitable means.

The portion 40 of the outer member 33 connecting the top section 45 and end sections 43 may likewise be deflected or curved to follow the contour of the merchandise as already described in connection with inner member 32. In the form illustrated, said portion 40 of the outer member 33 is divided into panels 47 and 48 by bending lines 49 parallel to lines 41 and preferably located substantially in alignment with points at which the contour of the merchandise requires a substantial change in the plane of each end section 43. Panel 48 may be connected to the central flat portion of the top section 45 at another parallel bending line 41. It will be evident that the connecting portions 40 of the inner tubular member 32 may be similarly scored for bending if desired.

The tubular members 32 and 33, both of which are permanently continuous in the construction shown, are arranged with their top sections 37, 45, and bottom sections 34, 42, superposed or overlapped and substantially at right angles, with the lateral margins of the side and end sections or lateral retaining members 35, 43, equally spaced horizontally at the corners of the container to provide uniform display openings. For certain types of merchandise, and particularly bottles and the like, it is desirable to provide means connecting said members for preventing relative movement of the members after they are packed, particularly in a rotary or diagonal direction which would tend to vary the spacing between the lateral margins of the side and end members at the container corners, since it is of primary importance to maintain even spacing at these points in order to assure uniform and positive retention of the merchandise of the type indicated. One arrangement suitable for this purpose includes the interconnection of the bottom sections 34, 42. This may be accomplished in various ways, the form illustrated in Figs. 1 and 2 being provided with staples 39 connecting the bottom sections. In this form however the top sections 37, 45, preferably are not connected, since relative movement between the latter sections facilitates the insertion and removal of the bottles as hereinafter set forth. As is apparent, the composite flat top and bottom members of the illustrated bottle carrier, formed by sections 37, 45, and 34, 32, respectively, are parallel, the bottom member being somewhat wider in both directions than the top member.

The handle hereinabove mentioned is connected at its ends to the container body and is preferably arranged to extend longitudinally of the series of sections forming one of the tubular body members; in other words, the handle extends circumferentially of the tube. The handle ends are attached at spaced points to said member so that when the package is lifted by the handle the tension exerted by the handle ends will tend to constrict the tubular member carrying the handle and to press the merchandise inwardly into snug tightly packed condition. The handle ends are preferably attached to opposite sections of the member; and where the handle is formed of sheet material of the type indicated, its ends preferably are connected to such sections by a detachable arrangement, so that the handle may be formed separate from the members constituting the container body, though obviously the invention in its broader aspects is not limited to this arrangement. In the constructions shown in Figs. 1 and 2 the handle 31 is provided with end portions 56 constituting tongues insertable in slots 57 in end sections 43 preferably adjacent the upper ends of said sections. Each end portion 56 is provided with lateral barbs 58 and laterally projecting web 58a or other suitable means engaging the upper margin of the registering slot 57 when the handle is in its uppermost position as illustrated in the drawings (e. g., Figs. 1–3). Various constructions of this type are available and may be employed, the particular form illustrated herein being of a novel and especially desirable type more fully disclosed and claimed in application Serial No. 240,167, filed by E. M. Brogden on November 12, 1938, now Patent No. 2,289,824.

The container is particularly suitable for packaging a plurality of parallel columnar articles arranged in pairs with their ends in register.

When more than one pair of articles is packaged the pairs are positioned in rectilinear series, forming two parallel rows of articles; though it will be understood that the invention is not limited in its broader aspects to ths arrangement. The end articles of each row are located in the corners of the package, and each of such corner articles is engaged by marginal portions of the contiguous side and end sections **35**, **43**, as already set forth. Each of said side and end sections extends at its lateral margins at least to the middle of the adjacent sides of the end merchandise elements contiguous to said section, and preferably slightly beyond such centers, at least at some point in each lateral margin, it having been found that a projection of from one-eighth to one-half inch beyond said center is adequate for secure retention of the articles when packaging bottles or cans of the usual sizes. Each article so retained thus spans a display opening of which the width may be, as in the present example, not much less than the diameter of said article, and which is substantial in any case.

When the container is employed for packaging bottles, special provision is made for firmly engaging the bottle necks, preferably without extending the container completely around the necks of the corner bottles. In this construction each of the lateral sections, which consist of the side sections **35** and the end sections **43**, extends upwardly along the body **62** of the adjacent bottle **61** approximately to the bottle shoulder or base of the tapered neck portion, and is of such sufficient width that at least an upper part of each of its lateral margins **60** extends to or, most desirably, slightly beyond the center lines of the respective rows of bottles of which the adjacent corner bottles are the end members. The marginal portions **40** of the top sections **37**, **45**, connecting said sections with the lateral sections of the container body are so contoured laterally that, in the assembled package, they are bent or curved at the bottle shoulders, with their edges also following the curvature of the bottle necks **63** and snugly engaging the same. To this end, the edges **64** of said connecting portions **40** are given the proper curved outline, in cutting the blanks shown in Figs. 10 and 11. Thus, in the assembled package, said connecting portions **40** maintain continuous engagement with the adjacent bottle necks, or at least contact therewith at points relatively close to each other, so that the necks are firmly held together thereby. The contour of edges **64** is preferably designed, in a given instance, with reference to bottle necks having a particular curvature so that the circumferential curve of connecting portions **40** will be relatively smooth and slightly, and said portions will meet the top and lateral sections in a smooth curve or at a relatively slight angle.

This arrangement provides not merely vertical retention of the bottles but also lateral support thereof. It likewise provides a retaining structure for each corner bottle extending around more than half the circumference of the bottle neck **63**, maintaining a firm grip on said neck and the shoulder of the bottle, while yieldable and resilient to permit withdrawal of the bottle as hereinafter set forth. The upper parts of the bottles may be restrained from movement toward each other in any direction, either crosswise or lengthwise of the package, by engagement with intervening flat central top portions of the container body extending in a direct line between the points of engagement with adjacent bottle necks, arranged so that transverse pressure on a bottle neck is transmitted in an edgewise direction to such intervening portions of the body, subjecting such portions to compression in the plane of the material. This arrangement permits adequate transverse bracing of the bottle necks with material of relatively cheap grades.

This feature may be utilized to hold the upper portions of the bottles in spaced relationship both longitudinally and transversely of the package, by appropriately proportioning the top portions of the body interposed between adjacent bottle necks (Fig. 2). In this arrangement the bottles, although compactly grouped in practically tangential relation, are not actually in contact with each other except in a restricted zone adjacent their bottoms, where they may be held in firm and secure contact with each other by the side and end sections **35**, **43**, of the body, providing an unusually firm package with minimum risk of damaging the bottles by contact with each other. This arrangement may impart a slight upward batter or flare to the sides and ends of the package when the bodies of the bottles are substantially cylindrical, due to the resultant slight tilting of the corresponding bottle axes out of vertical, but this effect will generally be so slight as to be unnoticeable.

The curvature of portions of the body intervening between adjacent bottle necks, such as connecting portions **40**, likewise serves to stiffen the material in the line of thrust between such bottles, since the curvature is transverse to such line and substantially prevents any possibility of buckling along said line. The curved portions **40** constitute, broadly speaking, part of the container top.

In the specific example illustrated in Figs. 1, 2, 10 and 11, side margins of the top sections **37**, **45**, are arranged to form a notch or recess **65** at each corner of the container, each recess **65** having margins engaging a bottle neck **63** at spaced points and merging with the edges **64** to provide a unitary recess or socket for said neck. That is, the top sections **37**, **45**, have relatively straight side edges and each of the recesses **65** forms substantially a right angle. Since each of said top sections includes a double thickness of material in this embodiment, the side margins of said top sections provide a particularly strong lateral support for the bottle necks **63** against inward pressure, thereby relieving the bottle bodies **62** of a substantial portion of the stresses due to lateral impact or pressure on the package.

It will be seen from the foregoing that, in the construction illustrated in Figs. 1, 2, 10 and 11, each of the neck and shoulder receiving recesses or laterally open apertures extend upwardly into the container top in continuation of the elongated corner openings formed by the marginal spacing apart of the upright lateral body sections of the container at each corner.

The embodiment illustrated in Fig. 1 may be modified in various ways, and for instance may be arranged for the packaging of various numbers of merchandise articles or elements. One modification of this type is illustrated in Figs. 3–5, and includes a package of six bottles. The general construction and arrangement of parts is similar to that described in connection with Fig. 1 and will not be set forth in detail. In this instance, the ends of the blanks, from which the body members **32***a* and **33***a* are respectively set up, are overlapped and fastened together by gluing,

as indicated at 63a. The principal difference in structure involves the provision of additional intermediate apertures 70 in the container. Apertures 70 are shown as located partly in top sections 37a and partly in connecting portions 40a of the inner body member 32a, though their lateral extent is naturally dependent upon the size and proportion of the bottle neck 63. The top section 45a of the outer body member 33a may be arranged and proportioned to engage the inner sides of opposite bottle necks 63, thereby providing a reinforced lateral support for said necks against inward pressure thereon. In the arrangement illustrated, the section 45a of outer body member 33a has rectilinear edges which are substantially tangent to said necks in the assembled package. Connecting portions 40a of both inner and outer body members are desirably provided with parallel score or bending lines 41a to facilitate conforming the curved aperture-bounding edges of these portions smoothly and snugly about the necks and shoulders of the bottles which they engage.

For convenience in inserting and removing bottles 61 the inner member 32a may be transversely divided by slit 71, and the side sections 35a may be divided by vertical slits 72 extending from apertures 70 downwardly along said side sections and preferably substantially to bottom section 34, an arrangement which in effect divides member 32a above bottom section 34a into two separable halves, which may be deflected to facilitate direct insertion of a bottle through aperture 70 and slits 71, 72 at each side of the container, the material of which member 32a is constructed being sufficiently flexible to permit this operation without rupture of said member.

This embodiment includes another arrangement for connecting the bottom sections 34, 42, comprising in general a tongue and slot structure arranged to prevent deviation of the body members 32a, 33a, from their proper relative position at right angles to each other. For this purpose the inner member 32a is provided with a tongue 73 extending through slot 74 in the outer member 33a (Fig. 14) while the latter member has a tongue 75, passing through slot 76 in member 32a. Tongues 73, 75 fit snugly between opposite ends of slots 74, 76, to prevent lateral movement therein and preferably are located at substantially spaced points to provide secure retention of said body members in proper relative position.

It will be noted that in this embodiment also the lateral margins of the top section 37a adjacent the ends of the package and lying between the longitudinal rows of bottle are curved to follow the contours of the adjacent inner surfaces of necks 63 of the corner bottles, substantially to points on the line between the axes of each pair of end bottles of the rows, thereby providing direct transverse support for the bottle necks which supplements the support afforded by the top section 45a of the outer body member 33a. The construction includes curved edges 77 (Fig. 5) forming continuations of the edges 64 of connecting portions 40a and defining a tongue 78 extending between opposite bottle necks 63 in transverse supporting engagement therewith.

It will be apparent that embodiments of the invention constructed along the lines already set forth may be arranged by a simple multiplication or extension of parts to accommodate any even number of bottles or other columnar articles. It sometimes is desirable, however, to package an odd number of bottles; and an arrangement suitable for the purpose is illustrated in Fig. 6. The general construction of the container and package is similar to that of the forms already set forth in detail; but if the package is designed for five bottles, registering apertures 79 located centrally in top sections 37 and 45 are arranged with margins engaging the neck of a bottle positioned intermediate the two end pairs of bottles and preferably arranged with its body 62 bearing against the bodies of the four corner bottles. It will be apparent that the constricting action of the body members 32, 33 will lock the corner bottles in place and thereby hold the central bottle firmly in position. Score or bending lines 41a in the connecting or shoulder sections 40 are desirably provided, as in the case of the container illustrated in Figs. 3–5.

The arrangement shown in Figs. 7–9 is similar to the construction illustrated in Figs. 1 and 2, but, like those of Figs. 3–6, includes a plurality of score lines 41a in the connecting portions 40 of both body members. Outer tubular member 33 includes a top section 45 with lateral margins provided with curved edges 77 and tongues 78 similar to those shown and described in connection with Figs. 3–5. In this arrangement the ends of blanks for said members 32, 33 (Figs. 12 and 13) are overlapped at one end of each bottom section 34, 42, and appropriately secured as by gluing, the arrangement providing an unusually neat and strong contour for four bottles, especially for bottles of relatively large size, each bottle being exposed over a substantial portion of its periphery throughout its entire length, the body members spanning completely the spaces between the sides and necks of the bottles, much as in the case of the packages of Figs. 3–6, to provide an especially compact neat four-bottle package affording ample opportunity for the application of advertising, ornamentation or descriptive matter in prominent locations on the package.

A slightly different tongue and slot connection between the bottom sections 34, 42, includes opposed tongues 73a, 75a struck up from bottom section 42 of the outer tube, and registering slots 74a, 76a in bottom section 34 of the inner tube. In this arrangement both tongues may be held in locked position within the container by the merchandise.

The invention, while including certain features especially advantageous in connection with the packaging of bottles and cap-sealed cans or other articles of similar type and contour, includes broad features applicable to other types of merchandise. In particular, it is adapted for the packaging of fruit or other merchandise units which are not elongated, but which may be piled or stacked to form composite elements which may be packaged in arrangements similar to those already described, such elements being considered as composite articles for purposes of convenient description herein.

An exceptionally simple and effective embodiment of this type, suitable for the packaging of fruit, is shown in Fig. 15. It includes inner body member 32b and outer body member 33b, each of which may be formed of a single strip of sheet material preferably with parallel lateral edges. The body members 32b and 33b overlap at right angles at the ends of the package and are suitably connected to each other for purposes already set forth. This may be readily accomplished by staples 38, gluing or other means; and the ends

of the blank forming each member may be overlapped at the top or bottom of the package and held in place by said staples. The lateral margins of members 32b and 33b are spaced at the lateral corners of the package, and the side and end sections 35b, 43b are proportioned and arranged in the manner already indicated.

The connections between the top and bottom sections and the lateral sections in this embodiment may be suitably designed for various types of merchandise, a substantially right angle connection being adapted to provide a space beneath the line of connection which will permit the margins of the sections to yield and flex inwardly to accommodate slightly larger pieces of merchandise than the size for which the container was designed. A similar effect, together with a somewhat neater package for certain purposes, is provided by employing connecting sections 40b, which may be flat panels integral with the adjacent sections along bending lines 41b. When generally spherical fruit is packaged this arrangement permits the top and bottom sections to conform neatly to the fruit contour while providing a space beneath said sections along bending lines 41b which permits the portions of the body members adjacent said lines to flex as may be necessary to accommodate slightly larger sizes of fruit. The handle 31 is preferably constructed and mounted in the manner already set forth, and can be collapsed to lie flat against the subjacent face of body member 33a by sliding the handle end portions 56 downwardly through slots 57.

A feature of this type of container and package is its adaptability to different sizes and shapes of fruit or similar articles. The embodiment shown in Fig. 15 is illustrated with three grapefruit G packed in the container, but obviously the same container will hold four vertical rows of oranges O of appropriate size, each row extending along a corner of the container from the top to the bottom of the packages. Moreover, the container may readily be manipulated to increase its transverse diameter and decrease the distance between the top and bottom sections, or vice versa. For instance, the grapefruit package of Fig. 15 requires a relatively long narrow package. When it is desired to use the container for packaging a dozen oranges O, arranged in the manner indicated, with three oranges at each corner, its proportions must be changed, as the group of oranges is wider but not so high as the group of grapefruit. By bringing the top and bottom of the container closer together the sides and ends of the container are spread apart and the container is adapted to the packaging of the oranges, as illustrated in Fig. 16.

This flexibility of the container structure likewise permits its use for packing articles of different sizes arranged in a group varying in transverse diameter between the top and bottom of the group. One arrangement of this type is illustrated in Fig. 17 in which the container is packed with successive layers of oranges each superposed layer containing oranges of smaller size than those in the layer beneath it. In this arrangement the top connecting portions 40b are swung inwardly from the position shown in Fig. 16 to contact the smaller fruit while the lower connecting portions 40b swing outwardly to permit the side and end sections 35b, 43b to fit the larger fruit at the botom. Obviously the largest size fruit may be in any desired layer, the other layers preferably being of progressively reduced diameter.

Regardless of these variations in size it will be noted that the container maintains firm engagement with each layer of fruit and the like and that the marginal spacing at the lateral corners of the package, though varying in accordance with variations in the diameter of different layers of fruit, will be substantially less than the diameter of each layer in the zone of engagement with such layer, and will serve to retain the fruit securely while exposing it at the corners of the package.

The invention is likewise applicable to cans or other columnar articles having relatively flat ends. An embodiment of this type is shown in Figs. 18–20. The simple two-tube arrangement shown in said figures facilitates wide variations in the contour and proportions of various parts of the container body structure to conform to a wide variety of articles of merchandise and conditions of packing or use. When employed with cans of the usual type, it is desirable to cover the relatively unsightly ends of the cans to provide a neat package, a result readily obtained with this invention. In the illustrated embodiment this is accomplished by providing the top section 37c of the inner tubular member 32c with extended lateral marginal portions 81 preferably curved at the corners of the section to follow the contour of the can rim and rest upon said rim while the intermediate edges of marginal portions 81 are substantially tangent to the rims of the end cans. Bottom section 34c is likewise provided with lateral margins 82 similar to the margins 81 of the top section in arrangement and contour.

This construction may likewise be utilized to hold the outer tubular member 33c against rotary or diagonal movement relative to the inner member 32c. For this purpose the outer edges of the lateral margins 81 and 82 are parallel and extend to the bending lines between the sections of the outer tubular member 33c. The merchandise is preferably arranged to maintain said margins 81, 82 in this position; for instance, the rims of cans 80 bearing against said margins serve to hold said edges in position along the designated bending lines.

Means may be provided for maintaining the members 32c and 33c in registered position. As indicated in Figs. 19 and 20, the bottom section 42c of the outer member 33c may be provided with a tongue 75c engaging a slot 76c in the bottom section 34c of inner tubular member 32c. Slot 76c may be proportioned and arranged so that it will overlie tongue 75c when the outer tubular member 33c is in proper position, so that said tongue may readily be bent upwardly into operative position with its ends engaging opposite margins of the slot. The slot 76c should be located when practicable beneath a suitable recess in the merchandise, such as the central space between the rims of cans. This construction permits rapid and easy assembly of the container, and retains the tubes effectively in registered position.

Another arrangement for the same general purpose is illustrated for convenience in the same embodiment, and includes shoulders 83 on the lateral margins 81, 82 engaging opposite edges of the outer member 33c, the material being sufficiently flexible to permit said shoulders to be flexed inwardly while the outer member 33c is forced over the inner member 32c, the flexed shoulders springing outwardly when the outer

member is in position, and engaging the rear edges of said member.

While a detachable handle has been illustrated in connection with the containers shown in Figs. 1–17, it will be apparent that various other types of handles may be employed within the broader scope of the invention. One arrangement of this type is illustrated in Figs. 18–20, and includes a handle 31c integral with the outer tubular member 33c and formed between slits 84 extending lengthwise along the top section 45c and downwardly into the upper parts of end sections 43c, being preferably flared outwardly in said end sections. With this arrangement the handle may be formed integral with outer member 33c and said member and handle may be cut from a single sheet of said material in one operation. The handle 31c is raised for grasping purposes by pressing inwardly the end portions cut from the end sections 43c. To facilitate this operation, and to provide a certain amount of yieldable support for the handle in the region where it is bent inwardly, the lateral margins 81 of the top section 37c may be provided with inwardly directed slits 85 arranged in line with the ends of handle 31c and located between the upper ends of cans 80 so that the portions of margins 81 adjacent slits 85 may be deflected inwardly as indicated in Fig. 20 to permit the ends of handle 31c to move inwardly, the deflected portions providing support for said ends and protecting them against cutting on the can rims.

While the container parts may be manufactured from various types of material, and various parts may be made of different materials, the different embodiments have been particularly designed for construction from relatively stiff, flexible, foldable, fibrous sheet material of the paperboard or boxboard type, made entirely or principally from wood pulp or similar fibrous material. The thickness, strength, stiffness and other characteristics of such material employed for containers embodying the invention will be determined by the nature of the merchandise to be packaged and the treatment to which the package will be subjected, the weight of the merchandise and the sharpness of contacting portions thereof being important factors. Consequently containers for different uses may be made from a wide variety of such sheet material, including also cardboard, composite laminated sheets of paper such as kraft, as well as sheets which have been given special treatment including impregnation with waterproofing or stiffening material, surfacing with finer grades of fiber to increase the toughness, printing qualities and other characteristics, and other types of fibrous sheet material known to the trade.

The handle may be made from similar material, which must be sufficiently tough to prevent breaking, especially at the points of engagement with the container body or in the zone of contact with and compression by the hand of the user. When the handle is made of such sheet material the grain or general fiber direction should extend longitudinally along the handle where added tensile strength is desired, and the desirable smooth curvature may be added by transverse scoring; but the grain may run crosswise where the handle has sufficient tensile strength and a smooth longitudinal curve is desired in relatively stiff material with a minimum of scoring.

An important and unexpected feature of the invention is the facility with which the containers of the type illustrated in Figs. 1–17 may be packed and the contents removed without endangering the container or interfering with the firm retention of the merchandise. In packing a container of the type shown in Figs. 1 and 7 the body members 32 and 33 are readily deflected to permit lateral insertion of the corner bottles since the top sections of these members are unconnected, permitting the sections to be shifted laterally at the top to spread the corner apertures. The insertion of the final corner bottle is readily accomplished by inserting the base of the bottle in the corresponding corner aperture about midway between the top and bottom of the container, the top sections being capable of downward deflection adjacent said corner to spread the opening sufficiently wide to permit insertion of a bottle base. The bottle may then be slid downwardly almost into final position and until the neck portion is opposite the upper ends of the side sections, whereupon the neck may be pressed inwardly, the material being sufficiently flexible and resilient to permit the adjacent margins of the side sections and connecting portions 40 to yield sufficiently to permit the neck to pass into its packed position as set forth above. When the package is picked up by the handle the outer tubular member 33 is drawn inwardly against the end bottles which forces the corner bottles into snug engagement with the recesses encircling their necks, increasing the firmness with which the bottles are retained during carrying, when positiveness of retention is most important.

In the forms employed for packing more than four bottles (Figs. 3–5 and 6), the intermediate bottles may be packed by inserting their necks through the corner apertures of the container and upwardly through the apertures in the top sections, then sliding the bases of such bottles through the corner apertures into final position, after which the corner bottles may be inserted in the manner already indicated. This operation may be carried out very easily and rapidly by relatively unskilled operators. In the arrangement illustrated in Figs. 3–5 the bottles intermediate the ends of the package may be inserted by shifting the two parts of the top section 37a laterally in opposite directions parallel to slit 71. The intermediate bottles may then be inserted through the resulting apertures at opposite sides of the container between the divisions of side sections 35a on either side of slits 72. The portions of the inner member 32a are then returned to normal position with the aperture 70 embracing the necks of the center bottles, and the corner bottles may be inserted in the manner already indicated.

Containers of the type disclosed in Figs. 15–17 are readily packed by inserting the fruit or other articles through the corner openings. Where the container is packed with a plurality of vertical rows of fruit, as indicated in Fig. 16, the fruit may be inserted when the container is on its side, the lower rows being packed first and then one upper row, followed by the end articles of the remaining upper row which are inserted near the middle of the corner opening and shifted endwise into position. The central article of this row is inserted last, the material from which the container body is made being sufficiently flexible and resilient to permit the corner opening to be spread sufficiently to force said middle article into place, the yieldable bends connecting the top and bottom sections with the adjacent lateral sections

cooperating to permit the margins of said corner opening to yield for insertion of the last piece of fruit and then to return to normal position. This arrangement and method of packing obviously requires the use of sheet material suitably combining stiffness with a certain amount of flexibility and resilience; but standard materials of the paperboard type possess the requisite qualities.

Containers embodying the invention may also be packed by positioning the articles of merchandise in proper relative position within one tubular body member and thereafter applying the other body member, as by sliding the latter over the member packed with merchandise. This method of packing is applicable to the packaging of the usual flat-ended cans or other articles which do not have portions projecting through or beyond the container sections. In the form of container shown in Figs. 18–21 the container may be packed by inserting cans in the inner tubular member 32c (Fig. 19) and thereafter sliding the outer member 33c longitudinally along the lateral margins 81, 82 of the top and bottom sections of inner member 32c into the position shown in Fig. 18 as heretofore described.

Containers of this type may also be packed by a similar method in which the inner tubular member body 32c is partially inserted in the outer member 33c until a side section 35c is flush with the rear edge of the member 33c and the two members are placed on the packing table with said edge and side section resting on the table. In this position the cans may be inserted at each side of the container above the upper edge of the outer member 33c and dropped into place, said outer member being readily drawn up into final position by a simple movement of the fingers after the last cans have been placed in the upper corners of the package.

In the embodiments which employ a separable handle the latter may readily be attached either before or after packing by inserting its ends in the slots provided therefor. The handles may be collapsed between the projecting ends of the bottles or the like or against the container top for stacking the packages in tiers or packing them in cartons, show cases, shelves or other confined spaces, the handles being at all times readily available for withdrawal from collapsed position and use for lifting and carrying the package.

It has been found in practice that packages embodying the invention retain the merchandise with exceptional firmness and security, despite the relatively small amount of material employed and the extensive exposure of the articles. For instance, even in the embodiments employed for packing bottles, in which the corner bottles are exposed throughout their entire length, the packages may be subjected to considerable rough handling and tumbling about, without breaking the bottles by impact against each other or dislodging them from their proper positions in the container. Prior art packages of the display type have proved to be entirely unable to undergo such tests and in particular are subject to ready dislocation or escape of the bottles from the container when subjected to similar treatment.

While the preferred form of the invention has been indicated in various embodiments and certain variations have been illustrated and described, this disclosure is not intended to be restrictive since other variations may be made within the scope of the invention as set forth in the claims. For instance, while certain structures have been described as arranged on the inner and outer body members respectively, and have in most instances special advantages when arranged as set forth, the inner member may in many instances be employed as the outer member. Likewise, although the handle is shown as mounted on the outer member 33, and has certain advantages when thus arranged, this showing is not intended to limit the invention.

In describing the package, the container and the merchandise group reference has been made to the top, bottom, sides and ends of these features. While such terms have definite significance in connection with many of the specific arrangements as described, they are employed in the broader phases of the invention primarily for convenience and clearness of description.

What is claimed is:

1. A display and carrying package for consumer units of merchandise comprising a container formed of stiff flexible sheet material including two tubes overlapped at the top and bottom of the container, joined at the bottom and marginally spaced between the top and bottom to form corner openings; and merchandise confined in the container including columnar articles spanning the corner openings and extending beyond the top, said tubes being relatively movable at the top to vary the width of the corner openings for insertion of the initial articles, and the margins of at least one corner opening being yieldable and resilient for insertion and removal of the final article, said tubes being held in relatively fixed position by the merchandise when the container is fully packed.

2. A display and carrying package for consumer units of merchandise comprising a container of stiff flexible sheet material including a top, a bottom and lateral sections connecting the top and bottom and marginally spaced to form corner openings; and merchandise confined in the container including a plurality of columnar articles having tapered necks extending through and engaged by said top, arranged with an article spanning each corner opening, the lateral sections of the container being connected to the container top by convex portions provided with recesses fitting said necks and having margins continuous with the margins of subjacent flat portions of the lateral sections and forming therewith flexible projecting portions yieldable for lateral insertion and removal of articles.

3. A display and carrying package for consumer units of merchandise comprising a container formed of stiff flexible sheet material including two tubes overlapping at the top and bottom of the container and marginally spaced between the top and bottom to provide corner openings, and a plurality of articles confined in the container and having neck portions of reduced diameter extending beyond the container top with one of said articles exposed in and spanning each corner opening, said top including portions of said tubes extending transversely between the projecting necks of the articles and engaging said necks substantially at right-angles to the axes of the articles and in transverse bracing relationship thereto.

4. A display and carrying package for consumer units of merchandise comprising a container formed of stiff flexible sheet material including a top, a bottom and lateral sections connecting the top and bottom marginally spaced to provide corner openings; and merchandise confined in the container including a plurality of bottles supported by the container bottom and

maintained in firmly packed position by the lateral sections, the container top extending between the necks of the bottles in transverse engagement therewith and maintaining the upper portions of the bottle bodies spaced from each other.

5. A display and carrying container for consumer units of merchandise, comprising a body formed of stiff flexible sheet material having a top, a bottom and lateral sections connecting the top and bottom and marginally spaced to provide corner openings, each lateral section having a substantially flat central portion and being connected to the container top by a convex portion.

6. A display and carrying container for consumer units of merchandise comprising a container body formed of stiff flexible sheet material including a top, a bottom and lateral members connecting the top and bottom and marginally spaced between the top and bottom to provide corner openings, the top being provided with merchandise-receiving recesses communicating with the corner openings.

7. A container as set forth in claim 6 in which the margins of the recesses are deflected transversely from the margins of the corner openings to form resilient projections yieldable for the insertion through said openings of articles larger in diameter than the normal width of such openings.

8. A display and carrying container for consumer units of merchandise comprising two tubes of stiff flexible sheet material overlapped at the top and bottom of the container and marginally spaced between said top and bottom to provide corner openings, the upper portions of the tubes being provided with merchandise-receiving apertures, one of said tubes being circumferentially divided along a line extending across the top portion and downwardly along lateral portions of the tube, and intersecting at least one of said apertures.

9. A blank for display and carrying containers formed from stiff flexible fibrous sheet material and comprising a bottom section, a lateral section, a top section and a second lateral section arranged in sequence, the top section including portions narrower than the lateral sections and having article-engaging margins.

10. A display and carrying package for a consumer unit of merchandise comprising a container formed of relatively stiff flexible sheet material including a top, a bottom, and lateral members connecting the top and bottom, the edges of said lateral members adjacent the corners of the package being spaced apart substantially throughout their length to provide corner openings of substantial width; and columnar articles spanning said corner openings and removable therethrough but yieldably retained within the container by the flexible margins of said openings, said articles extending beyond the top of the package through recesses which extend into the top of the container in continuation of the corner openings, the marginal portions of the container at said recesses cooperating with the margins of said openings to confine the corner articles while exposing them throughout their entire length.

11. A container for consumer units for merchandise comprising two tubes of relatively stiff flexible sheet material overlapped at the top and bottom of the container and marginally spaced between the top and bottom to form corner openings, each portion of a tube located between the container top and bottom being provided with a convex resilient bent portion yieldable under internal pressure exerted by merchandise in the container to maintain said tube portion in firm engagement with said merchandise.

ERNEST M. BROGDEN.