(19) Europäisches Patentamt
European Patent Office
Office européen des brevets

(11) EP 0 783 238 A3

(12) EUROPEAN PATENT APPLICATION

(88) Date of publication A3:
01.07.1998 Bulletin 1998/27

(43) Date of publication A2:
09.07.1997 Bulletin 1997/28

(21) Application number: **96830629.0**

(22) Date of filing: **17.12.1996**

(51) Int. Cl.[6]: **H04R 7/18**, H04R 31/00

(84) Designated Contracting States:
AT BE CH DE DK ES FI FR GB GR IE IT LI LU MC NL PT SE
Designated Extension States:
AL LT LV RO SI

(30) Priority: **22.12.1995 IT MC950134**

(71) Applicants:
- **S.I.P.E. Società Italiana Prodotti Elettromeccanici - S.p.A.**
  60037 Monte San Vito (AN) (IT)
- **ME.AL.-S.r.l.**
  Santa Maria Rossa di Garbagnate Monzese (MI) (IT)

(72) Inventors:
- **Sancisi, Carlo**
  Chiaravalle (AN) (IT)
- **Tontini, Franco**
  Falconara Marittima (AN) (IT)
- **Dal Pra, Mirco**
  Peschiera Borromeo (MI) (IT)
- **Dal Pra, Giancarlo**
  Sanzenone All'Ambro (MI) (IT)
- **Mondo, Arnillo**
  Bareggio (MI) (IT)

(74) Representative: **Baldi, Claudio**
Piazza Ghislieri, 3
60035 Jesi (Ancona) (IT)

(54) Method for the production and application of annular suspension edges of lound speaker diaphragms

(57) This invention concerns a method for the production and application of annular suspension edges of loud speaker diaphragms according to which said annular edge is moulded directly on the edge of the diaphragm, which is pre-loaded in the edge mould.

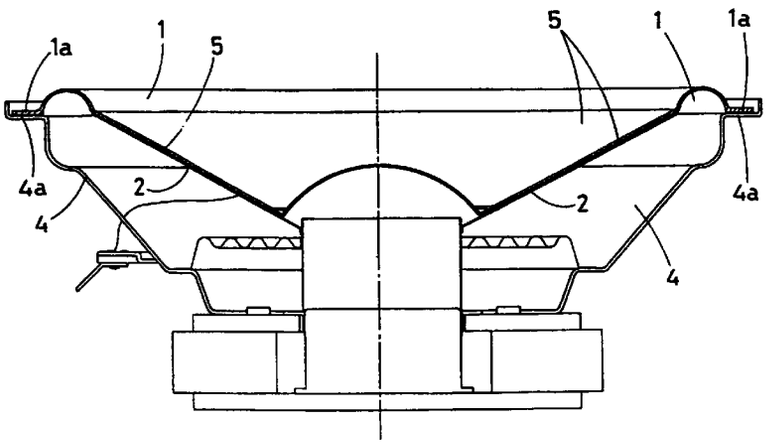

FIG. 2

EP 0 783 238 A3

European Patent Office

EUROPEAN SEARCH REPORT

Application Number
EP 96 83 0629

DOCUMENTS CONSIDERED TO BE RELEVANT

Category	Citation of document with indication, where appropriate, of relevant passages	Relevant to claim	CLASSIFICATION OF THE APPLICATION (Int.Cl.6)
X	EP 0 552 040 A (LEACH PATRICK ARTHUR ;LEACH DAVID IAN (GB)) * column 5, line 17 - column 8, line 7; figures 1-3,5,7 *	1,2,4,5	H04R7/18 H04R31/00
Y		3	
X	US 5 319 718 A (YOCUM FRED D) * column 5, line 12 - column 8, line 6 * * column 8, line 63 - column 9, line 30; figures 3-6 *	1,4	
Y		3	
X	GB 2 094 701 A (MATSUSHITA ELECTRIC IND CO LTD) * page 1, line 6 - line 50 * * page 2, line 58 - line 129; figures 3C,3D,3E,4 *	4,6	
Y		3	
A	EP 0 632 674 A (SONY CORP ;TANAKA KOGYO CORP LIMITED (JP)) * column 5, line 10 - column 7, line 18; figures 3A,4A,4B,4C *	1-6	TECHNICAL FIELDS SEARCHED (Int.Cl.6) H04R
A	PATENT ABSTRACTS OF JAPAN vol. 095, no. 009, 31 October 1995 & JP 07 162991 A (SONY CORP), 23 June 1995, * abstract *	1-6	

The present search report has been drawn up for all claims

Place of search	Date of completion of the search	Examiner
MUNICH	7 May 1998	Nieuwenhuis, P

CATEGORY OF CITED DOCUMENTS

X : particularly relevant if taken alone
Y : particularly relevant if combined with another document of the same category
A : technological background
O : non-written disclosure
P : intermediate document

T : theory or principle underlying the invention
E : earlier patent document, but published on, or after the filing date
D : document cited in the application
L : document cited for other reasons

& : member of the same patent family, corresponding document

EPO FORM 1503 03.82 (P04C01)