(No Model.)

W. N. RIDDLE.

EIGHT LENS TELESCOPE.

No. 451,134. Patented Apr. 28, 1891.

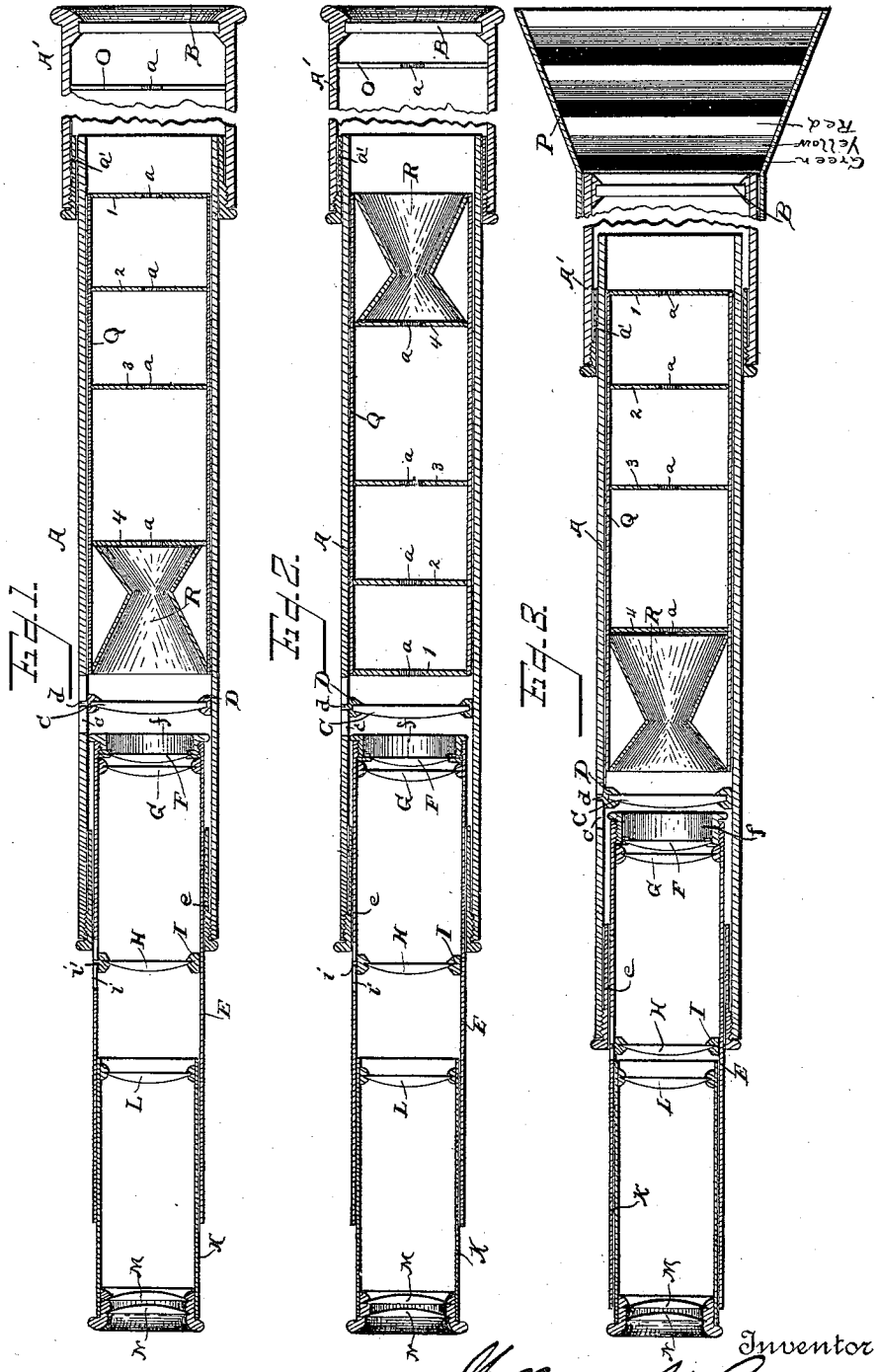

Witnesses
C. E. Hunt,
Alfred T. Gage.

Inventor
William N. Riddle
by W. C. Henderson,
his Attorney

THE NORRIS PETERS CO., PHOTO-LITHO., WASHINGTON, D. C.

UNITED STATES PATENT OFFICE.

WILLIAM NELSON RIDDLE, OF CROWLEY, TEXAS.

EIGHT-LENS TELESCOPE.

SPECIFICATION forming part of Letters Patent No. 451,134, dated April 28, 1891.

Application filed September 26, 1890. Serial No. 366,233. (No model.)

To all whom it may concern:

Be it known that I, WILLIAM NELSON RIDDLE, a citizen of the United States, residing at Crowley, in the county of Tarrant and State of Texas, have invented certain new and useful Improvements in Telescopes; and I do declare the following to be a full, clear, and exact description of the invention, such as will enable others skilled in the art to which it appertains to make and use the same, reference being had to the accompanying drawings, and to the letters and figures of reference marked thereon, which form a part of this specification.

My invention relates to certain improvements in refracting-telescopes, and the purpose thereof is to provide means whereby the instrument may be readily and accurately focused either by an adjustment of one or more of the lenses within the telescoping sections or by adjusting said sections in the usual manner.

It is also one purpose of my invention to combine with a refracting-telescope having one or more perforated diaphragms for avoiding errors due to spherical aberration an adjustable and removable transmitter for the light passing through the object-glass, having such construction that the quantity of light may be "toned" or adapted to the eyes of different observers.

It is my further purpose to provide a refracting-telescope with a flaring hood or gathering attachment for the light, having upon its reflecting-surface one or more bands or stripes of color arranged in suitable order of succession, each stripe corresponding with one of the rays of the solar spectrum, which refracts at the smallest angle, whereby an increased body of light is obtained and the difficulties due to the chromatic aberration avoided.

It is also my purpose to improve and simplify the construction of instruments of this class, to provide a refracting-telescope that may be suited to any eye, and to provide adjustable lenses to aid in focusing the instrument.

My invention consists to these ends in the several new combinations of parts and novel features of construction hereinafter fully described, and then more particularly pointed out and defined in the claims following this specification.

To enable those skilled in the art to make and use said invention, I will proceed to describe the same in detail, reference being had to the accompanying drawings, in which—

Figure 1 is a longitudinal section of a telescope embodying my invention. Fig. 2 is a similar view showing a different adjustment of the parts. Fig. 3 is a similar section showing a further adjustment and illustrating the construction of the hood.

In the said drawings, the reference-letter A designates the main section of the telescope-tube, having a suitable length and diameter. This portion of the instrument may itself be formed in separate sections, if preferred, which may be constructed to lengthen or shorten. Upon the end of this main section is an exterior sleeve *a'*, upon which is screwed a short section A', in the end of which is inserted a plane lens B, which forms the object-glass, and at a little distance from the other end of the section is inserted a lens C, which may be termed a "second object-glass," and which, as shown, is a plano-convex lens mounted in a collar D, which fits the interior of the section A, and is provided with a point or projection *d*, lying in a longitudinal groove or slot *c* in the telescope-tube, within the limits of which slot said lens may be adjusted toward or from the object-glass B to focus or aid in focusing the object viewed.

In the rear end of the main section A is inserted a second tubular section E, having a telescoping movement therein to enable the instrument to be closed and opened. This second section, which is of less diameter than the main section, moves in a sleeve or bushing *e*, which is screwed into the open end of the section A until arrested by a collar upon its outer end. This bushing extends some little distance within the end of the main section and closely fits the outer surface of the second section E without obstructing its free longitudinal movement. Into the forward end of said section E is secured a ring *f*, having an outwardly-turned collar or flange, which is of substantially the same diameter as the interior of the main section A, thereby affording an additional support to the telescoping section E. In the ring *f* is mounted

a lens F, and immediately in rear thereof is a second and similar lens G of somewhat greater diameter and having support upon the inner face of the second section. At some distance in rear of the lens G a lens H is arranged fitted within a collar I, which is capable of adjustment in the longitudinal line of the section E, its movement being limited by a slot *i* in the wall of the tube, in which lies a point or projection *i'*, rigid on the collar I. This lens H is of substantially the same diameter as the lens G. The lenses in the second section E are all shown as plano-convex.

Within the rearward end of the second section E a third section K is inserted, the parts being fitted to permit the withdrawal or extension of the section K when the glass is used. This section is provided with three lenses L, M, and N, the first being arranged in the forward end of said section and the two others M and N in an eye-piece fitted within the open end of the section K and placed close together, constituting a duplex lens. These three lenses are of the same size and form, all being plano-convex; but the two lenses M and N in the eye-piece are arranged differently, for while the lens L, like all the plano-convex glasses in the instrument, presents its plane surface to the entering beam of light, both the lenses in the eye-piece turn their convex faces toward the object-glass.

In order to avoid the errors due to spherical aberration, a diaphragm O, having a central aperture *a* of suitable diameter, may be placed in the short section A' in rear of the object-glass B. This diaphragm may be used in conjunction with a series of similar diaphragms 1, 2, and 3, arranged at suitable intervals within the forward portion of a tube Q, which is fitted within the main section A and adapted to be withdrawn therefrom by removing the short section A'. Each diaphragm is provided with a central aperture *a*, its center coinciding with the axis of the telescope and the center of the object-glass, the purpose being to cut off the diffused rays and avoid the dimness or ill-defined outlines of the image, due to spherical aberration.

At the rearward end of the tube Q is arranged a light-transmitter R, consisting of a hollow shell having the form of two conical frusta of equal bases, but unequal altitude, joined at their truncated ends, their bases being turned toward the opposite ends of the section A and being of such diameter that they fit closely within the tube Q, and may readily be removed therefrom for adjustment. The base of the frustum having the lesser altitude is provided with a diaphragm 4, having a central aperture *a*, while the other frustum is allowed to remain open at its base. By removing and reversing this transmitter the light may be toned, this result being due to the fact that in one position the centrally-perforated diaphragm 4 is brought in close proximity to the second object-lens C, while in the position shown in Fig. 1 of the drawings it is removed some little distance from said lens and brought nearer to the object-glass B. Moreover, this effect may be increased by reversing the tube Q and bringing the transmitter R next to the object-glass B, as shown in Fig. 2. The tube may also be adjusted longitudinally in the section A for a like purpose. The number of the perforated diaphragms in the said tube may be varied as circumstances require. One or more diaphragms O may also be used in the short tubular section A'.

Upon the end of the short tubular section A', I preferably mount a flaring or funnel-shaped hood P, constructed of any suitable material and having its interior surface painted with successive rings or stripes, their colors corresponding with the red, yellow, or orange and green rays of the solar spectrum, which refract at the smallest angles. I have found by experiment that the presence of these colors upon the inner face of the hood aids in avoiding chromatic aberration, which is most likely to occur when the hood is used, because of the reflection of the diffused light from the converging face of the hood, whereby it is caused to traverse the lens at an angle with the direct rays.

I employ a multiplicity of lenses in this telescope, for the reason that lenses of low power are more easily constructed, are more liable to be free from inequalities or imperfections in the glass, and are much more readily and accurately corrected for aberration. Moreover, in lenses of low power, and especially in plano-convex lenses, the difference of refraction is much less than in convex lenses or lenses of high power.

What I claim as my invention is—

1. In a telescope, the combination, with a main tubular section having one or more lenses, of an insertible and longitudinally-adjustable tube arranged behind the object-glass and provided with a series of centrally-perforated diaphragms, and a removable and reversible transmitter arranged in one end of said tube and having the form of two conical frusta of equal base and unequal altitude joined at their truncated ends, the base of the lower frustum being covered by a diaphragm having a central aperture, substantially as and for the purposes set forth.

2. In a telescope, the combination, with a main tubular section having an object-glass or lens, of a second lens mounted in a movable collar in said section and having a projection lying in a slot cut longitudinally in the wall of said section, a second section adjustable in an interior bushing or sleeve in the end of the main section, the second section having two lenses arranged in close proximity in the end and an adjustable lens between its ends, and a third section having a lens in its forward end and a duplex plano-convex lens in its eye-piece, substantially as and for the purposes set forth.

3. In a telescope, the combination, with a main tubular section having an object-glass in its end and a lens at a distance in the rear thereof, of an insertible, reversible, and adjustable tube arranged between said object-glass and lens, and provided with a series of diaphragms having central perforations and arranged at different intervals in the forward portion of said tube, and a removable and reversible transmitter arranged in the rearward end of the tube and composed of two parts resembling the frusta of cones of equal base and unequal altitude joined at their truncated ends, the base of one frustum being provided with a centrally-perforated diaphragm, substantially as and for the purposes set forth.

4. In a telescope, the combination, with a main tubular section, of a hood having a flaring or funnel shape and projecting in front of the forward end of the said section, on which it is mounted, the interior face of said hood being provided with concentric stripes of colors harmonizing with the colors of the less refrangible rays of the solar spectrum, substantially as and for the purposes set forth.

In testimony whereof I affix my signature in presence of two witnesses.

WILLIAM NELSON RIDDLE.

Witnesses:
ALFRED T. GAGE,
C. E. HUNT.