Nov. 18, 1924. 1,515,721

C. D. BONSALL

CAR ROOF

Filed Jan. 10, 1923

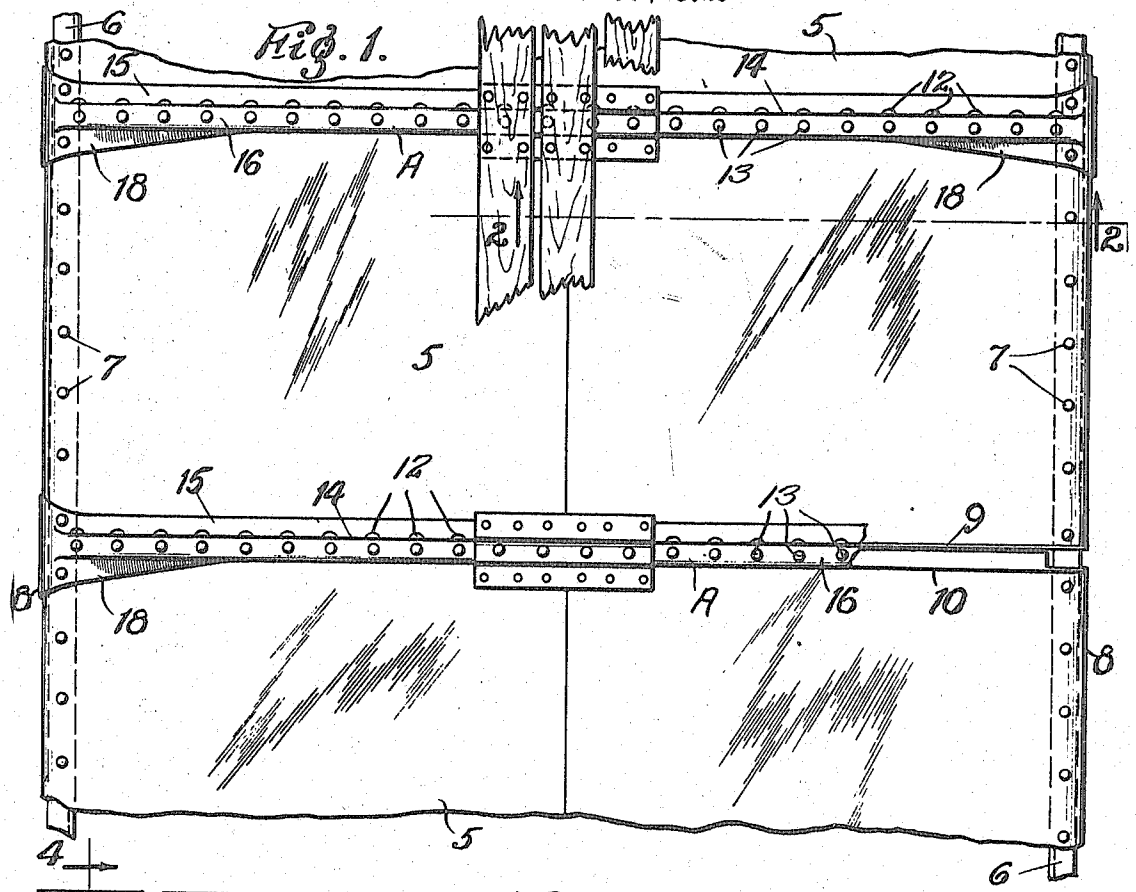

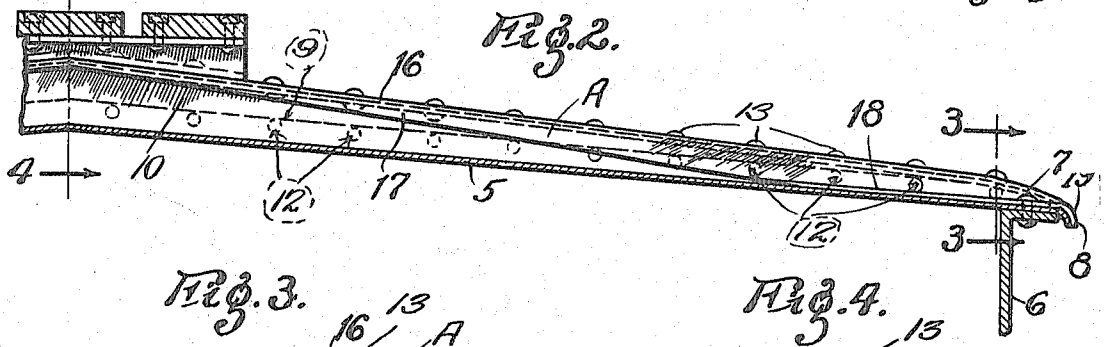

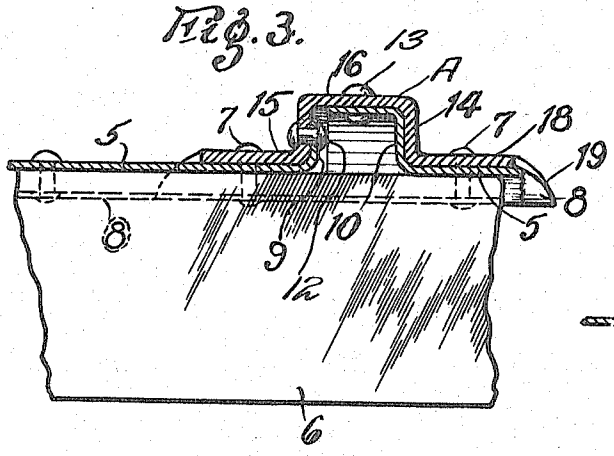

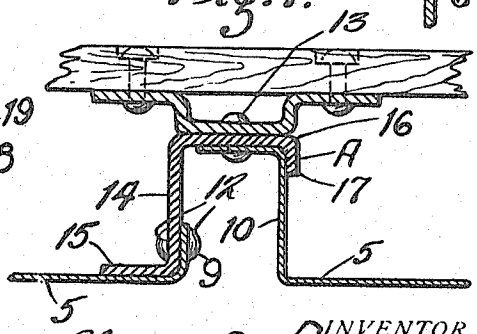

INVENTOR
Charles D. Bonsall,
BY
Carl Ruth,
His ATTORNEYS.

Patented Nov. 18, 1924. 1,515,721

UNITED STATES PATENT OFFICE.

CHARLES DAVID BONSALL, OF PITTSBURGH, PENNSYLVANIA, ASSIGNOR TO P. H. MURPHY COMPANY, OF NEW KENSINGTON, PENNSYLVANIA, A CORPORATION OF PENNSYLVANIA.

CAR ROOF.

Application filed January 10, 1923. Serial No. 611,756.

To all whom it may concern:

Be it known that I, CHARLES DAVID BONSALL, a citizen of the United States, and a resident of the city of Pittsburgh, in the county of Allegheny and State of Pennsylvania, have invented a certain new and useful Improvement in Car Roofs, of which the following is a specification.

This invention relates principally to car roofs of the all-steel riveted-up type wherein self supporting roof sheets span from side plate to side plate and are rigidly secured thereto and to carline members to form a rigid load-sustaining structure. The principal object of the present invention is to produce a roof that will be stiffer and stronger than previous roofs of the same weight of metal and at the same time facilitate the manufacture and effect greater economy of material. The invention consists principally in combining the carlines and roof sheet flanges to form weather-proofing seams or joints; and it also consists in the construction and arrangements of parts hereinafter described and claimed.

In the accompanying drawing wherein like symbols refer to like parts wherever they occur,

Fig. 1 is a plan view of part of a car roof embodying my invention;

Fig. 2 is an enlarged transverse section through one-half of the roof on the line 2—2 in Fig. 1;

Fig. 3 is a cross-section through one of the seams or joints at the ridge on the line 3—3 in Fig. 1; and

Fig. 4 is a similar cross-section through said seam adjacent to the eaves on the line 4—4 in Fig. 1.

The present roof comprises metal roof sheets 5 that span the car from side plate 6 to side plate 6 and are rigidly secured to said side plates by rivets 7. The roof sheets slope upwardly from eaves to ridge and are provided with downturned eaves flanges 8 that overhang the outer edges of the side plates. The roof sheets are spaced apart along their adjacent side margins; and between the adjacent marginal portions of successive roof sheets are disposed relatively thick flanged members A whose ends rest on and are rigidly secured to the respective side plates and function as carlines.

Each carline is preferably pressed from a piece of metal of uniform width and comprises a vertical web portion 14 having a lateral flange 15 on its lower edge disposed on one side of the web and a lateral flange 16 on its upper edge disposed on the opposite side of the web. The oppositely projecting top and bottom flanges 15 and 16 are of the same width and extend continuously from end to end of the carline. The web 14 of the carline gradually diminishes in depth from its middle toward its end thus affording surplus metal which is utilized in forming a depending flange 17 along the free marginal edge of the lateral top flange 16 of the carline. As the depth of the web portion 14 of the carline diminishes toward each end thereof, there is a corresponding increase in the depth of the depending flange 17 from the middle of the carline toward each end. At points where the depending flange 17 of the carline reaches the plane of the lateral base flange 15 thereof, the free marginal portion of said flange 15 is bent outwardly, forming at each end of the carline a lateral base flange 18 which increases in width toward the ends of the carline.

It is noted that the forming along the free marginal edge of the lateral top flange 16 of the depending flange 17 and the forming along the lower edge of the end portions of said depending flange 17 of the lateral base flanges 18, which lie in the plane of the bottom lateral flange 15 on the opposite side of the web 14, results in a carline which gradually changes from a substantially Z-shaped section at its middle into an inverted channel-shaped section adjacent to each end having lateral base flanges 15 and 18. As shown in the drawing, the ends of the carlines are preferably provided with downturned flanges 19 that overhang the outer edges of the side plates; and the inverted channel-shaped end portions of the carlines are preferably curved downwardly and merge into the plane of the base flanges 15 and 18 at points where they are turned down to form the depending end flanges 19.

One side margin of each roof sheet is preferably formed with a vertical upstanding seam flange 9; and the other side margin of said sheet is pressed up preferably in the form of a seam flange 10 of substantially inverted L-shaped section; that is, it comprises a nearly vertical web portion at the top of which is an outwardly extending lateral flange.

As shown in the drawing, the upstanding seam flange 9 at one side margin of a sheet is of substantially uniform depth from ridge to points adjacent to the eaves where its upper edge is curved downwardly in a manner corresponding to the downwardly curved end portions of the carlines and merges into the plane of said sheet at points where its ends are turned down to form the depending eaves flanges 8. The inverted L-shaped seam flange 9 at the other side margin of said sheet is of a depth corresponding substantially to the depth of the carlines; and likewise, said flange gradually decreases in depth on opposite sides of the ridge and has downwardly curved eaves end portions that correspond to the downwardly curved ends of the carlines and the upstanding seam flange 9. The lateral top flange portion of the inverted L-shaped seam flange 10 of each roof sheet is of less width than the width of the carlines; and it is preferable to terminate said lateral flange portion a distance from the eaves ends of said seam flange corresponding to the length of its downwardly curved eaves end portions.

The sheets are placed on the car with the upstanding seam flange 9 of one sheet arranged adjacent to the inverted L-shaped seam flange 10 of the next adjacent sheet. The carlines are then placed over the seam flanges 9 and 10 of adjacent sheets with their web portions 14 in contact with the inner face of the flange 9 and with their lateral top flanges 16 in contact with the lateral top flange of the seam flange 10. The seam flange 9 of one sheet is then secured to the web 14 of a carline by horizontal rivets 12, and the lateral top flange of the next adjacent sheet is preferably secured to the lateral top flange 16 of said carline by vertically disposed rivets 13, whereby the sheets and carlines are positively secured together to form a strong and rigid weather-proofing seam or joint construction. The eaves ends of the carlines are rigidly secured to the side plates 6 by the rivets 7 that secure the eaves ends of the roof sheets to said side plates.

A very important advantage of the roof construction hereinbefore described is that it permits the use of the carline as an element of a hollow weather-proofing seam construction. At the same time, the sheets and carlines are adapted for economical manufacture by reason of the mere flanging operation required in forming the carlines and roof sheets. It is noted as an important advantage of my invention that the carlines and roof sheet flanges cooperate to form a combined carline and seam construction whose cross-sectional shape at the ridge serves to take care of the vertical roof load and whose cross-sectional shape at the eaves serves to take care of the stresses that tend to rack and twist the car body and distort it endwise. This increased strength in the weather proofing seams or joints enables a roof to be produced with sheets and carlines of lighter gauge than would otherwise be practicable.

The invention is not limited to the precise shapes and arrangements of parts shown and described.

What I claim is:

1. A car roof comprising carline members of substantially Z-shaped section at the middle thereof changing to a channel section towards its ends and roof sheets having their adjacent marginal portions under and rigidly secured to said carline members and forming in connection therewith hollow weather-proofing seams, the marginal portion of one sheet being L-shaped and secured against the underside of the horizontal portion of the carline, and the marginal portion of the adjacent sheet having a turned-up portion that is secured to the vertical portion of said carline.

2. A car roof comprising carline members of substantially Z-shaped section at its middle portion and roof sheets having flanged marginal portions lying under and secured to said carline members to form in connection therewith hollow weather-proofing seams, one flanged portion being disposed vertically and secured by horizontal rivets and the other flanged portion having a horizontal part that is secured by vertical rivets.

3. A car roof comprising carline members of substantially Z-shaped section at its middle portion whose depth diminishes from ridge to eaves and roof sheets having flanged adjacent marginal portions that are below and rigidly secured to said carline members to form weather-proofing seams whose depth decreases from ridge to eaves.

4. A car roof comprising carline members of substantially Z-shaped section at its middle changing to channel section towards its ends and roof sheets having flanged marginal portions that are spaced apart underneath said carline members, said marginal portions being secured to said carline members to form in connection therewith hollow weather-proofing seams of substantially inverted channel-shaped section.

5. A car roof comprising carline members each of which has a middle portion of substantially Z-shaped section and end portions of substantially channel-shaped section, and roof sheets having seam flanges along their adjacent edges with vertical portions that are spaced apart and disposed under said carline members, said carline members being rigidly secured to the adjacent seam flanges of successive sheets to form in connection therewith hollow seams of substantially channel-shaped section.

6. A car roof comprising carline members each of which diminishes in depth from its

middle toward its ends and has a middle portion of substantially Z-shaped section and end portions of inverted channel-shaped section, and roof sheets having seam flanges along their adjacent side margins with vertical portions that are spaced apart and disposed under said carline members, said carline members being secured to the adjacent seam flanges of successive sheets to form in connection therewith seams of inverted channel-shaped section that diminish in depth from ridge to eaves.

7. A car roof comprising carline members each of which diminishes in depth from its middle toward its ends and has a middle portion of substantially Z-shaped section and end portions of inverted channel-shaped section, and roof sheets having upstanding seam flanges along their adjacent side margins, said flanges being spaced apart and disposed under said carline members, said carline members engaging the adjacent upstanding seam flanges of successive sheets and being rigidly secured thereto to form seams of substantially inverted channel-shaped section that decrease in depth from ridge to eaves.

8. A car roof comprising carline members each of which diminishes in depth from its middle toward its ends and has a middle portion of substantially Z-shaped section and end portions of inverted channel-shaped section, and roof sheets having upstanding seam flanges along their adjacent side margins, said carline members covering the adjacent upstanding seam flanges of successive sheets and being rigidly secured thereto to form seams of substantially inverted channel-shaped section that decrease in depth from ridge to eaves, the adjacent seam flanges of successive sheets being secured one to the vertical portion of a carline member and the other to the top of said carline member to form in connection therewith seams of substantially inverted channel-shaped section.

9. A car roof comprising carline members each of which diminishes in depth from its middle toward its ends and has a middle portion of substantially Z-shaped section and end portions of inverted channel-shaped section, and roof sheets having upstanding seam flanges along their adjacent side margins, said carline members engaging the adjacent upstanding seam flanges of successive sheets and being rigidly secured thereto to form seams in connection therewith of substantially inverted channel-shaped section that decrease in depth from ridge to eaves, the adjacent seam flanges of successive sheets comprising an upstanding flange portion secured to the vertical portion of a carline member on the inner face thereof and an upwardly and outwardly flanged portion secured to the upper horizontal portion of said carline member on the lower face thereof.

10. A car roof comprising carline members each of which has a middle portion of substantially Z-shaped section and end portions of substantially inverted channel-shaped section that are provided with lateral base flanges, and roof sheets below said carlines and having their adjacent marginal portions flanged upwardly and secured to said carline members to form in connection therewith hollow seams of substantially inverted channel-shaped section, the flanges of adjacent sheets comprising vertical portions that are spaced apart.

Signed at New Kensington, Pa., this 4th day of January, 1923.

CHARLES DAVID BONSALL.