Feb. 14, 1956 H. O. LEUSCHNER 2,734,990

DESK MOUNTED COMBINATION FAN AND HEATER

Filed Aug. 28, 1953 3 Sheets-Sheet 1

Fig. 1

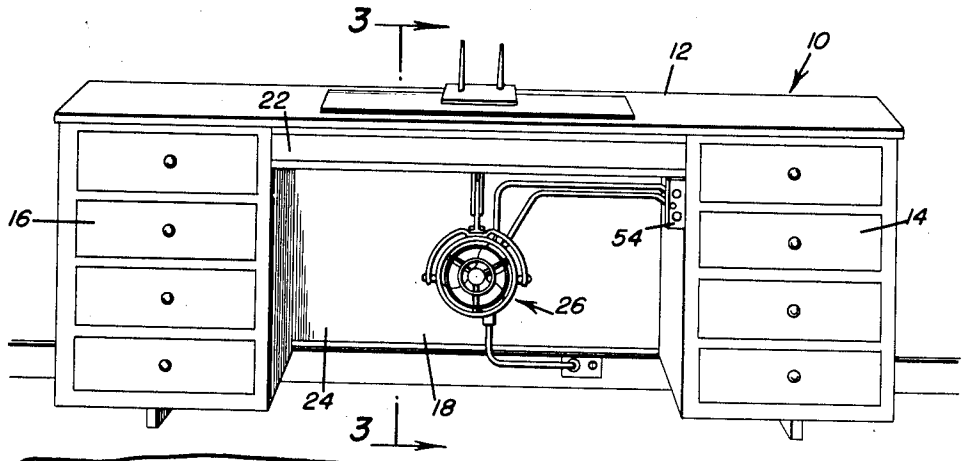

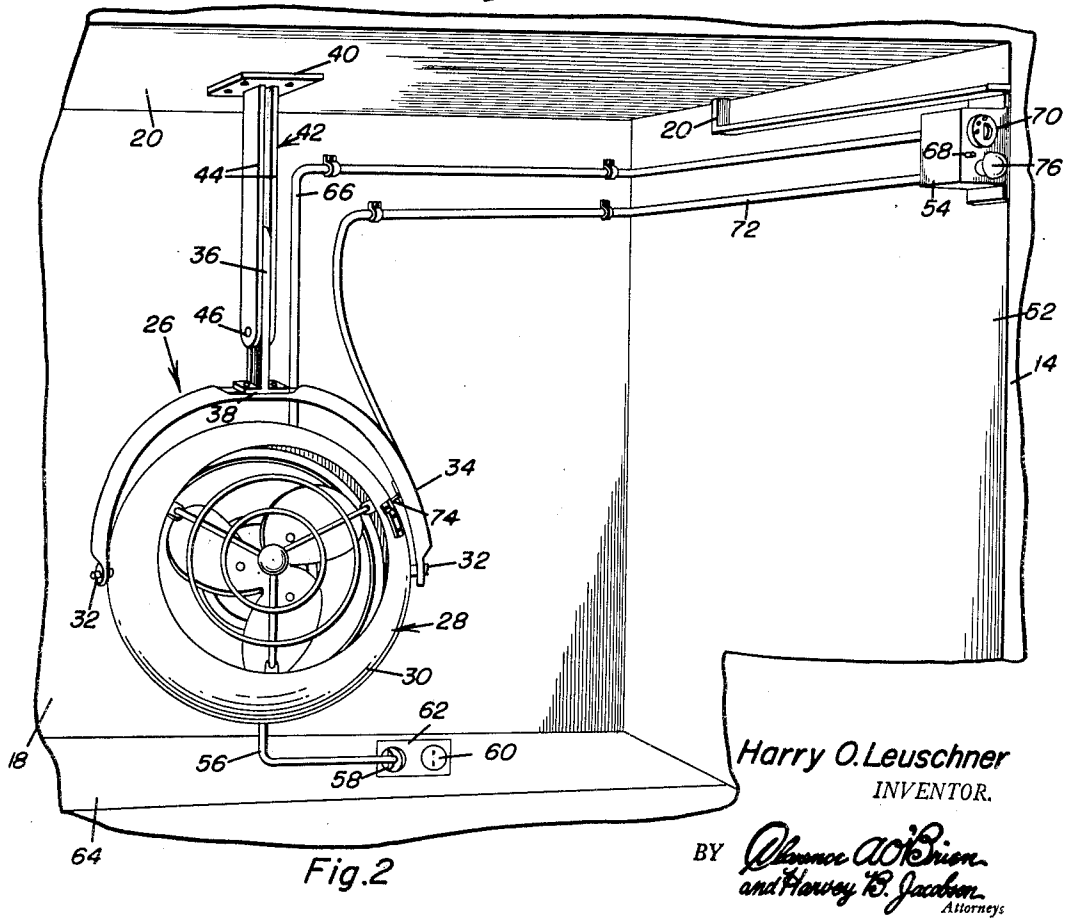

Fig. 2

Harry O. Leuschner
INVENTOR.

BY Clarence A. O'Brien and Harvey B. Jacobson
Attorneys

Feb. 14, 1956 H. O. LEUSCHNER 2,734,990

DESK MOUNTED COMBINATION FAN AND HEATER

Filed Aug. 28, 1953 3 Sheets-Sheet 2

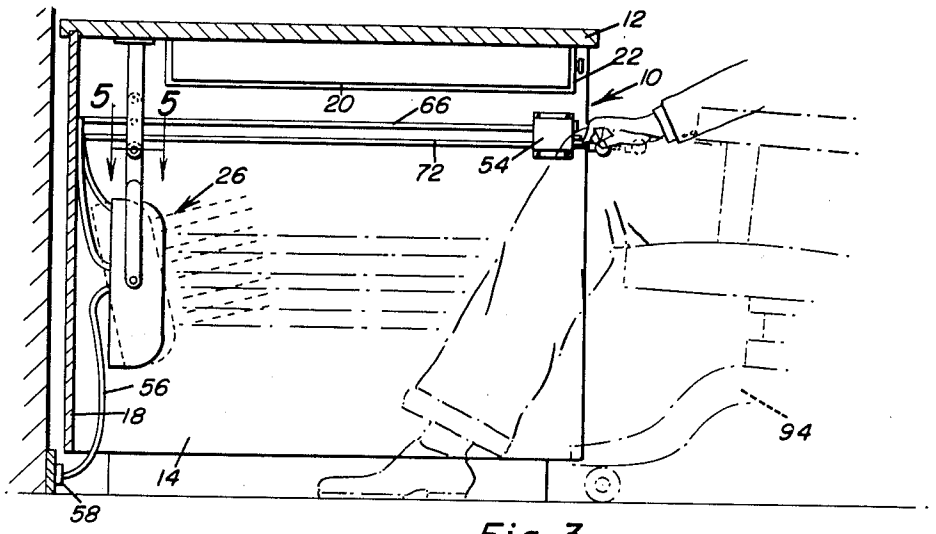

Fig. 3

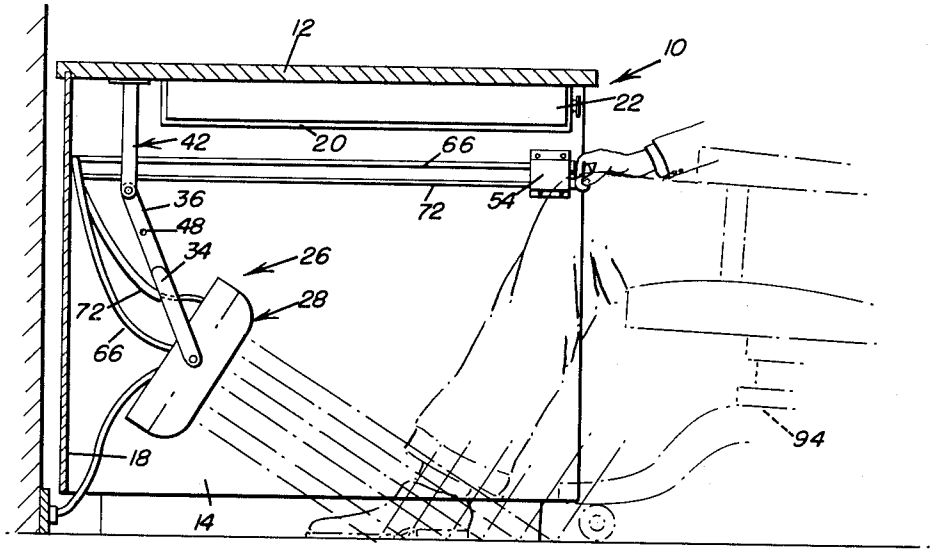

Fig. 4

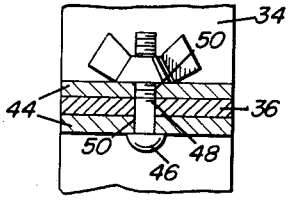

Fig. 5

Harry O. Leuschner
INVENTOR.

BY Clarence A. O'Brien and Harvey B. Jacobson
Attorneys

Feb. 14, 1956 H. O. LEUSCHNER 2,734,990

DESK MOUNTED COMBINATION FAN AND HEATER

Filed Aug. 28, 1953 3 Sheets-Sheet 3

Fig. 6

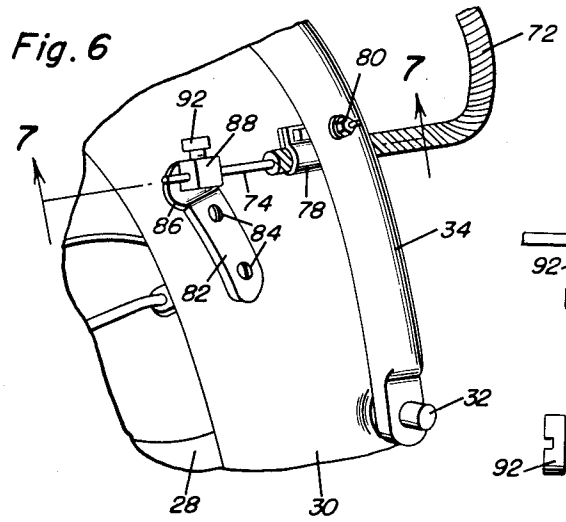

Fig. 7

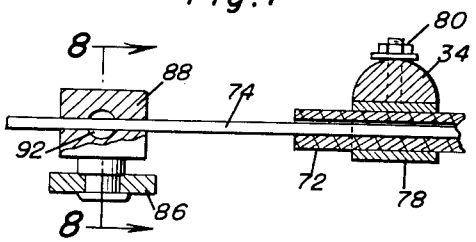

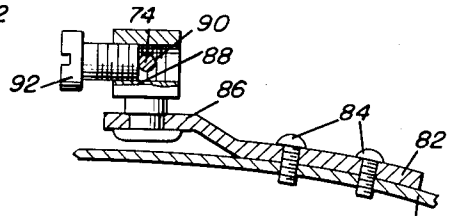

Fig. 8

Fig. 9

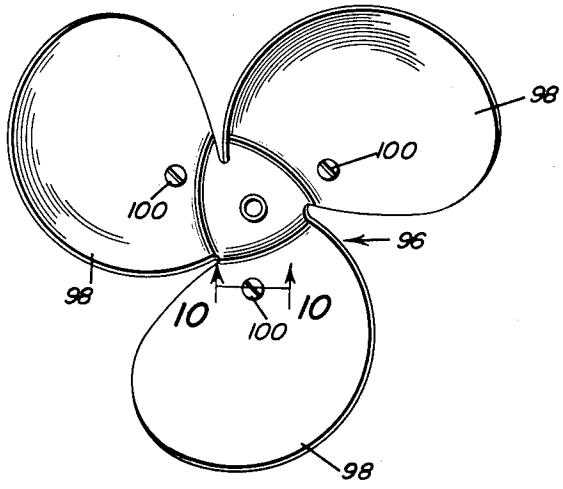

Fig. 10

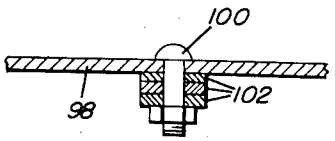

Harry O. Leuschner
INVENTOR.

BY Thomas A. O'Brien and Harvey B. Jacobson
Attorneys

United States Patent Office 2,734,990 Patented Feb. 14, 1956

2,734,990

DESK MOUNTED COMBINATION FAN AND HEATER

Harry O. Leuschner, Sarasota, Fla.

Application August 28, 1953, Serial No. 377,115

13 Claims. (Cl. 219—39)

This invention relates in general to improvements in fans, and more specifically to an improved combination fan and heater mounted beneath a desk.

The primary object of this invention is to provide an improved ventilation means which may be conveniently mounted beneath a desk in the leg space thereof whereby warm air or room temperature air may be thrown toward the occupant of such a desk so as to make the occupant comfortable.

Another object of this invention is to provide an improved mounting means for a fan whereby the fan may be conveniently mounted beneath a desk, the fan including remote control means whereby the same may be conveniently controlled by an occupant of such desk.

Another object of this invention is to provide an improved fan mounting means for the convenient mounting of a fan beneath a desk in a leg space thereof, the fan mounting means including means for adjustably positioning a fan both vertically and angularly so that the air directed thereby may be controlled.

A further object of this invention is to provide an improved counter-balancing means for a fan blade whereby the same may be conveniently balanced to reduce vibration.

These together with other objects and advantages which will become subsequently apparent reside in the details of construction and operation as more fully hereinafter described and claimed, reference being had to the accompanying drawings forming a part hereof, wherein like numerals refer to like parts throughout, and in which:

Figure 1 is a front elevational view of a desk having mounted in the leg space thereof a combined heater and fan;

Figure 2 is an enlarged fragmentary perspective view of the desk of Figure 1 and shows the general relationship of the fan with respect to the desk;

Figure 3 is an enlarged sectional view taken substantially upon the plane indicated by the section line 3—3 of Figure 1 and shows the fan mounted beneath the desk for directing air blasts horizontally, the fan being shown in dotted lines in a position for directing air blasts outwardly, an occupant of the desk being partly shown in broken lines;

Figure 4 is a sectional view similar to Figure 3 and shows the fan in a lowered position and tilted downwardly for directing air against the feet of the occupant of the desk;

Figure 5 is an enlarged fragmentary sectional view taken substantially upon the plane indicated by the section line 5—5 of Figure 3 and shows the manner in which mounting brackets for the fan are adjustably connected together;

Figure 6 is an enlarged fragmentary perspective view showing the manner in which the combination fan and heater is pivotally mounted in a mounting bracket, also being shown are means for adjustably positioning the combined fan and heater with respect to the mounting bracket.

Figure 7 is a fragmentary enlarged sectional view taken substantially upon the plane indicated by the section line 7—7 of Figure 6 and shows the manner in which a control cable is adjustably connected to the combined fan and heater;

Figure 8 is a fragmentary sectional view taken substantially upon the plane indicated by the section line 8—8 of Figure 7 and shows the manner in which a connector for the control cable is pivotally carried by a bracket mounted on the combined fan and heater;

Figure 9 is an elevational view of a fan intended for use with the combined fan and heater; and

Figure 10 is an enlarged fragmentary sectional view taken substantially upon the plane indicated by the section line 10—10 of Figure 9 and shows the general arrangement of an adjustable weight for counter-balancing the fan.

Referring now to the drawings in detail, it will be seen that there is illustrated in Figure 1 a conventional desk which is referred to in general by the reference numeral 10. The desk 10 includes a top wall 12 which is suitably supported by spaced ends 14 and 16. The ends 14 and 16 are in the form of drawer housings, but in cases of relatively small desks may be panels. The desk 10 also includes a back wall 18 and a trackway 20, the trackway 20 forming a support for a desk drawer 22. The space bounded by the sides 16 and 14, the back wall 18 and the top wall 12 forming a leg space which is referred to in general by the reference numeral 24.

Suitably suspended within the leg space 24 from the top wall 12 is a combined fan and heater assembly which is referred to in general by the reference numeral 26. The combined fan and heater assembly 26 includes a combined fan and heater unit 28 which is of a conventional type. The combined fan and heater unit 28 includes a housing 30 which has projecting outwardly therefrom in diametrical relation pivot pins 32. The pivot pins 32 are pivotally mounted in lower ends of an inward bifurcated bracket 34.

The mounting bracket 34 has secured to an upper intermediate portion thereof an upstanding leg 36, the leg 36 forming a part of the mounting bracket 34 and being connected thereto to a horizontal plane 38 which is formed integrally with the upstanding leg 36.

Secured to the top wall 12 on the underside thereof is a plate 40 which forms an upper part of an inverted bifurcated mounting bracket which is referred to in general by the reference numeral 42. The mounting bracket 42 includes a pair of spaced depending legs 44 which are disposed in parallel relation. The legs 44 have disposed therebetween and pivotally connected thereto by a removable pivot fastener 46 the leg 36. The leg 36, as is best illustrated in Figure 4, is provided with a plurality of apertures 48 through which the pivot fastener 46 is selectively positioned. It will be understood that the pivot fastener 46 also passes through aligned apertures 50 in the legs 44.

The supporting side 14 includes an inner surface 52 which has mounted thereon adjacent the inner section of the inner surface 52 with the underside of the bottom wall 20 a control panel 54. The control panel 54 is disposed adjacent the front open end of the leg space 24.

The combined fan and heater unit 28 is provided with a lead-in wire 56 which has disposed at one end thereof a plug 58 which is selectively engageable with an outlet socket 60 of an electrical wall outlet 62. The wall outlet 62 is carried by a portion of a wall 64 to which the desk 10 is adjacent. The lead-in wire 56 is connected to the combined fan and heater unit 28 and also to a wire 66. The wire 66 is connected to both a switch 68 and a combined switch and rheostat 70 carried by the control panel 54. The switch 68 controls the operation of the fan portion of the combined fan and heater unit 28 and

the combined switch and rheostat **70** controls the heater portion of that unit.

Suitably carried by the back wall **18** and the surface **52** is a tubular housing **72**. Carried by the tubular housing **72** for sliding movement therethrough is a flexible cable **74**. The flexible cable **74** has secured to one end thereof a control knob **76** which is disposed at the front of the control panel **54**. One end of the housing **72** is also positioned relative to the control panel **54** by conventional clamp means (not shown).

Referring now to Figures 6, 7 and 8 in particular, it will be seen that the housing **72** is secured with respect to one leg of the mounting bracket **34** by a clamp **78**, the clamp being secured to the mounting bracket **34** by a fastener **80**.

Carried by the housing **30** of the combined fan and heater unit **28** is a bracket **82** which is secured to the housing **30** by fasteners **84**. The bracket **82** includes an offset end portion **86** which has pivotally carried thereby a connector **88**. The connector **88** has a bore **90** thereto through which passes the associated end of the flexible cable **74**. The flexible cable **74** is adjustably positioned in the bore **90** by a locking screw **92**.

In view of the foregoing, it will be seen that the combined fan and heater unit **28** may be selectively adjustably positioned by selectively positioning the pivot fastener **46** in one of the apertures **48** in the upstanding leg **36**. Also, the mounting bracket **34** may be annularly adjustably positioned by pivoting the same to the desired position about the pivot fastener **46** and clamping the leg **36** in an adjusted position between the legs **44**.

After the mounting bracket **34** has been adjustably positioned, the combined fan and heating unit **28** may be selectively pivoted to various positions, as is best illustrated in Figures 3 and 4. The pivoting of the combined fan and heater unit **28** with respect to the mounting bracket **34** is accomplished by utilizing the control knob **76**, the control knob **76** moving the flexible cable **74** to adjusted positions so as to adjust the housing **30** with respect to the mounting bracket **34**.

It will be understood that the operation of the combined fan and heater unit **28** may be remotely controlled through the use of the switch **68** in the combined switch and rheostat **70**. Thus, it will be seen that the combined fan and heater unit may be both selectively positioned and selectively controlled by an occupant of the desk **10** while seated in a chair, such as the chair **94** conveniently positioned with respect to the desk **10**.

In order that the fan **96** of the combined fan and heater unit **28** may be balanced, it is provided with counter-balance means best illustrated in Figures 9 and 10. The fan **96** includes a plurality of individual blades **98** which may be of different weights and therefore cause an unbalanced condition of the fan **96**. In order to adjust the weights of the blades **98** to provide a balanced fan **96**, each of the blades **98** is provided with a removable fastener **100**. The fastener **100** is in the form of a nut and bolt and the bolt portion thereof has removably secured thereto weights **102** which are in the form of washers.

When it is desired to balance the individual blades **98** of the fan **96**, the fasteners **100** are selectively provided with weights **102**. By either adding or removing certain of the weights **102**, the blades **98** may be balanced. The balancing of the blades **98** causes a minimum of vibration of the fan **96**.

From the foregoing, the construction and operation of the device will be readily understood and further explanation is believed to be unnecessary. However, since numerous modifications and changes will readily occur to those skilled in the art, it is not desired to limit the invention to the exact construction shown and described, and accordingly all suitable modifications and equivalents may be resorted to, falling within the scope of the appended claims.

What is claimed as new is as follows:

1. The combination of a desk and ventilation means, said desk comprising a top and supporting side, said sides being spaced to form a leg space beneath said top, said ventilation means including a fan, mounting means supporting said fan in said leg space, adjusting means connected to said fan for remotely adjustably positioning said fan.

2. The combination of a desk ventilation means, said desk comprising a top and supporting side, said sides being spaced to form a leg space beneath said top, said ventilation means including a fan, mounting means supporting said fan in said leg space, adjusting means connected to said fan for remotely adjustably positioning said fan, control means for remotely controlling operation of said fan carried by said desk.

3. The combination of a desk ventilation means, said desk comprising a top and supporting side, said sides being spaced to form a leg space beneath said top, said ventilation means including a fan, mounting means supporting said fan in said leg space, adjusting means connected to said fan for remotely adjustably positioning said fan, control means for remotely controlling operation of said fan carried by said desk, said leg space having an open end, a control panel mounted at said open end, said adjusting means and said control means being connected to said control panel.

4. The combination of a desk and ventilation means, said desk comprising a top and supporting side, said sides being spaced to form a leg space beneath said top, said ventilation means including a fan, mounting means supporting said fan in said leg space, adjusting means connected to said fan for remotely adjustably positioning said fan, said mounting means including a first bifurcated bracket, a second bifurcated bracket, said second bifurcated bracket being pivotally connected to said first bifurcated bracket, said fan being pivotally carried by said second bifurcated bracket.

5. The combination of a desk and ventilation means, said desk comprising a top and supporting side, said sides being spaced to form a leg space beneath said top, said ventilation means including a fan, mounting means supporting said fan in said leg space, adjusting means connected to said fan for remotely adjustably positioning said fan, said mounting means including a first bifurcated bracket, a second bifurcated bracket, said second bifurcated bracket being pivotally connected to said first bifurcated bracket, said fan being pivotally carried by said second bifurcated bracket, said adjusting means including a housing having one end connected to said second bifurcated bracket, a cable carried by said housing having one end connected to said fan.

6. The combination of a desk and ventilation means, said desk comprising a top and supporting side, said sides being spaced to form a leg space beneath said top, said ventilation means including a fan, mounting means supporting said fan in said leg space, adjusting means connected to said fan for remotely adjustably positioning said fan, said mounting means including a first bifurcated bracket, a second bifurcated bracket, said second bifurcated bracket being pivotally connected to said first bifurcated bracket, said fan being pivotally carried by said second bifurcated bracket, said adjusting means including a housing having one end connected to said second bifurcated bracket, a cable carried by said housing having one end connected to said fan, said cable being adjustably connected to said fan.

7. The combination of a desk and ventilation means, said desk comprising a top and supporting side, said sides being spaced to form a leg space beneath said top, said ventilation means including a fan, mounting means supporting said fan in said leg space, adjusting means connected to said fan for remotely adjustably positioning said fan, said mounting means including a first bifurcated bracket, a second bifurcated bracket, said second

bifurcated bracket being pivotally connected to said first bifurcated bracket, said fan being pivotally carried by said second bifurcated bracket, said first bifurcated bracket being suspended from said top.

8. The combination of a desk and ventilation means, said desk comprising a top and supporting side, said sides being spaced to form a leg space beneath said top, said ventilation means including a fan, mounting means supporting said fan in said leg space, adjusting means connected to said fan for remotely adjustably positioning said fan, said mounting means including a first bifurcated bracket, a second bifurcated bracket, said second bifurcated bracket being pivotally connected to said first bifurcated bracket, said fan being pivotally carried by said second bifurcated bracket, said second bifurcated bracket including an upstanding leg, said leg being vertically adjustably connected to said first bifurcated bracket.

9. The combination of a desk ventilation means, said desk comprising a top and supporting side, said sides being spaced to form a leg space beneath said top, said ventilation means including a fan, mounting means supporting said fan in said leg space, adjusting means connected to said fan for remotely adjustably positioning said fan, control means for remotely controlling operation of said fan carried by said desk, said leg space having an open end, a control panel mounted at said open end, said adjusting means and said control means being connected to said control panel, a heater carried by said fan, control means for said heater carried by said control panel.

10. For use in combination with a desk, a ventilating attachment comprising a fan, mounting means for securing said fan in suspended relation within the general confines of a desk, said mounting means including a yoke, said fan being pivotally mounted within said yoke, a control panel intended to be mounted on a desk remote from said fan, mechanical linkage extending between said control panel and said fan for remotely controlling the adjustment of said fan within said yoke.

11. For use in combination with a desk, a ventilating attachment comprising a fan, mounting means for securing said fan in suspended relation within the general confines of a desk, said mounting means including a

yoke, said fan being pivotally mounted within said yoke, a control panel intended to be mounted on a desk remote from said fan, mechanical linkage extending between said control panel and said fan for remotely controlling the adjustment of said fan within said yoke, said mechanical linkage including a housing rigidly connected to said control panel and said yoke, and a control wire slidably carried by said housing and terminally connected to said fan.

12. For use in combination with a desk, a ventilating attachment comprising a fan, mounting means for securing said fan in suspended relation within the general confines of a desk, said mounting means including a yoke, and a mounting bracket, said yoke being selectively connected to said mounting bracket for elongation and angular adjustment, said fan being pivotally mounted within said yoke, a control panel intended to be mounted on a desk remote from said fan, mechanical linkage extending between said control panel and said fan for remotely controlling the adjustment of said fan within said yoke.

13. For use in combination with a desk, a ventilating attachment comprising a fan, mounting means for securing said fan in suspended relation within the general confines of a desk, said mounting means including a yoke, said fan being pivotally mounted within said yoke, a control panel intended to be mounted on a desk remote from said fan, mechanical linkage extending between said control panel and said fan for remotely controlling the adjustment of said fan within said yoke, a heater carried by said fan, control means for said heater carried by said control panel and connected to said heater.

References Cited in the file of this patent

UNITED STATES PATENTS

1,627,229	Brown	May 3, 1927
2,078,548	Strawser	Apr. 27, 1937
2,140,017	Koch	Dec. 13, 1938
2,341,125	Spear	Feb. 8, 1944
2,434,130	Turner	Jan. 6, 1948
2,572,120	Dixon	Oct. 23, 1951
2,587,240	Spreng	Feb. 26, 1952
2,616,617	Hill	Nov. 4, 1952