Sept. 2, 1952 E. T. ROBERTS 2,609,483

LAMP CASE FOR ELONGATED TUBULAR LAMPS

Filed Nov. 24, 1948 2 SHEETS—SHEET 1

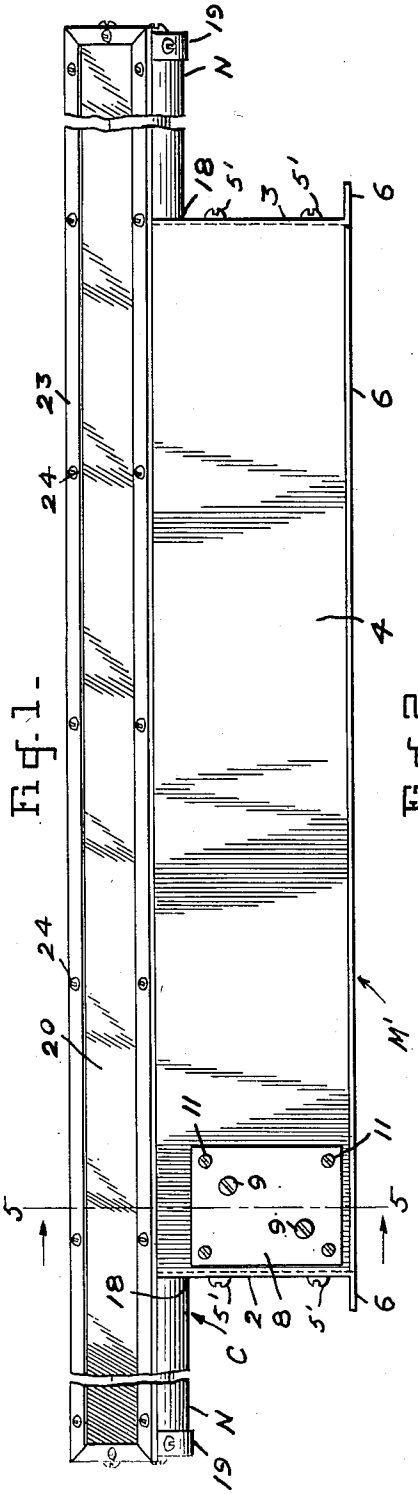

Fig. 1.

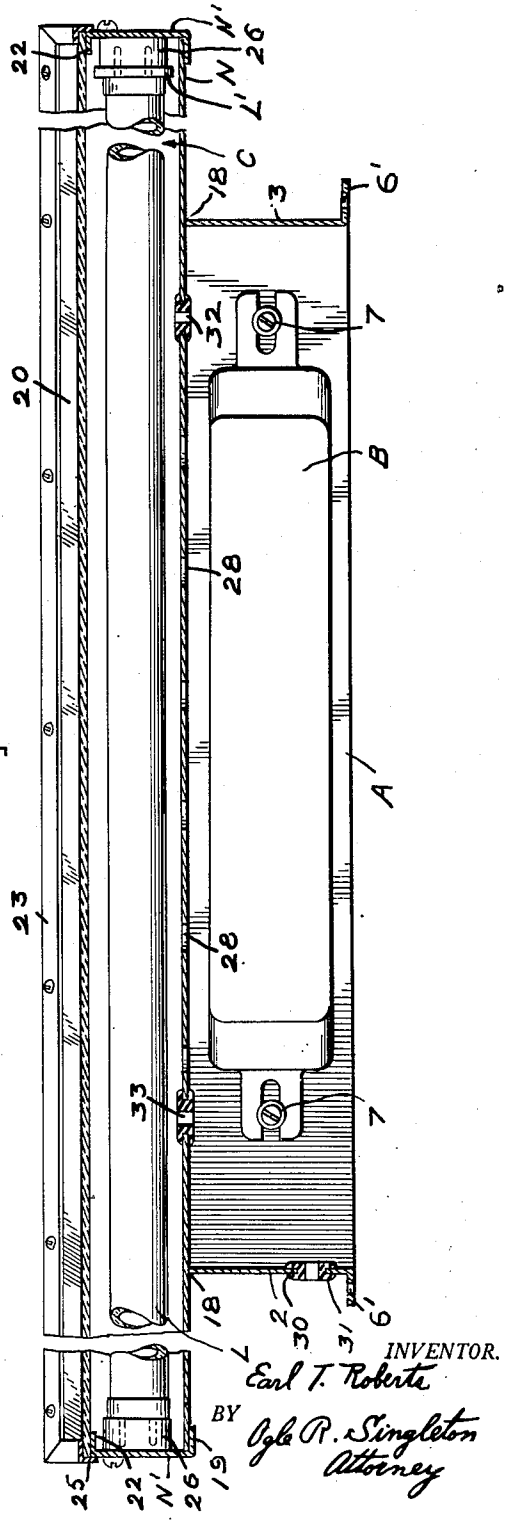

Fig. 2.

INVENTOR.
Earl T. Roberts
BY
Ogle R. Singleton
Attorney

Sept. 2, 1952 E. T. ROBERTS 2,609,483

LAMP CASE FOR ELONGATED TUBULAR LAMPS

Filed Nov. 24, 1948 2 SHEETS—SHEET 2

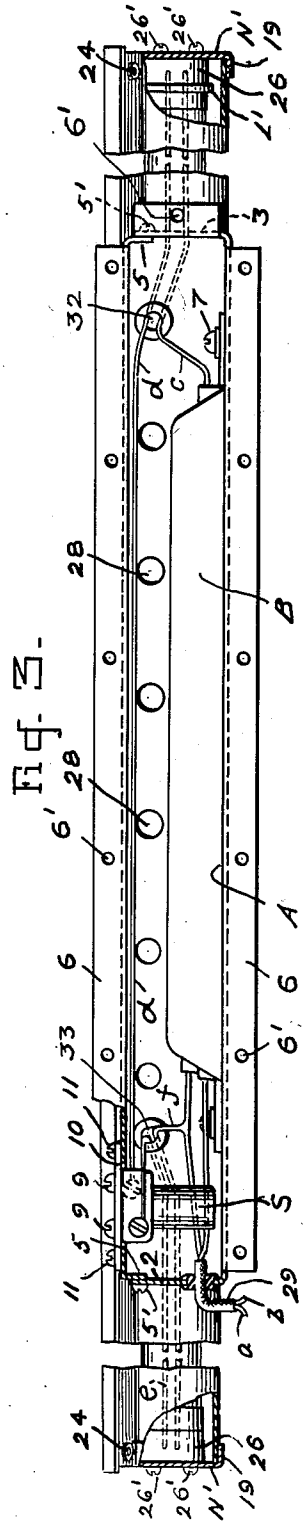

Fig. 3.

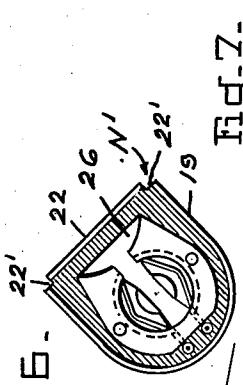

Fig. 6.

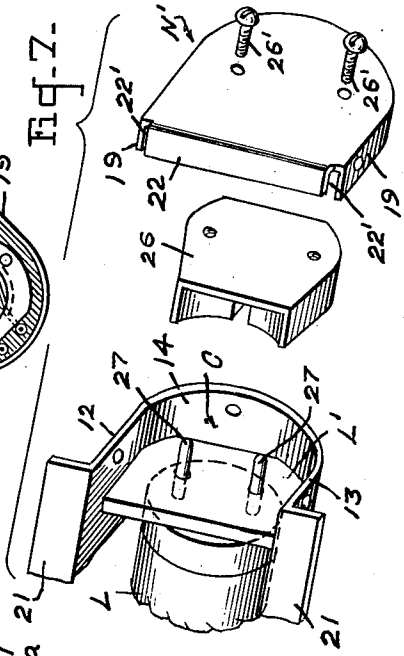

Fig. 7.

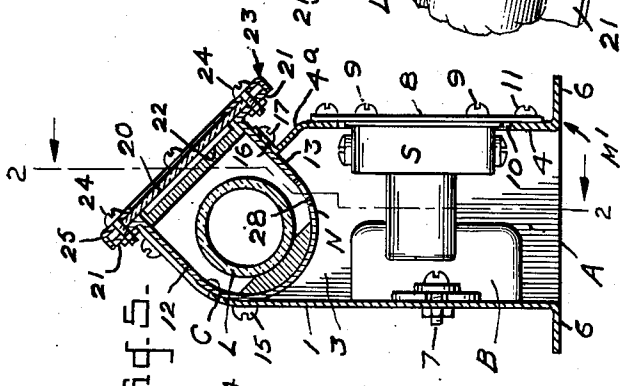

Fig. 5.

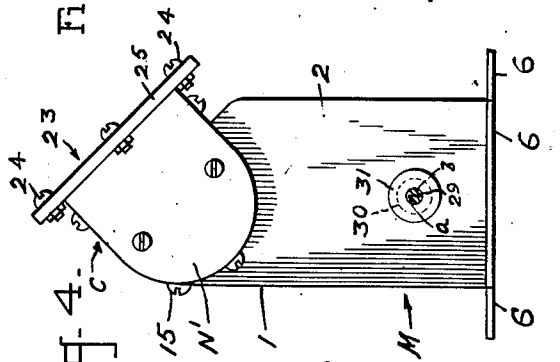

Fig. 4.

Earl T. Roberts INVENTOR.

BY Ogle R. Singleton
Attorney

Patented Sept. 2, 1952

2,609,483

UNITED STATES PATENT OFFICE

2,609,483

LAMP CASE FOR ELONGATED TUBULAR LAMPS

Earl T. Roberts, Baltimore, Md., assignor to The Fluorescent Electric Manufacturing Company, a corporation of Maryland

Application November 24, 1948, Serial No. 61,769

2 Claims. (Cl. 240—1)

1

My invention consists in a new and useful improvement in lamp cases and is intended particularly to provide a case for a fluorescent lamp and its auxiliaries. The novel and useful features of my improved case are the combined chambers for the lamp and the auxiliaries, respectively, the adequate sealing of joints to prevent heat escape, and the means of access to the chambers to facilitate replacement of parts.

While I have illustrated in the drawings and have hereinafter fully described one specific embodiment of my invention, it is to be distinctly understood that I do not consider my invention to be limited to said specific embodiment, but refer for its scope to the claims appended hereto.

Fig. 1 is a front elevation of my improved case.

Fig. 2 is a longitudinal, vertical section on the line 2—2 of Fig. 5, in the direction of the arrows.

Fig. 3 is a bottom plan, portions being broken away.

Fig. 4 is an enlarged end elevation.

Fig. 5 is an enlarged, transverse, vertical section on the line 5—5 of Fig. 1, in the direction of the arrows.

Fig. 6 is an enlarged elevation of one of the sockets for the lamp.

Fig. 7 is an exploded perspective of parts shown in Fig. 6.

As illustrated in the drawings, my improved case comprises a lower chamber A for the auxiliaries, viz the ballast B and the starter switch S, and the upper chamber C for the lamp L. The lower chamber A is formed by two members M and M' of sheet metal or other suitable material. The member M is fabricated to form the rear wall 1 and the end walls 2 and 3 of the chamber A, and the member M' is fabricated to form the front wall 4 of the chamber A. The member M' has inturned flanges 5 on the ends of wall 4 which are attached by bolts 5' to the walls 2 and 3, respectively (Fig. 3), the joints being packed with a suitable packing to form an air-tight joint. The members M and M' are provided with flanges 6 projecting from the lower edges of the walls 1 to 4 and having suitable bolt holes 6' for mounting the casing upon a suitable supporting medium (not shown) the joint being suitably packed to render it air-tight.

The chamber A is suitably dimensioned to contain the ballast B and the starter switch S. The ballast B is mounted on the rear wall 1 by suitable bolts 7 (Figs. 2, 3 and 5). The starter switch S is mounted on the inner face of a plate 8 by bolts 9. The plate 8 is mounted over an aperture 10 in the front wall 4 by bolts 11, so

2

that the switch S is removably mounted in the chamber A.

The upper chamber C is formed by an element N and end plates N' attached thereto. The element N is fabricated to form the parallel side walls 12 and 13 and the semi-circular bottom 14. The chamber C being suitably dimensioned to contain the tubular lamp L is approximately twice the length of the chamber A, the element N projecting symmetrically from the end walls 2 and 3 of the chamber A (Fig. 1).

As clearly shown in Figs. 4 and 5, the chamber C is mounted on the chamber A so that the chamber C is inclined at approximately 45° to the vertical. To effect this relation, the rear wall 1 of the chamber A exceeds in height the front wall 4 and has its upper edge attached to the element N by suitable bolts 15, the joint being packed with suitable packing to form an air-tight joint. The wall 4 has an inwardly bent portion 4–*a* on which is an outwardly turned flange 16 attached to the element N by suitable bolts 17, this joint also being similarly packed. The bottom 14 of the chamber C is received in suitable concave seats 18 in the upper edges of the end walls 2 and 3 of the chamber A.

Each end plate N' has an inwardly turned flange 19 which is bolted to walls 12 and 13 and bottom 14 to removably attach the end plates N' to the element N, the joints being sealed as above described.

The chamber C is closed by a transparent cover 20 seated on the outwardly turned flanges 21 on the outer edges of the walls 12 and 13 and the inwardly turned flanges 22 on the inner edges of the end plates N'. The flanges 19 and 22 of the plates N' are so related as to provide notches 22' to receive the ends of the flanges 21 so that flanges 21 and 22 lie in a common plane (Figs. 5 and 7). The cover 20 is removably attached to the chamber C by a bezel 23 attached to the flanges 21 and 22 by bolts 24, the joint being packed, and having a peripheral, depending flange 25 embracing the edges of the cover 20, the flanges 21 and 22 and the end plates N'.

Each end plate N' is provided with a lamp socket 26 to receive the prongs 27 of the lamp L, passed through an insulated retainer L' seated in chamber C and bearing on walls 12 and 13 thereof, so that the retainer L' being non-rotatably mounted prevents rotation of the lamp L. It is obvious that only one retainer L' suffices. Each socket 26 is attached to its plate N' by bolts 26' tapped into socket 26.

It will be noted (Figs. 2, 3 and 5) that the

element N is provided with a series of apertures 28 so disposed as to form ports to afford communication between the upper portion of the chamber A and the chamber C for a purpose presently to be explained.

I will now describe the circuit (Fig. 3) for the lamp and its auxiliaries installed in my improved casing. The power leads *a* and *b* are carried in an insulated cylindrical case 29 introduced into the chamber A through a suitable opening 30 in the wall 2 provided with a suitable insulating gasket 31 to provide a substantially air-tight fit for the case 29 therein. The leads *a* and *b* are connected to the ballast B. A wire c connects the ballast B with the socket 26 at the right end of chamber C as shown in Fig. 3, passing through an opening 32 in the element N. A wire *d* connects the socket 26 on the right with the switch S, also passing through the opening 32. A wire *e* connects switch S with the socket 26 at the left end of chamber C, passing through an opening 33 in element N. A wire *f* connects the socket 26 at the left with the lead *a*, passing also through the opening 33.

I will now describe the use and operation of my improved case. With the case assembled and supplied with the lamp L, ballast B, starter switch S and wires *a* to *f*, as shown in Figs. 3 and 5, when current is supplied through leads *a* and *b*, the starter switch S and the ballast B function to cause lamp L to function. It is obvious that the high temperature of the air in chamber A due to functioning of ballast B tends to raise the temperature of the air in chamber C to a desired degree. This effect is due to the sealed joints of the device and the ports 28 affording communication between chambers A and C.

As shown in Fig. 5, the safety switch S can easily be replaced, if required, by releasing plate 8 and removing it and the switch S from chamber A.

Should it be necessary to replace lamp L, it can be done without removing cover 20, in the following manner. The end plate N' adjacent the retainer L' is removed and its associated parts separated (Fig. 7) as follows: bolts 26' are removed, the plate N' is unbolted and removed, the socket 26 is manipulated into a position to release prongs 27 and it is then removed, the retainer L' is slipped off of the prongs 27, the tube L can then be manipulated to release its prongs 27 at its other end from the socket 26 at the other end, and is then withdrawn from chamber C. To mount a new tube L in the case, the following method serves. The tube L is inserted into the chamber C through its end which has been opened as above-described, and is manipulated to seat its prongs 27 in the socket 26 at the unopened

end of the chamber C. The retainer L' is then replaced on prongs 27 at the open end of the casing C. The removed socket 26 is replaced by manipulating it to engage the exposed prongs 27. The end plate N' is replaced and bolts 26' set up to retain the assembled parts, joints being resealed.

Having described my invention, what I claim is:

1. In a lamp case, the combination of a quadrilateral chamber having a side wall and a pair of end walls formed by a single element, and a second element attached to said first element to form the other side wall of said chamber, one of said elements having a passage therethrough; a door removably attached to said last-mentioned element to close said passage; a second chamber mounted on said first chamber and having two side walls and a bottom wall closing the top of said first chamber, said bottom wall having a plurality of apertures forming ports communicating between said chambers; a pair of removable plates forming the end walls of said second chamber; sockets, for mounting the lamp therein, mounted on the inner faces of said plates, respectively; and a translucent cover forming the top wall of said second chamber.

2. In a case for a fluorescent lamp, its ballast and its starter switch, the combination of two side walls, one of said side walls having means for supporting said ballast in the case, and the other of said side walls having a passage therethrough; a door removably mounted on said last-mentioned side wall, to close said passage, said door having means for supporting said switch in the case; two end walls attached to said side walls; a top wall mounted on said side walls and said end walls, and having a plurality of apertures therethrough to provide air passages; a pair of side walls projecting from said top wall; a pair of end walls removably mounted on said top wall and said projecting side walls; a translucent wall removably mounted on said projecting side walls and said removable end walls; and means for mounting the lamp on said removable end walls, in said case.

EARL T. ROBERTS.

REFERENCES CITED

The following references are of record in the file of this patent:

UNITED STATES PATENTS

Number	Name	Date
2,317,845	Boucher	Apr. 27, 1943
2,342,570	Biller	Feb. 22, 1944
2,392,202	Tornblom	Jan. 1, 1946
2,413,666	Tuck et al.	Dec. 31, 1946
2,428,827	Beck	Oct. 14, 1947