July 16, 1929 R. M. ADAM 1,720,987

BUILDING APPARATUS

Filed Aug. 13, 1923 2 Sheets-Sheet 1

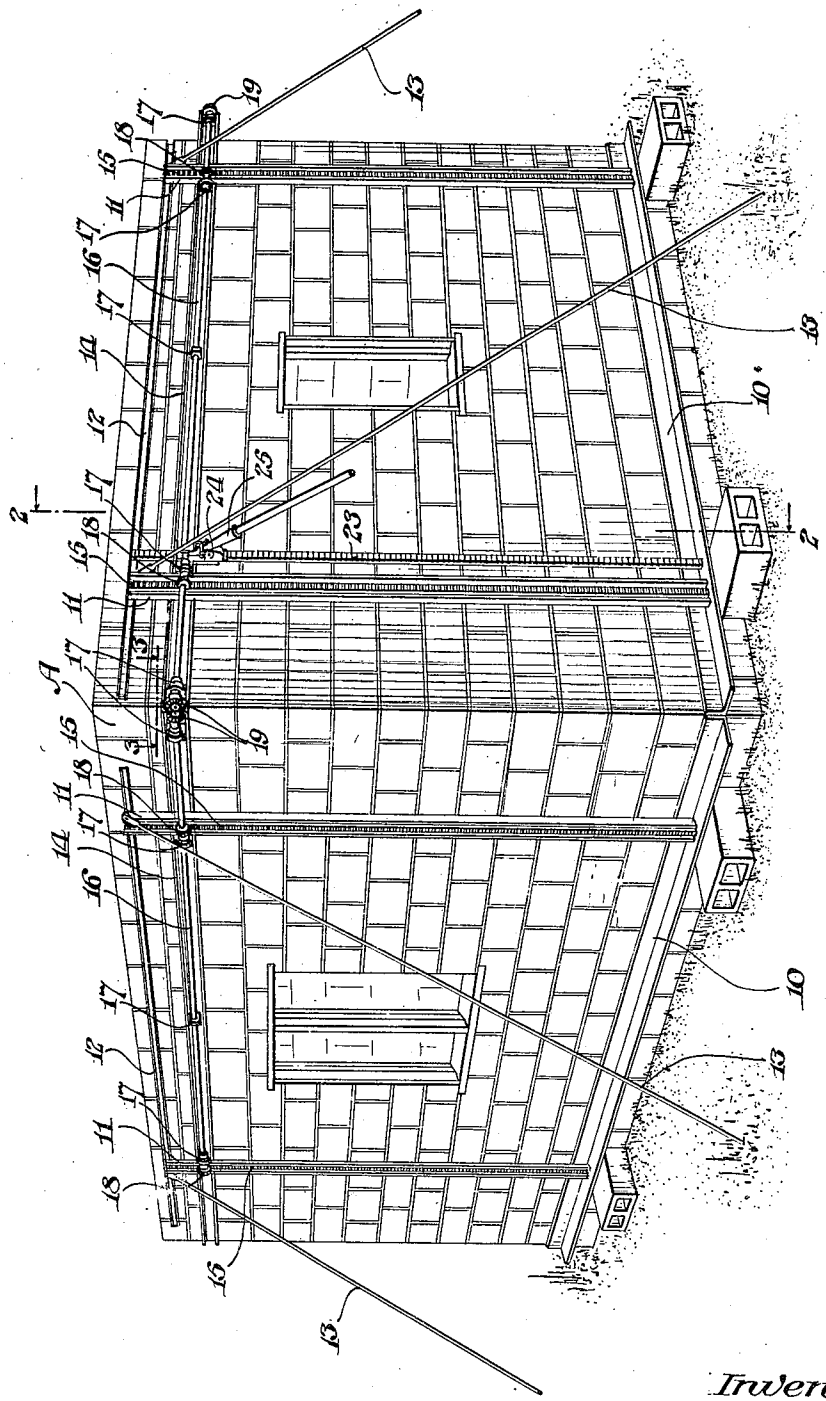

Fig. 1

Inventor:
Robert M. Adam,
By C. B. Desjardins
Attorney.

July 16, 1929. R. M. ADAM 1,720,987

BUILDING APPARATUS

Filed Aug. 13, 1923 2 Sheets-Sheet 2

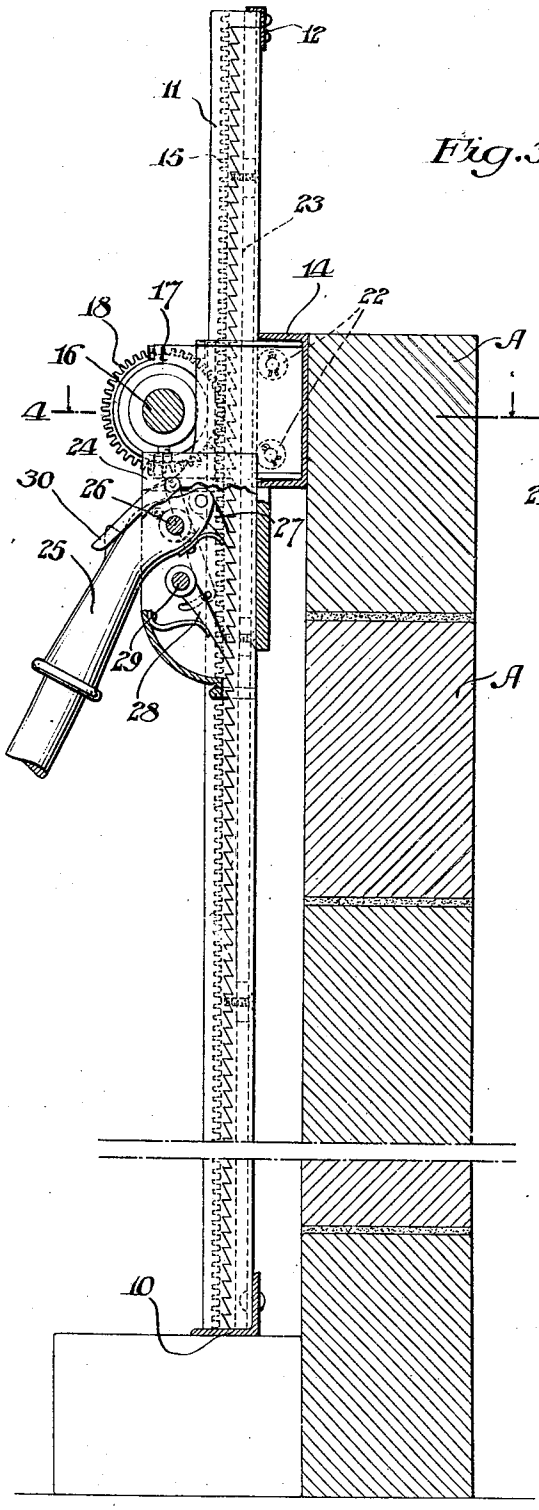

Fig. 2.

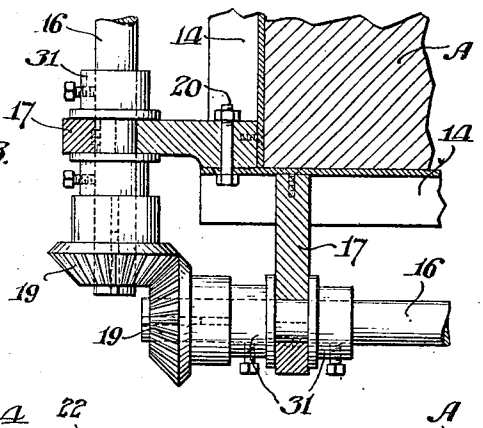

Fig. 3.

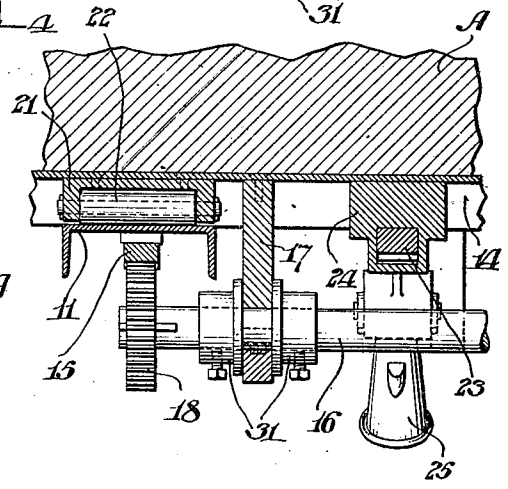

Fig. 4.

Inventor:
Robert M. Adam,
By E. B. Stephens
Attorney.

Patented July 16, 1929. 1,720,987

UNITED STATES PATENT OFFICE.

ROBERT M. ADAM, OF PHILADELPHIA, PENNSYLVANIA, ASSIGNOR TO JOHN H. McCLATCHY, OF PHILADELPHIA, PENNSYLVANIA.

BUILDING APPARATUS.

Application filed August 13, 1923. Serial No. 657,194.

My invention relates to improvements in building apparatus and has to do, more particularly, with apparatus for use in laying brick, concrete block, stone, or the like, in erecting buildings or walls.

Heretofore, the laying of brick, concrete block, and the like, in erecting buildings and walls, has been a job for highly skilled workmen. The frequent use of plumb line and level has been necessary in order to keep the wall truly vertical and the courses straight. This has rendered the work slow and expensive. The chief object of my invention is to provide an apparatus by the use of which an unskilled workman can erect walls or buildings and lay concrete blocks or bricks so as to form walls which will be perfectly true, and plumb, without the frequent use of plumb line and level as in the past. It is the object of my invention to provide an apparatus which will reduce very much the cost of erecting walls or buildings of brick, concrete block, or the like, by permitting the use of unskilled and inexpensive labor and reducing the time necessary for construction. A further object of my invention is to provide an apparatus of this nature which is simple and easy to erect and take down, so that it can be moved very readily from one job to another. A further object of my invention is to provide an apparatus of this character which will not be in the way, to any considerable extent, and which will not interfere with access to the building operation. A further object of my invention is to provide building apparatus of the kind described having a straight-edge which can be raised or lowered readily and which will be maintained horizontal and in plumb, after the apparatus has once been set up and trued, without the necessity of a truing operation whenever the straight-edge is raised or lowered. A further object of my invention is to provide an apparatus of this character in which the straight-edge can be raised or lowered from the scaffold without any difficulty. A further object of my invention is to provide such an apparatus with a series of straight-edges, one for each of the several walls of a building, and means for raising them simultaneously from a common point while maintaining them all level and in plumb.

Further objects, and objects relating to details and economies of construction and operation, will definitely appear from the detailed description to follow. In one instance, I accomplish the objects of my invention by the devices and means described in the following specification. My invention is clearly defined and pointed out in the appended claims. A structure constituting a preferred embodiment of my invention is illustrated in the accompanying drawings, forming a part of this specification, in which:

Fig. 1 is a perspective view showing my building appartaus in operative relation to a building erected by it.

Fig. 2 is a vertical, sectional view through the apparatus and one wall of the building, taken on line 2—2 of Fig. 1, the side of the jack being broken away to show the pawls and their engagement with the rack.

Fig. 3 is a detail, sectional view taken at the corner of the building on the line 3—3 of Fig. 1, and

Fig. 4 is a detail, sectional view taken on the line 4—4 of Fig. 2.

In the drawings, the same reference numerals refer to the same parts throughout the several views and the sectional views are taken looking in the direction of the arrows at the ends of the section lines.

In general, my invention consists in a framework, which is erected on the site of the wall or building to be erected, and a straight-edge carried by the framework in such a way that it can be raised or lowered, as required. This straight-edge has a surface against which the bricks or blocks are laid and which insures their being set truly vertical or plumb, and an edge which constitutes a horizontal guide so that the course may be kept level. The framework is to be trued and leveled when erected and the straight-edge is so mounted on the framework that it is kept level and plumb notwithstanding the raising and lowering movements imparted to it. It is desirable that both ends of the straight-edge be raised or lowered equal distances, simultaneously, and I propose to accomplish this by providing a shaft, or its equivalent, carried by the straight-edge, and having pinions fixed to it which mesh with vertical racks forming a part of the framework. I propose to move the straight-edge vertically by means of a toothed rack forming a part of the framework with which the pawls of a lifting jack fastened to the straight-edge engage. The jack may be of any suitable construction.

This apparatus may be used for erecting buildings and, in such case, I propose to erect a frame alongside each wall of the building and to provide a straight-edge for each wall. These several straight-edges may be connected and, in order to cause them to move together, I propose to provide the shafts of the respective straight-edges with intermeshing pinions so that the shafts are forced to turn together when any one of the straight-edges is raised or lowered. This permits me to raise them all from a common point.

The apparatus illustrated in the accompanying drawings constitutes an embodiment of my invention which I have found to work very satisfactorily and which I will now describe in greater detail. Referring to the numbered parts of the drawings, I have shown a framework consisting of the lower, horizontal, angle member, 10, the vertical channels, 11, and the upper, horizontal, angle member, 12. These horizontal and vertical members are rigidly connected to form the framework of the apparatus. This framework is erected so that the channel members, 11, are truly vertical and it may be braced and sustained in erected position by the braces, 13. This framework is erected alongside the wall to be constructed and, in the case of a building having several walls, a frame of this sort is erected alongside each wall. In Fig. 1, I have shown two walls of a building, at right angles to each other, and one of these frames erected alongside each wall. The straight-edge is supported by the framework in such a way that it can be raised and lowered and that it is maintained level and plumb by the framework. In the construction illustrated, the straight-edge consists of a horizontal channel, 14, which is disposed with its open side toward the vertical channels, 11. A shaft, 16, is journaled in bearings, 17, fastened in the straight-edge or channel, 14, and extends outside of the channels, 11, as shown in Fig. 1. Collars, 31, may be fastened adjustably to the shaft, 16, on either side of the bearings, 17, to prevent longitudinal shifting of the shaft. Pinions, 18, are fixed on the shaft, 16, and mesh with vertical racks, 15, which are rigidly fastened to the vertical channels, 11, of the frame. In order to facilitate vertical movement of the straight-edge, 14, on the channels, 11, I provide the brackets, 21, which are fastened to the straight-edge, 14, and carry rollers, 22, engaging the base of the adjacent channel, 11.

In order to raise and lower the straight-edge, I provide the vertical rack, 23, having ratchet teeth arranged with the bases of the teeth uppermost. The upper end of the rack, 23, is fastened to the upper horizontal member, 12, and the lower end to the horizontal member, 10, so that it constitutes a part of the frame. A lifting jack, 24, is fastened to the channel, 14, upside down, that is, with the base of the jack uppermost, and the rack, 23, extends through this jack in the place of the rack usually found in lifting jacks. The pawl mechanism of the jack cooperates with the teeth of said rack and consists of the lifting pawl, 27, pivoted on the operating lever, 25, at 26, and the holding pawl, 28, pivoted on the jack casing, at 29. A reversing lever, 30, is provided which is used to change the action of the pawl mechanism from raising to lowering, and vice versa. This lifting jack may be of the usual well known construction and, therefore, I do not describe it in greater detail here. It is to be noted that the rack, 23, is fixed, while the jack casing, 24, is movable with the channel, 14, and, therefore, when the operating lever 25, is actuated, the straight-edge, 14, is caused to move vertically on the channels, 11.

At the corner of the building, the ends of the channels, 14, working on the respective frames, abut each other and are fastened together by the bolts, 20. Bevel pinions, 19, are rigidly fastened on the adjacent ends of the shafts, 16, and mesh with each other so that both shafts are caused to turn as one. As a result, if any one of the several channels, 14, is moved vertically, the other channels 14, are forced to move with it so that all of the straight-edges are moved simultaneously and are maintained perfectly level and plumb.

In using my apparatus for erecting a building such as shown in Fig. 1, the straight-edges, 14, are lowered to their lowermost position. The framework, of course, has been trued up so that the vertical channels, 11, are perfectly plumb. The reversing lever, 30, of the jack, 24, is set so that the jack will be lifted as the handle is operated. The blocks, A, of the first course are laid up against the straight-edges. The channels, 14, have comparatively broad bases which are maintained vertical by the channels, 11. By laying the blocks flush against the base of the channel, 14, the course is kept in plumb. The upper edge of the channel, 14, constitutes a guide or gauge and by laying or setting the blocks, A, so that their upper surfaces are flush with the upper edge of the channel, the course is kept level. From time to time, the operator, by working the handle or lever, 25, of the jack, 24, raises the straight-edges to bring them into position to form a guide or gauge for the next course to be laid. The straight-edges are connected so that they move vertically simultaneously and they are all raised from the single jack. This raising may be done by the workman from the scaffold on which he is at work, thus expediting the work since it is not necessary to descend to the ground each time the apparatus is to be adjusted at the start of a fresh course. Vertical movement is imparted to the connected straight-edges by the jack, 24, and all parts

of the connected straight-edges are caused to have a uniform vertical movement due to the pinions on the shafts, 16, meshing with the racks, 15, of the vertical channels, 11. As the channel, 14, is lifted by the jack, the meshing of the adjacent pinion, 18, with rack, 15, imparts a rotative movement to the shaft, 16, and a corresponding rotation to each of the several pinions fastened to the shafts, 16. Consequently, there has to be the same vertical movement of channel, 14, at each of the several racks, 15. The lifting jack or pawl mechanism furnishes a cheap, simple and convenient means for raising and lowering the straight-edges but other means may be used for accomplishing this.

I may use my apparatus arranged on three sides of a square building and, in this case, it consists of three frames each carrying a vertically-movable straight-edge, the three straight-edges being connected so as to be moved together from a common source of power. In Fig. 1, two sides of such an arrangement are shown. My invention is applicable to the construction of straight walls and also buildings of different shape from that shown. It will be evident that, if the walls of the building to be erected are not at right angles to each other, the frames and straight-edges will be arranged at the proper angle and suitable means provided for transmitting equal rotative motion from the one shaft to the other.

The apparatus is simple and relatively inexpensive and may be erected very quickly and cheaply in the proper position with reference to the building to be erected. It can be trued up very easily at the beginning of the operation and will need no further attention thereafter. It will be evident that all the workman has to do is to lay the bricks or blocks up against the straight-edges so skilled labor is not needed. The apparatus is so simple that it will not be in the way of or interfere with the workmen and it can be moved very readily from one job to another.

I am aware that the building apparatus shown may be changed considerably without departing from the spirit of my invention and, therefore, I claim my invention broadly, as indicated by the appended claims.

Having thus described my invention, what I claim as new and useful and desire to secure by Letters Patent is:

1. An apparatus of the class described comprising a frame to be erected alongside the wall to be built, a horizontal beam slidably mounted on said frame, means engaging said beam at a single point for moving the same vertically, and means for maintaining said beam horizontal during such vertical movements.

2. An apparatus of the class described comprising a frame to be erected alongside the wall to be built and including a plurality of vertical racks, a horizontal channel slidably mounted on said frame with its open side toward the frame, a shaft journaled on said channel and extending on the opposite side of said frame from said channel, pinions fixed on said shaft and each meshing with one of said racks, and means for raising and lowering said channel.

3. An apparatus of the class described comprising a frame to be erected alongside the wall to be built, a vertical rack secured to said frame, a horizontal straight-edge slidably mounted on said frame, a lifting jack fastened to said straight-edge with its pawls engaging said rack, and means for insuring equal vertical movement of all parts of said straight-edge as said jack is operated.

4. An apparatus of the class described comprising a frame to be erected alongside the wall to be built, a vertical rack secured to said frame and having ratchet teeth, a horizontal straight-edge slidably mounted on said frame, a lifting jack fastened to said straight-edge with its pawls engaging the ratchet teeth of said rack, a shaft journaled on said straight-edge, a plurality of pinions fixed on said shaft, and a plurality of vertical racks fastened to said frame and meshing with said pinions.

5. An apparatus of the class described comprising a plurality of frames to be erected alongside the walls of a building to be constructed, a horizontal straight-edge slidably mounted on each frame, means for connecting the several straight-edges so that they will move vertically together, and means for raising and lowering said straight-edges simultaneously from a single point.

6. An apparatus of the class described comprising a plurality of frames to be erected alongside the walls of a building to be constructed, a horizontal straight-edge slidably mounted on each frame, means for connecting said straight-edges together so that they will move as one, means for raising and lowering said straight-edges from a single point, and means for maintaining the straight-edges horizontal during such movement.

7. An apparatus of the class described comprising a plurality of frames to be erected alongside the walls of a building to be constructed, a horizontal straight-edge slidably mounted on each of the frames, a shaft journaled on each straight-edge, vertical racks secured to said frames, pinions fixed on said shafts and meshing with said racks, meshing bevel pinions fixed on adjacent ends of said shafts, and means for raising and lowering said straight-edges.

8. An apparatus of the class described comprising a plurality of frames to be erected alongside the walls of a building to be con-

structed, a horizontal straight-edge slidably mounted on each frame, means connecting adjacent ends of said straight-edges so that they will move as one, a shaft journaled on each straight-edge, pinions fixed on said shafts, vertical racks secured to said frames and meshing with said pinions, bevel pinions fixed on adjacent ends of said shafts and in mesh with each other, and means for raising and lowering said straight-edges.

9. An apparatus of the class described comprising a plurality of frames to be erected alongside the walls of a building to be constructed, a horizontal straight-edge slidably mounted on each frame, a shaft journaled on each straight-edge, pinions fixed on said shafts, vertical racks secured to said frames and meshing with said pinions, means connecting said shafts so that they turn as one, and means for raising and lowering said straight-edges from a single point.

10. An apparatus of the class described comprising a plurality of frames to be erected alongside the walls of a building to be constructed, a horizontal straight-edge slidably mounted on each frame, a shaft journaled on each straight-edge, pinions fixed on said shafts, a plurality of vertical racks secured to said frames and meshing with said pinions, means connecting adjacent ends of said shafts whereby they turn as one, a vertical rack secured to one of said frames, and a lifting jack fastened to one of said straight-edges with its pawls engaging said last mentioned rack.

In testimony whereof, I affix my signature.

ROBERT M. ADAM.