June 12, 1962 H. LOCHER 3,039,051

APPARATUS FOR GAGING TEXTILE MATERIALS

Filed July 18, 1960 2 Sheets-Sheet 1

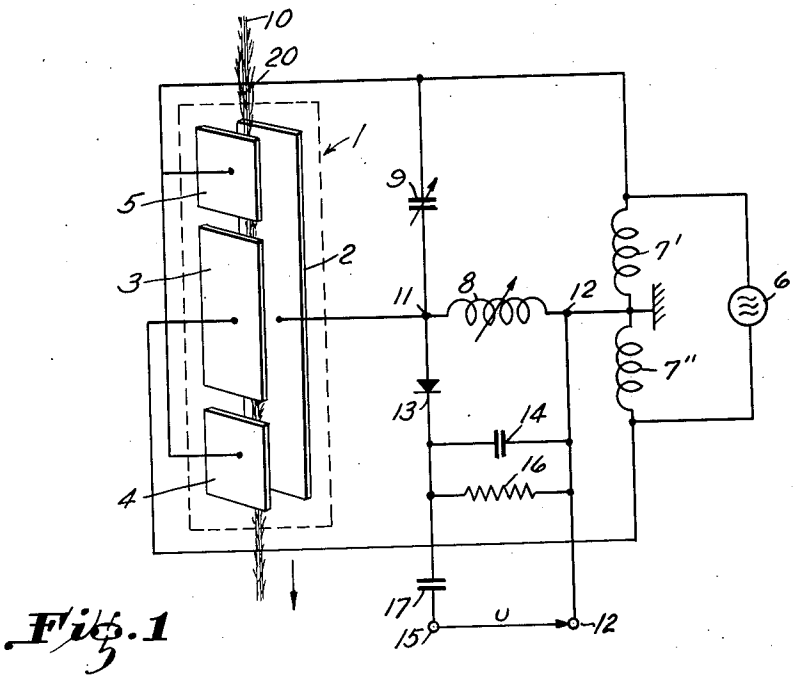

Fig. 1

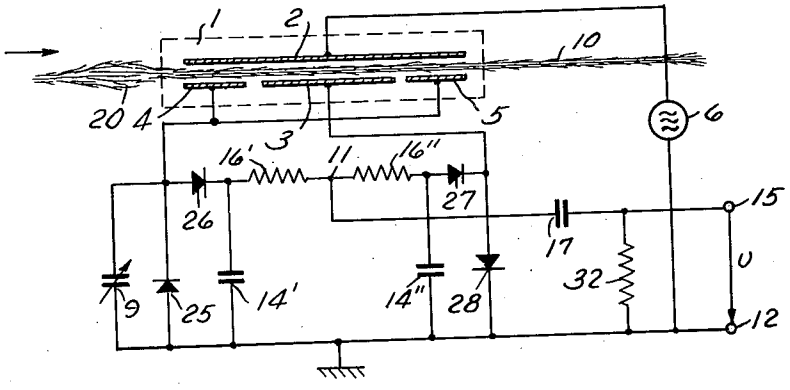

Fig. 2

INVENTOR
HANS LOCHER

BY K. A. Mayer

ATTORNEY

June 12, 1962 H. LOCHER 3,039,051

APPARATUS FOR GAGING TEXTILE MATERIALS

Filed July 18, 1960 2 Sheets-Sheet 2

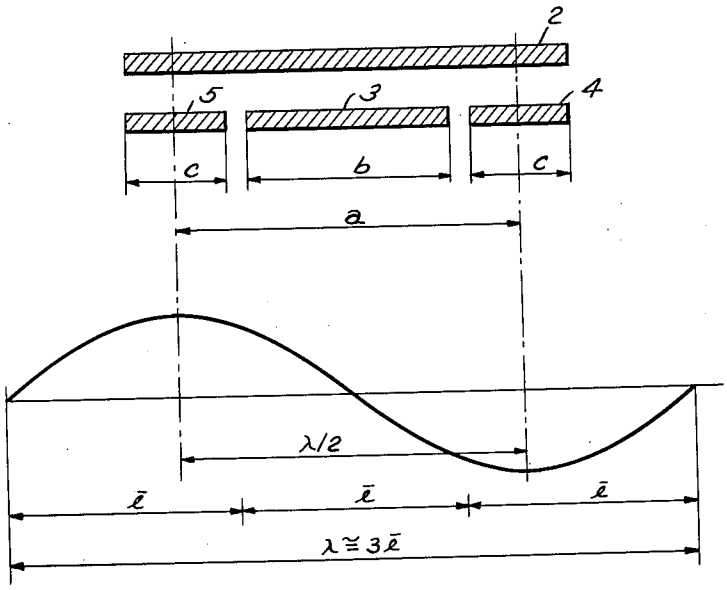

Fig. 3

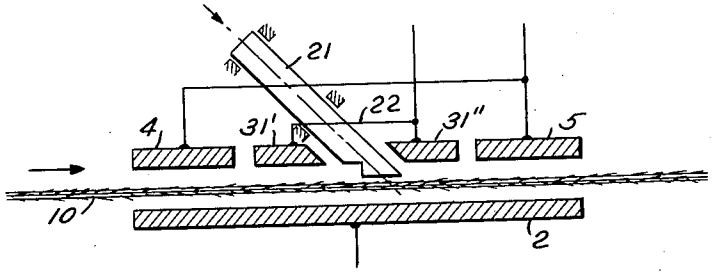

Fig. 4

INVENTOR
HANS LOCHER

BY

ATTORNEY

United States Patent Office 3,039,051 Patented June 12, 1962

3,039,051

APPARATUS FOR GAGING TEXTILE MATERIALS

Hans Locher, Uster, Switzerland, assignor to Zellweger Ltd., Uster, Factories for Apparatus and Machines, Uster, Switzerland, a corporation of Switzerland

Filed July 18, 1960, Ser. No. 43,592
Claims priority, application Switzerland Aug. 12, 1959
8 Claims. (Cl. 324—61)

This invention relates to the determination of spontaneous cross sectional variations in textile material and is an improvement in or a modification of the invention set forth in my copending application Serial No. 811,086, filed May 5, 1959.

The parent application relates to a method and device for determining spontaneous cross sectional variations in textile material, particularly in yarns, rovings and slivers in which the textile material to be examined is drawn through a combination of electrical measuring condensers in such a manner that it passes successively through at least two partial condensers. Each of these partial condensers is connected in a branch of an electrical bridge so that there is produced as the output of the bridge an electrical signal corresponding to the difference in the capacities due to the passage of the textile material through the condensers.

The parent application also describes means by which the capacity variations occurring in the condensers are utilized for eliminating yarn defects which exceed a given magnitude.

The method of the parent application has the object of differentiating between short spontaneous cross sectional variations, which represent almost exclusively yarn defects, and the—non-defective—long-wave cross sectional variations due to the spinning process; short cross sectional variations influence simultaneously only one of the two condenser fields and thereby cause large capacity differences in the measuring fields, while the long-wave cross sectional variations produce the same capacity variations in both condenser fields almost simultaneously so that the difference between them is very small.

The construction of the measuring condensers must in each case take into account the raw material which is to be examined, because the mean staple length of the material influences decisively both the length of the spontaneous—defective—cross sectional variations, and also the length of the—non-defective—long-wave cross sectional variations. Since any spun yarn naturally also has short-wave—non-defective—cross sectional variations, due to incidental thread distribution, the electrical signal corresponding to such variations must be allocated a minimum value, which will not indicate a yarn defect. In other words, the threshold value, which when exceeded results in severing and elimination of the defective piece, must be fixed above this minimum value.

In practice a spontaneous cross sectional variation of the textile material, which in size and form qualifies as defective and should be eliminated, may be located within a thin section of the material, so that the total mass of the textile material in one of the two condensers is not substantially greater than the fibre mass in the other condenser, which at that moment may contain a rather thick piece of yarn. In such a case, even a spontaneous cross sectional variation considerably larger than can be tolerated will not be registered. On the other hand, a thickening (nap), insignificant in itself and not to be regarded as an actual defect, which could otherwise be disregarded may occur in a thick, but still acceptable section of the textile material. If, when this section is passing through one of the two condensers, a somewhat thin, but also defect-free section is passing through the other condenser, the difference between the two capacity values may be large enough to produce an undesirable operation of the measuring apparatus and the elimination of a non-defective piece of yarn. In other words, the determination of spontaneous cross sectional variations by the measurement and comparison of only two successive lengths of material is not always sufficiently reliable.

It will be clear from the above explanation that in some cases the cleaning or defect-removing device, operated for example by the measuring device, is operated to remove a thickened part which according to its actual size ought not to be removed; in other cases again, defective places in the textile material may pass the measuring member without operating the cleaning device so that the cleaned textile material still contains some yarn defects, which may interfere with the subsequent processing.

The principal object of this invention is to overcome these limitations of prior methods and apparatus for gaging textile materials.

According to the invention, the material to be gaged is passed in succession through three electrostatic fields, a central and two laterally disposed fields, and the effect produced by one section of the material on the central field is continuously compared with the sum of the effects produced by other sections of the material on the lateral fields and fault-detecting mechanism is selectively energized in accordance with predetermined minimum magnitudes of the differences between the compared effects.

In the preferred apparatus according to the invention, the three fields are set up by alternating potentials applied to a condenser combination comprising a first central condenser and two partial condensers, one disposed on each side of the central condenser and electrically connected in parallel to form a second condenser varying in capacitance in accordance with the mean of the capacitances of the two partial condensers. All three condensers may have one common electrode if desired and the two partial condensers may have a combined capacity equal to that of the central condenser.

By proper choice of the lengths and spacings of the electrodes of the central and partial condensers the combination may be designed to meet the particular requirements of different materials as explained in the following specification and illustrated in the drawing wherein:

FIG. 1 shows diagrammatically a measuring condenser with a bridge circuit.

FIG. 2 illustrates another electrical circuit suitable for the operation of the measuring condenser.

FIG. 3 shows the dimensions of a measuring condenser with reference to the staple length and cross sectional variation of a fluctuation, designated as distortion wave, in the textile material to be examined, as a function of the length.

FIG. 4 illustrates a constructional detail.

FIG. 1 shows a measuring condenser combination **1** comprising a common electrode **2** and three electrodes **3**, **4** and **5** insulated therefrom. The two outer electrodes **4** and **5** are electrically connected together and, with a coil **7'**, form one branch of an electrical bridge circuit; the middle electrode **3** and a coil part **7''** provide the other branch of the electrical bridge circuit. The bridge circuit is fed from an alternating voltage source **6** and the output voltage occurs in known manner at the points **11** and **12**. The textile material **10** to be examined passes through this measuring condenser combination **1**, for example downwardly in the direction of the arrow.

The result of this arrangement of the electrical circuit and the partial condensers is that when a yarn defect **20** in the textile material **10**, the defect being generally visible as a thickened portion, passes through the com-

bination 1 only the outer partial condenser 5—2 at first undergoes a capacity variation; the partial condenser 4—2 is not yet affected. Consequently, only the mean of the two capacities of the partial condensers 4—2 and 5—2 is effective as total capacity variation. As soon as the yarn defect 20 enters the middle condenser 3—2, it also leaves the outer partial condenser 5—2. This now produces a large capacity variation in the middle condenser 3—2, while the capacity of the outer partial condenser 5—2 is again determined by a length of yarn of normal cross section following the yarn defect 20 considered. In the further forward movement of the textile material 10, the yarn defect 20 finally enters the lower partial condenser 4—2, in which it again produces a capacity variation analogous to that produced on entry into the outer partial condenser 5—2. This last capacity variation, however, will again be averaged and therefore reduced, due to the electrical parallel connection of the two outer partial condensers 4—2 and 5—2.

For the bridge circuit according to FIG. 1 to be able to distinguish between thickened and thin portions of the textile material 10, it is necessary to de-tune the bridge circuit so that the working point of the bridge circuit is always situated on the same flank of its characteristic. This de-tuning is effected by means of a compensating trimmer 9. The direct current component occurring in the electrical signal U in consequence of the said de-tuning is separated by means of the condenser 17.

It will be understood that if the bridge is de-tuned to work on the other flank of its characteristic, it could be used to detect only excessively thin sections in the material; and also that if the bridge is tuned, the circuit can be adapted to respond to defects of either type.

Whereas FIG. 1 shows a conventional bridge circuit with inductive and capacitive branches, FIG. 2 represents a purely capacitively acting bridge circuit. The capacity variations occurring in the condensers 5—2 and 4—2 or 3—2 are converted into direct current voltage fluctuations in a rectifier circuit with rectifiers 25, 26, 27 and 28 as follows:

The voltages occurring across smoothing condensers 14′ and 14″ correspond to the capacity values of the condensers 4—2 and 5—2 or 3—2, respectively. These two direct current voltages have opposite polarity to earth. The direct currents flowing in the series resistances 16′ and 16″ are compensated in the potential 11. The capacity variations produced by the textile material set up voltage fluctuations relatively to earth in the potential 11, and after separation of any still existing direct current component by the condenser 17 are available at the terminals 15—12 as alternating current voltage.

The properties of textile materials, such as are represented by yarns, rovings and slivers, depend as is known very strongly on the mean staple length $\bar{l}$ of the fibre material. In particular, the variation in weight per unit length in the direction of the material is closely bound up with the mean staple length. The shortest and at the same time the most intensive cross sectional variations occurring in the course of the spinning process are the so-called drafting waves, the wave length λ of which corresponds approximately to three times the staple length $\bar{l}$, while the cross sectional fluctuations of other wave lengths (both smaller and larger) are as a rule less intensive. Even textile material free from defects always shows such drafting waves, which do not cause any trouble in subsequent processing.

The great majority of yarn defects (spontaneous cross sectional variations), however, may also be referred in their length dimensions to the mean staple length $\bar{l}$.

It is therefore advantageous to use this mean staple length $\bar{l}$— which may have important differences between different materials and also considerable fluctuations between materials of the same kind—as material constant for the dimensions of the measuring devices concerned.

The present invention ensures that the unavoidable drafting waves will not be erroneously evaluated as spontaneous cross sectional variations which are to be eliminated. This is effected by advantageous dimensioning of the condenser electrodes.

The dimensions of the measuring condenser combination 1 must in fact be so selected that as far as possible simultaneously in one of the outer partial condensers, for example in the partial condenser 5—2, there is a cross sectional maximum of the drafting or stretch wave, when in the other outer partial condenser 4—2 there is a cross sectional minimum of the drafting wave of the textile material 10 considered. This condition is shown diagrammatically in FIG. 3. In this way, a capacity is always obtained as sum of the capacity variations in the two outer partial condensers 5—2 and 4—2 which is not very different from the mean value of the yarn cross section.

This condition is then sufficiently satisfied when the distance a of the centers of the outer partial condensers 4—2 to 5—2 is approximately equal to half the wave length λ or equal to 1.5 times the mean staple length $\bar{l}$ (FIGURE 3) of the textile material. Since, however, the said wave lengths do not have any constant length, either in different materials or within one and the same textile material, the dimensions of the measuring condenser combination 1 may also vary within certain limits, as will be explained further below.

In the case of cotton fibres, the mean staple length is about 25 mm., which value covers most of the qualities processed. Wool fibres are longer on the average; their mean staple length is about 45 mm.

The intensive drafting waves accordingly posses in cotton a wave length of 3 times 25 mm.=75 mm.; in wool, on the contrary, they have a wave length of 3 times 45 mm.=135 mm. (see FIGURE 3).

The distance a between the centers of the outer condenser fields accordingly can be equal to one or two times the mean staple length; in a measuring condenser combination for cotton this gives a distance a between the electrode centers of from 25 mm. to 50 mm., and for one for wool a distance a of from 45 mm. to 90 mm.

The central condenser field should have a length b between 0.7 to 1.4 times the mean staple length. This corresponds to an electrode length b of from 17.5 to 35 mm. in the case of cotton and 30 mm. to 60 mm. length in the case of wool.

The length c of each of the partial condenser fields themselves is made advantageously approximately equal to half the length b of the central condenser field; their length c can therefore be assumed to be between 0.35–0.7 times the mean staple length. Referred to cotton, this gives an electrode length c of from 9 mm. to 18 mm., while for use with wool, there is an electrode length c of from 16 mm. to 32 mm.

The electrical signal U occurring at the terminals 12—15 on the passage of a yarn defect 20 through the measuring condenser combination 1 is used for example to operate a severing device, which cuts or breaks the textile material in the vicinity of the yarn defect. For this purpose, a magnetically operated cutter may act on the yarn. Other severing devices operate by moving a sliding piece 21 magnetically towards the textile material 10 (see FIGURE 4); as soon as the yarn defect comes into contact with the sliding piece, the sliding piece by self-acting closure is forced further towards the textile material, whereby a powerful clamping effect is exerted on the textile material such that the latter is held fast and is broken by the yarn tension of the pull-off device which continues to operate.

In order to reduce the space required by the measuring condenser combination 1, combined with the serving device the central condenser electrode 3 is advantageously divided so that the actual severing member (i.e. sliding piece 21) can pass through the opening thus

formed. The two electrode parts 31′ and 32″ are then connected electrically by a conducting connection 22.

Due to the fact that the length *c* of the outer partial electrodes 4 and 5 is made equal to half the length *b* of the central electrode 3, the sum of the two partial capacities 4—2 and 5—2 will be equal to the capacity of the central electrode 3—2. Small differences in these capacity values can be compensated by electrical means contained in the bridge circuit, for example by varying the resistances 16′ and 16″ (FIGURE 2), so that the bridge is in equilibrium as long as the same amounts of textile material are contained in the two outer partial condensers on the one hand and in the central condenser on the other hand.

What is claimed is:

1. In a differential measuring circuit for detecting spontaneous cross sectional variations in textile material continuously advancing along a path, a measuring condenser system comprising a central and two lateral condensers disposed in sequence along the path with the electrodes of each condenser on opposite sides of the path and means for connecting the condenser system into the circuit with the lateral condensers in parallel and in differential relation to the central condenser, the lateral condensers each having a capacitance substantially equal to one half the capacitance of the central condenser.

2. Apparatus according to claim 1 in which the centers of the lateral condensers are spaced along the path a distance from 25 to 50 millimeters for use with cotton material.

3. Apparatus according to claim 1 in which the centers of the lateral condensers are spaced apart a distance substantially equal to one half the wave length of the drafting wave to minimize the effect of the drafting wave on the detected variations.

4. Apparatus according to claim 1 in which the centers of the lateral condensers are spaced along the path a distance from 45 to 90 millimeters for use with wool material.

5. Apparatus according to claim 1 in which the central condenser has an electrode extending along the path for a distance from 17.5 to 35 millimeters.

6. Apparatus according to claim 1 in which the central condenser has an electrode extending along the path for a distance of from 30 to 60 millimeters.

7. Apparatus according to claim 1 in which each lateral condenser has an electrode extending along the path for a distance from 9 to 18 millimeters.

8. Apparatus according to claim 1 in which each lateral condenser has an electrode extending along the path for a distance of from 15 to 30 millimeters.

References Cited in the file of this patent

UNITED STATES PATENTS

2,219,497	Stevens et al.	Oct. 29, 1940
2,222,221	Burford	Nov. 19, 1940
2,542,372	Taylor et al.	Feb. 20, 1951
2,565,500	Ingham	Aug. 28, 1951
2,631,188	Clapp	Mar. 10, 1953
2,710,583	Fava	June 14, 1955
2,906,950	Ichijo	Sept. 29, 1959
2,948,850	Ederer	Aug. 9, 1960