Sept. 21, 1965 J. W. MOORE ETAL 3,207,317

HOLDER FOR AN ELECTRIC ERASER AND PENCILS

Filed Aug. 24, 1964

Fig. 1.

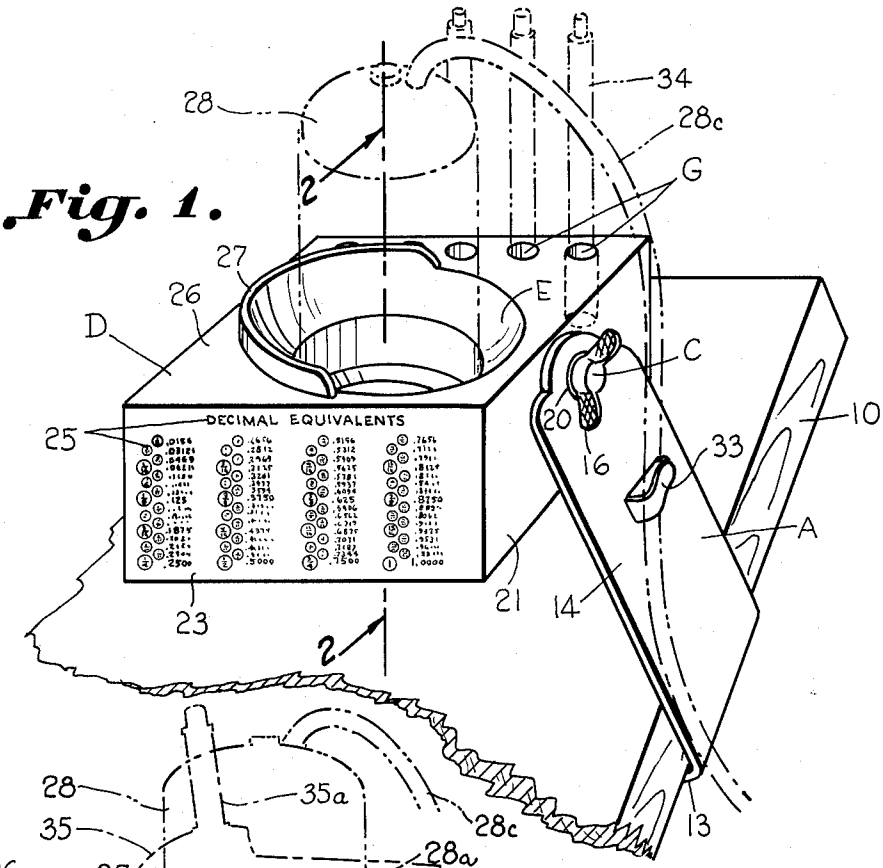

Fig. 2.

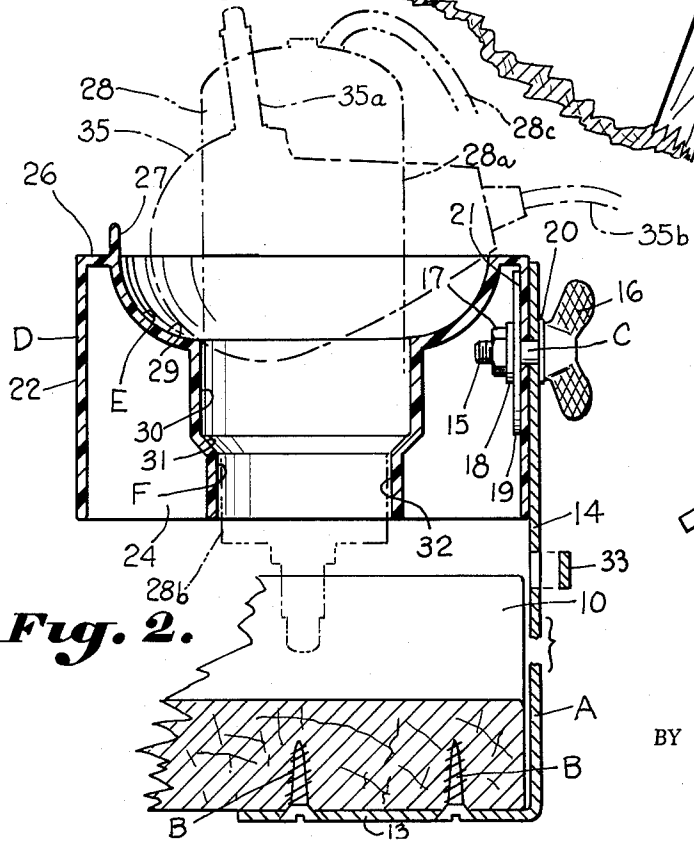

Fig. 3.

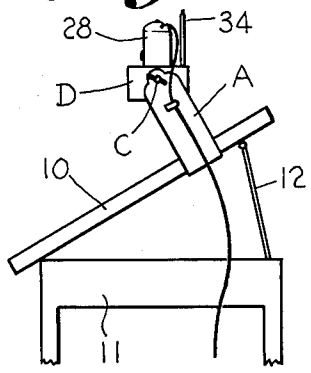

INVENTOR.
JAMES W. MOORE &
ROBERT L. CARROLL
BY
ATTORNEY

United States Patent Office 3,207,317 Patented Sept. 21, 1965

3,207,317

HOLDER FOR AN ELECTRIC ERASER AND PENCILS

James W. Moore, 113 Stephens Lane, and Robert L. Carroll, 408 McIver St., both of Greenville, S.C.

Filed Aug. 24, 1964, Ser. No. 391,581
2 Claims. (Cl. 211—13)

This invention relates to a holder for an electric eraser and pencils and the like for use by draftsmen to position the eraser and the pencils conveniently with respect to a drafting table.

The adjustable drafting table employed in modern drafting rooms often become cluttered with pencils and other drawing equipment. In the confusion the electric eraser often falls from the table to the floor resulting in the delicate mechanism thereof becoming damaged. This is so common an occurance as to be a substantial annoyance to draftsmen. Since the drafting surface or board may be adjusted by raising the back portion thereof so as to tilt the board downwardly from back to front, the possibility of the electric eraser falling and becoming damaged becomes greater. The draftsman's pencils also tend to fall to the floor and the points thereof are broken.

Accordingly, it is an important object of this invention to position an electric eraser with respect to the inclined surface of a drafting table to make it readily accessible for use and yet preclude the possibility of it falling to the floor and becoming damaged while positioning pencils closely adjacent thereto.

Another important object of the invention is the provision of means for positioning the electric eraser and pencils so as to be readily accessible since these are the two items which the draftsmen will be using together continuously in their work.

It is a further object of this invention to make the pencils and electric eraser readily available and position them out of the way of the other equipment which might be found on the drafting table to make them readily accessible for use through the use of a single holding device.

The construction designed to carry out the invention will be hereinafter described, together with other features thereof.

The invention will be more readily understood from a reading of the following specification and by reference to the accompanying drawing forming a part thereof, wherein an example of the invention is shown and wherein:

FIGURE 1 is a perspective view illustrating a holder for an electric eraser and pencils constructed in accordance with the present invention positioned upon a drafting table,

FIGURE 2 is an enlarged longitudinal sectional view taken on the line 2—2 in FIGURE 1, and

FIGURE 3 is a schematic side elevation, at a reduced scale, illustrating the positioning of the holder upon a drafting table.

The drawing illustrates a holder for an electric eraser and pencils and the like for use by draftsmen to position the eraser and the pencils conveniently with respect to a drafting table. A bracket A extends above the drafting table, and means B are provided for securing the bracket to the drafting table adjacent an edge thereof. A mounting element C includes an elongated externally threaded member having connection with said block-like member and with said bracket above the drafting table, and means carried by said threaded member for turning same to fix and to loosen the block-like member with respect to the bracket so that said block-like member may be adjusted with respect to the bracket for maintaining the block-like member in a substantially horizontal

position for all positions of the drafting table. A substantially horizontally disposed block-like member D of substantial thickness is carried by the mounting element. A first annular bowl-like surface E defines an enlarged opening or receptacle in the block-like member extending from the upper surface of the block-like member tapering inwardly toward an intermediate portion of the block-like member for receiving the body of an electric eraser. A second annular surface F joins the first annular surface in an intermediate portion of the block-like member and extends downwardly through the block-like member defining a reduced opening for receiving the barrel of an electric eraser. A plurality of spaced openings or receptacles G are provided for receiving pencils opening in the upper surface of the block-like member adjacent the eraser. Thus, the block-like member D serves to carry the openings E and F for the eraser as well as the openings for the pencils and the like.

The bracket A is illustrated as being secured adjacent the edge of a drafting table or board **10**. The drafting table or board is illustrated as being secured to a base **11** and support means **12** are illustrated for maintaining the table **10** in raised position. The bracket A includes a horizontally disposed member **13** which is secured by fastening means B in the form of screws adjacent a side edge of the drafting table **10**. The bracket A includes a flat upright or standard portion **14** which is secured to the flat base **13** integrally therewith. The standard **14** extends above the drafing table and carries a mounting element C for positioning the block-like member D.

The mounting element C includes an elongated externally threaded member **15** which has a wing nut portion **16** remote from the threaded shank portion thereof. The externally threaded member **15** has connection with the block-like member and with the bracket above the drafting table. Means for adjusting the threaded member includes the wing nut portion **16** carried thereby which makes possible the tightening of the mounting assembly. Also, included in the mounting assembly are a nut **17**, a lock washer **18**, and a metal washer **19**, together with a fiber washer **20**.

It will be noted that the block-like member D which is preferably constructed of plastic, although any other suitable material may be used, has a downwardly extending bracket portion **21** forming a side thereof, and that an opposite complementary side **22** is provided. The block-like member D has a front wall **23** and a rear wall **24**. It will be noted that it is convenient to position a table of decimal equivalents illustrated at **25** upon the front face of the wall **23**. The bracket or side portion **21** extends downwardly between the metal washer **19** and the fiber washer **20** to be securely positioned with respect to the standard **14**.

The block-like member D has a substantially horizontal upper surface member **26**. A first annular surface E extends downwardly and inwardly from the upper surface member **26** into an intermediate portion of the block-like member for receiving the body **28*a*** of the electric eraser illustrated in broken lines at **28**. It will be noted that a shield **27** is provided to facilitate the insertion of the electric eraser **28** in the bowl-like member E. A second annular surface F joins the first annular surface in an intermediate portion of the block-like member and extends downwardly through the block-like member defining a reduced opening for receiving the barrel portion **28*b*** of the electric eraser. It will be noted that the annular surface E includes a bowl-like portion **29** for receiving the body portion **28*a*** of the electric eraser **28**. The inwardly tapering surface of the member **29** joins a downwardly extending member as indicated at **30**. The surface F includes the downwardly and inwardly taper-

ing surface **31** which is joined by the downwardly extending member **32**. It will be noted that a struck-up clip portion **33** receives the cord **28***c* of the electric eraser and that the pencils, illustrated in broken lines at **34**, are received within spaced openings or receptacles G in the upper surface **26** of the block-like member adjacent the eraser. Another type of electric eraser in common use is illustrated in broken lines at **35** in FIGURE 2 positioned in the annular bowl-like portions E of the eraser holder of the present invention. The eraser carrying barrel **35***a* extends upward and the cord **35***b* may be positioned similarly to the cord, illustrated at **28***c*.

It will thus be observed that the holder of the present invention receives the major equipment of the draftsmen which he continually uses in his work. The triangles and various straight edges would then be the only equipment which would not be taken off of the drafting table and positively and properly positioned for ready access by the draftsmen.

While a preferred embodiment of the invention has been described using specific terms, such description is for illustrative purposes only, and it is to be understood that changes and variations may be made without departing from the spirit or scope of the following claims.

What is claimed is:

1. A holder for an electric eraser for use by draftsmen to position the eraser conveniently with respect to a drafting table including, a bracket extending above the drafting table, means securing the bracket to the drafting table adjacent an edge thereof, a substantially horizontally disposed block-like member of substantial thickness carried by the bracket, an elongated externally threaded member having connection with said block-like member and with said bracket above the drafting table, and means carried by said threaded member for turning same to fix and to loosen the block-like member with respect to the bracket so that said block-like member may be adjusted with respect to the bracket for maintaining the block-like member in a substantially horizontal position for all positions of the drafting table, and an annular surface defiining an enlarged opening in the block-like member extending from the upper surface of the block-like member tapering downwardly and inwardly for receiving the body of an electric eraser.

2. A holder for an electric eraser and pencils and the like for use by draftsmen to position the eraser and the pencils conveniently with respect to a drafting table including, a bracket extending above the drafting table, means securing the bracket to the drafting table adjacent an edge thereof, a substantially horizontally disposed block-like member of substantial thickness carried by the bracket, an elongated externally threaded member having connection with said block-like member and with said bracket above the drafting table, and means carried by said threaded member for turning same to fix and to loosen the block-like member with respect to the bracket so that said block-like member may be adjusted with respect to the bracket for maintaining the block-like member in a substantially horizontal position for all positions of the drafting table, a first annular surface defining an enlarged opening in the block-like member extending from the upper surface of the block-like member tapering downwardly and inwardly toward an intermediate portion of the block-like member for receiving the body of an electric eraser, a second annular surface joining said first annular surface in an intermediate portion of the block-like member and extending downwardly through the block-like member defining a reduced opening for receiving the barrel of an electric eraser, and a plurality of spaced openings for receiving pencils opening in the upper surface of the block-like member adjacent the eraser.

References Cited by the Examiner

UNITED STATES PATENTS

1,910,091	5/33	Collier	248—288
2,471,825	5/49	Long	248—312
2,683,640	7/54	Mangine	248—226
2,842,260	7/58	Molitor	206—17
2,912,205	11/59	Toune	248—210
3,000,571	9/61	Sconza	211—26

CLAUDE A. LE ROY, *Primary Examiner.*