(19) Europäisches Patentamt
European Patent Office
Office européen des brevets

(11) EP 2 196 745 B1

(12) **EUROPEAN PATENT SPECIFICATION**

(45) Date of publication and mention of the grant of the patent:
**08.11.2017 Bulletin 2017/45**

(21) Application number: **08855672.5**

(22) Date of filing: **20.11.2008**

(51) Int Cl.:
***F25B 9/00*** *(2006.01)* ***F25B 41/06*** *(2006.01)*

(86) International application number:
**PCT/JP2008/071069**

(87) International publication number:
**WO 2009/069524 (04.06.2009 Gazette 2009/23)**

(54) **REFRIGERATION CYCLE DEVICE**

KÜHLKREISLAUFVORRICHTUNG

DISPOSITIF DE CYCLE DE RÉFRIGÉRATION

(84) Designated Contracting States:
**AT BE BG CH CY CZ DE DK EE ES FI FR GB GR HR HU IE IS IT LI LT LU LV MC MT NL NO PL PT RO SE SI SK TR**

(30) Priority: **30.11.2007 JP 2007310097**

(43) Date of publication of application:
**16.06.2010 Bulletin 2010/24**

(60) Divisional application:
**13166592.9 / 2 647 925**
**13166593.7 / 2 647 926**
**13166595.2 / 2 647 927**
**13166596.0 / 2 647 928**

(73) Proprietor: **Mitsubishi Electric Corporation**
**Chiyoda-ku**
**Tokyo 100-8310 (JP)**

(72) Inventors:
- **OKAZAKI, Takashi**
  **Tokyo 100-8310 (JP)**
- **UNEZAKI, Fumitake**
  **Tokyo 100-8310 (JP)**
- **OOBAYASHI, Tomoyoshi**
  **Tokyo 100-8310 (JP)**

(74) Representative: **Pfenning, Meinig & Partner mbB**
**Patent- und Rechtsanwälte**
**Theresienhöhe 11a**
**80339 München (DE)**

(56) References cited:

| | |
|---|---|
| **WO-A1-2006/006578** | **JP-A- 2003 139 419** |
| **JP-A- 2003 176 957** | **JP-A- 2003 176 957** |
| **JP-A- 2004 061 061** | **JP-A- 2005 134 070** |
| **JP-A- 2005 156 030** | **JP-A- 2005 315 558** |
| **JP-A- 2005 315 558** | **JP-A- 2006 077 998** |
| **JP-A- 2006 153 349** | **JP-A- 2007 093 100** |
| **JP-A- 2007 093 100** | **JP-A- 2007 278 686** |
| **JP-B2- 3 227 651** | **JP-B2- 3 601 369** |
| **US-A1- 2003 061 827** | **US-A1- 2004 261 435** |

- **WHITE S D ET AL: "A HEAT PUMP FOR SIMULTANEOUS REFRIGERATION AND WATER HEATING", TRANSACTIONS OF THE INSTITUTION OF PROFESSIONAL ENGINEERS NEWZEALAND, ELECTRICAL/ MECHANICAL/ CHEMICAL ENGINEERING SECTION, INSTITUTION OF PROFESSIONAL ENGINEERS NEW ZEALAND, WELLINGTON, NZ, vol. 24, no. 1, 1 November 1997 (1997-11-01), pages 36-43, XP008041183, ISSN: 0111-946X**





Printed by Jouve, 75001 PARIS (FR)

## Description

Technical Field

**[0001]** The present invention relates to a refrigeration cycle apparatus using an internal heat exchanger, more particularly to a refrigerant control for stably securing performance.

Background Art

**[0002]** Descriptions will be given to prior art as follows.

**[0003]** Conventionally, a hot water supply apparatus is proposed as a built-in refrigeration cycle apparatus such as:

> a hot water supply apparatus comprising a refrigeration cycle including a compressor, a hot water supply heat exchanger, an electronic expansion valve, and a heat source side heat exchanger whose heat source is an external air, and a hot water supply cycle including a hot water supply heat exchanger and a hot water supply tank,
> wherein since ability control means that uses an ability-variable type compressor and ability-controls the compressor in response to changes in external environment conditions of the heat source side heat exchanger is attached, expansion valve opening degree control means for controlling an opening degree of an electronic expansion valve so as to make a discharge temperature of a compressor to be a target value in response to changes in external environment conditions (an external temperature, for example) of the heat source side heat exchanger and rotation speed control means for controlling a rotation speed of the compressor to be a target value in response to changes in the external environment conditions of the heat source side heat exchanger are attached, an opening of the electronic expansion valve is controlled so as to make the discharge temperature of the compressor becomes a target value in response to changes in the external environment conditions (an external temperature, for example) of the heat source side heat exchanger, and the rotation speed of the compressor is controlled to be a target value in response to changes in the external environment conditions of the heat source side heat exchanger, an optimal operation condition can be obtained in which a hot water supply ability and a hot water supply load further match, and a coefficient of performance (COP) can be improved and downsizing of elements such as an heat exchanger becomes possible. (For example, refer to Patent Document 1 or to US 2003/061827)

**[0004]** A water heater is also proposed such as:

> a water heater for heating a hot water supply fluid in a supercritical heat pump cycle where a refrigerant pressure in a high pressure side becomes equal to or more than the critical pressure of the refrigerant comprising:
> a compressor,
> a radiator that performs heat exchange between a refrigerant discharged from the compressor and a hot water supply fluid and is configured so that a refrigerant flow and the hot water supply fluid flow opposes,
> a decompressor for decompressing the refrigerant flowing out of the radiator, and
> an evaporator that makes the refrigerant that flows out of the compressor evaporate, makes the refrigerant absorb a heat to discharge it into a suction side of the compressor,
> wherein a refrigerant pressure of a high-pressure side is controlled so that a temperature difference ($\Delta T$) between the refrigerant that flows out of the radiator and the hot water supply fluid that flows therein becomes a predetermined temperature difference ($\Delta To$). (For example, refer to Patent Document 2) In this example of the prior art, a heat exchange efficiency of the radiator can be enhanced to improve efficiency of a heat pump.

**[0005]** [Patent Document 1] Japanese Patent Gazette No.3601369 (pp.6; Fig. 1)

**[0006]** Conventionally, as in patent document 1, there is a proposal that in the refrigerant cycle apparatus of supercritical vapor compression type, in which the refrigerant pressure at the high pressure side discharged from the refrigerant compressor becomes a critical pressure or larger, high pressure is controlled by changing the opening degree of the decompression valve so that a difference between the inlet temperature of the fluid to be heated and the outlet temperature of the refrigerant enters a predetermined range.

**[0007]** [Patent Document 2] Japanese Patent Gazette No.3227651 (pp.1 - 3; Fig. 2)

**[0008]** Conventionally, as in patent document 2, there is a proposal such that "a heat pump hot water supply apparatus comprising: a refrigeration cycle in which a compressor for compressing a refrigerant up to a supercritical pressure, a single radiator for exchanging heat between a refrigerant discharged from the compressor and a load side medium, an expansion valve for decompressing the refrigerant, and an evaporator are connected annularly and the refrigerant is circulated; a hot water supply circuit that store a load side medium heated by the refrigerant circulating in the single radiator; and high pressure control means for controlling a high pressure side refrigerant pressure at a predetermined pressure.

**[0009]** US 2003/0061827 A1 discloses a heat pump water heater. Said heater uses a supercritical refrigerant cycle, wherein a valve open degree of a decompression valve is controlled in order to control a pressure of high pressure side refrigerant so that a temperature difference

between refrigerant falling out from water refrigerant heat exchanger and water flown into a water flown into a water refrigerant heat exchanger is set in a predetermined temperature range. Thereby, the pressure of high pressure side refrigerant in the supercritical refrigerant cycle can be controlled and heat exchange performance of an internal heat exchanger can be suitably adjusted.

**[0010]** JP 2005/315558 A discloses a heat pump water heater. Said heater comprises a refrigerating cycle in which a compressor for compressing the refrigerant to supercritical pressure, a single radiator for heat exchange between the refrigerant discharged from the compressor and a load side medium, an expansion valve for reducing the pressure of the refrigerant and an evaporator are annularly connected to one another. Therein, the refrigerant is circulated while the high pressure side refrigerant pressure is controlled to preset pressure by a high pressure control means. This allows to control the refrigerant amount distribution in said refrigerating cycle.

Summary of Invention

Problems to be Solved by the Invention

**[0011]** Both of the above examples of the prior art control refrigerant conditions so that a discharge temperature of the compressor or a temperature difference (AT) between the refrigerant that flows out of the radiator and the hot water supply fluid that flows therein becomes a target value to achieve an efficient operation. However, there was a problem that in the vicinity where an efficiency (COP) of the refrigeration cycle becomes maximum, a control based only on an inlet side (the above discharge temperature) of the radiator or an outlet side (the above temperature difference AT) is difficult to achieve stable and efficient operation conditions because changes in the discharge temperature or the temperature difference $\Delta T$ are small. In addition, since an operation in which an internal heat exchanger exists in the refrigerant circuit is not considered, there was a problem that to control to achieve stable and efficient operation conditions is difficult.

There was a problem that in patent documents 1 and 2 shown above, each hot water supply apparatus incorporates a refrigeration cycle. In such a refrigeration cycle, changes in the inlet side temperature of the radiator or outlet side temperature of the radiator is small in the vicinity where efficiency (COP) becomes maximum, so that to control to achieve stable and efficient operation conditions is difficult.

**[0012]** The present invention is made to solve the above problems in the prior art. The object is to obtain a refrigeration cycle apparatus capable of stably achieving efficient operation conditions by controlling operation values based on standard conditions of the radiator and outlet conditions of the radiator to be a target value.

Means for Solving the Problems

**[0013]** In order to solve the above problems, the refrigeration cycle apparatus according to the present invention includes at least a compressor, a radiator, decompression means capable of changing an open degree, a heat absorber, an internal heat exchanger that performs heat exchange between a refrigerant at an outlet of the radiator and the refrigerant at the outlet of the heat absorber. The refrigeration cycle apparatus is characterized in that at least first refrigerant conditions detection means for detecting standard conditions of the radiator and second refrigerant conditions detection means for detecting refrigerant conditions between an outlet of the radiator and a high-pressure side inlet of an internal heat exchanger are provided, and an opening degree of decompression means is controlled so that a calculation value calculated based on an output of the first refrigerant conditions detection means and the output of the second refrigerant conditions detection means becomes a target value.

Effect of the Invention

**[0014]** According to the present invention, the expansion valve opening degree is controlled so that the COP becomes maximum based on standard conditions of the radiator and refrigerant conditions of the radiator outlet part, so that a refrigerant cycle apparatus capable of stably achieving efficient operation can be obtained.

Brief Description of Drawings

**[0015]**

[Fig. 1] Fig. 1 is a diagram showing a configuration of a refrigeration cycle apparatus according to Embodiment 1 of the present invention.

[Fig. 2] Fig. 2 is a diagram showing an operation behavior on a P-h diagram according to Embodiment 1 of the present invention.

[Fig. 3] Fig. 3 is a diagram showing a temperature distribution of a refrigerant and water in a water heat exchanger according to Embodiment 1 of the present invention.

[Fig. 4] Fig. 4 is a diagram showing cycle conditions against an expansion valve opening degree according to Embodiment 1 of the present invention.

[Fig. 5] Fig. 5 is a diagram showing changes in each calculation value, heating ability, and COP against an expansion valve opening degree according to Embodiment 1 of the present invention.

[Fig. 6] Fig. 6 is a diagram showing changes in other calculation value, heating ability, and COP against an expansion valve opening degree according to Embodiment 1 of the present invention.

[Fig. 7] Fig. 7 is a diagram showing a control flowchart according to Embodiment 1 of the present invention.

[Fig. 8] Fig. 8 is a diagram showing a refrigeration cycle apparatus according to Embodiment 2 of the present invention.

[Fig. 9] Fig. 9 is a diagram showing an operation behavior on a P-h diagram according to Embodiment 2 of the present invention.

Descriptions of Codes and Symbols

**[0016]**

1 compressor
2 radiator (water heat exchanger)
3 expansion valve
4. heat absorber (evaporator)
5 internal heat exchanger
20 hot water supply side pump
21 hot water storage tank
22 use side pump
23, 24, 25 on-off valve
29 blower
30, 31, 32, 33, 41, 42, 52 temperature detection means
35, 51 pressure detection means
40 controller
50 heat source apparatus
60 hot water storage apparatus

Best Mode for carrying Out the Invention

Embodiment 1

**[0017]** Descriptions will be given to a refrigerant cycle apparatus by Embodiment 1. according to the present invention.

**[0018]** Fig. 1 shows a configuration diagram of the refrigerant cycle apparatus according to the present embodiment. In the figure, the refrigerant cycle apparatus according to the present embodiment is a hot water supply apparatus using carbon dioxide (hereinafter, $CO_2$ as a refrigerant, composed of a heat source apparatus 50, a hot water storage apparatus 60, and a controller 40 for controlling these. The present embodiment shows an example of the hot water supply apparatus, however, it is not limited thereto. The apparatus may be an air conditioner. In the same way, the refrigerant is not limited to carbon dioxide but an HFC refrigerant may be used.

**[0019]** The heat source apparatus 50 is composed of a compressor 1 for compressing the refrigerant, a radiator 2 (hereinafter, referred to "water heat exchanger") for taking out heat of a high-temperature high-pressure refrigerant compressed in the compressor 1, an internal heat exchanger 5 for further cooling the refrigerant output from the water heat exchanger 2, a decompressor 3 (hereinafter, referred to "expansion valve") that decompresses the refrigerant and whose opening degree can be changed, an heat-absorber 4 (hereinafter, referred to "evaporator") for evaporating the refrigerant decompressed in the expansion valve 3, and an internal heat exchanger 5 for further heating the refrigerant flowed out of the evaporator 4. That is, the internal heat exchanger 5 is a heat exchanger that heat-exchanges the refrigerant at an outlet of the water heat exchanger 2 with the refrigerant at the outlet of the evaporator 4. A blower 29 is provided for sending air on an outer surface of the evaporator 4. There are also provided first temperature detection means 30 for detecting a discharge temperature of the compressor 1, second temperature detection means 31 for detecting an outlet temperature of the water heat exchanger 2, fifth temperature detection means 32 for detecting an inlet refrigerant temperature of the evaporator 4, and sixth temperature detection means 33 for detecting a suction temperature of the compressor 1. In addition, the first temperature detection means 30 and the second temperature detection means 31 correspond to a first refrigerant conditions detection means and second refrigerant conditions detection means respectively in an example of control in Fig. 7 to be described later.

**[0020]** A hot water storage apparatus 60 is connected with the water heat exchanger 2, which is a radiator, via piping, being composed of a heat source side pump 20, a hot water storage tank 21, a use side pump 22, and on-off valves 23, 24, 25. Here, on-off valves 23, 24, 25 may be a simple valve only for switching operation or an opening variable valve. When a water level of the hot water storage tank 21 drops, the on-off valves 24, 25 are closed, the on-off valve 23 is opened, and hot water storage operation is performed in which supplied water is heated up to a predetermined temperature. When a heat dissipation loss is large and the temperature in the hot water storage tank 21 decreases such as in winter, the on-off valves 23, 25 are closed, the on-off valve 24 is opened, and circulation heating operation is performed in which low-temperature hot water in the hot water storage tank 21 is re-boiled. At the time of using the hot water supply, the on-off valves 23, 24 are closed, the on-off valve 25 is opened, the use side pump 22 starts operation to transfer stored hot water to the use side. At an inlet side of the water heat exchanger 2, third temperature detection means 41 is attached for detecting an inlet temperature of a medium (water) to be heated. At an outlet side of the water heat exchanger 2, fourth temperature detection means 42 is attached for detecting the outlet temperature of the medium (water) to be heated.

**[0021]** A controller 40 performs calculation using detected values from first temperature detection means 30, second temperature detection means 31, fifth temperature detection means 32, sixth temperature detection means 33, third temperature detection means 41, and fourth temperature detection means 42 to control an opening degree of the expansion valve 3, a rotation speed of the compressor 1, and the rotation speed of the hot water supply side pump 20, respectively.

**[0022]** Fig. 2 is a P-h diagram describing cycle conditions during hot water storage operation in the refrigeration cycle apparatus shown in Fig. 1. In Fig. 2, solid lines

denote refrigerant conditions at a certain expansion valve opening degree and A, B, C, D, and E denote refrigerant conditions in the hot water storage operation. At the time of the hot water storage operation, a high-temperature high-pressure refrigerant (A) discharged from the compressor 1 flows into the water heat exchanger 2. In the water heat exchanger 2, the refrigerant heats supplied water while dissipating heat to water circulating the hot water storage circuit to decrease the own temperature. A refrigerant (B) flowed out of the water heat exchanger 2 dissipates heat in the internal heat exchanger 5 to further decrease (C) the temperature, being decompressed (D) by the expansion valve 3 to turn into a low-temperature low-pressure refrigerant. The low-temperature low-pressure refrigerant absorbs heat from the air in the evaporator 4 to evaporate (E). The refrigerant flowed out of the evaporator 4 is heated in the internal heat exchanger 5 to turn into a gas (F) and sucked by the compressor 1 to form a refrigeration cycle.

**[0023]** Here, the expansion valve 3 is controlled so that a suction superheat degree of the compressor 1 becomes a target value (for example, 5 to 10°C). Specifically, based on a detection value of fifth temperature detection means 32 detecting an inlet refrigerant temperature of the evaporator 4, a temperature decrease amount due to a pressure loss in the evaporator 4 and the internal heat exchanger 5 is corrected, an evaporation temperature (ET) is estimated, a suction superheat degree $SH_s$ is calculated by the following formula using a detection value ($T_s$) of sixth temperature detection means 33 detecting a suction temperature of the compressor 1.

$$SH_S = T_S - ET$$

**[0024]** Using the above formula, an opening degree of the expansion valve 3 is controlled so that $SH_s$ becomes a target value. An example is given in which an evaporation temperature (ET) is estimated based on the detection value of the fifth temperature detection means 32, however, it is not limited thereto. Pressure detection means (second pressure detection means) 51 (refer to Fig. 1) is installed between a low-pressure side outlet of the internal heat exchanger 5 and the inlet of the compressor 1, and from the detection value, a refrigerant saturation temperature may be obtained. A suction superheat degree control precedes other high efficiency operation control because a function to prevent liquid return of the compressor 1 precedes a function to efficiently operate the water heat exchanger 2 from the viewpoint of securing reliability of the equipment.

**[0025]** Next, operation on the P-h diagram in the case when the opening degree of the expansion valve 3 is made smaller is denoted by broken lines in Fig. 2. When the opening degree of expansion valve 3 is made smaller, the refrigerant flow amount flowing from the expansion valve 3 to the evaporator 4 decreases and the suction superheat degree of the compressor 1 temporarily increases. In addition, since the refrigerant shifts to a high pressure side, the pressure on the high pressure side increases and a discharge temperature becomes high. At the same time, a water heat exchanger output temperature decreases so that a temperature difference in the becomes constant. When the water heat exchanger output temperature decreases, a heat exchange amount in the internal heat exchanger 5 decreases, and as a result, the suction superheat degree becomes almost the same state as that of before the opening degree of the expansion valve 3 is made smaller to indicate a constant value. That is, a change in opening degree of the expansion valve 3 is absorbed by the heat exchange amount of the internal heat exchanger 5 (the heat exchange amount varies in response to the opening degree of the expansion valve 3) to make a change in the suction superheat degree small. Accordingly, control of the suction superheat degree of the compressor 1 alone cannot secure heating ability in the water heat exchanger 2 and efficiency is lowered. Therefore, new control is required in order to secure heating ability and improve operation efficiency.

**[0026]** Next, descriptions will be given to why a local maximal value occurs in performance (COP) using a temperature distribution in the water heat exchanger shown in Fig. 3.

**[0027]** Fig. 3 shows a refrigerant and water temperature distribution in the water heat exchanger 2. In the figure, thick solid lines show a change in refrigerant temperature, and a thin solid lines denote a change in water temperature. $\Delta T1$ denotes a temperature difference between the water heat exchanger inlet temperature and water outlet temperature, and $\Delta T2$ denotes a temperature difference between the water heat exchanger outlet temperature and water inlet temperature. $\Delta$ Tp is a temperature difference at a pinch point where the temperature difference between a refrigerant and water in the water heat exchanger 2 becomes minimum. $\Delta T$ denotes a temperature difference between the water heat exchanger inlet temperature and the water heat exchanger outlet temperature. As shown by a cycle state against the expansion valve opening degree in Fig. 4, when a discharge temperature is increased by decreasing the expansion valve 3 opening degree, under a condition when heating ability in the water heat exchanger 2 is almost constant, the outlet temperature of the water heat exchanger 2 decreases so that an average temperature difference of the refrigerant and water in the water heat exchanger 2 is maintained, and the temperature difference $\Delta$ Tp of pinch point also decreases. Further, as the refrigerant amount shifts to a high pressure side, a discharge pressure rises to increase an input and COP is lowered. To the contrary, when the expansion valve 3 opening degree is made large and the discharge temperature is lowered, the outlet temperature of the water heat exchanger 2 increases so that an average temperature difference between the refrigerant and water in the

water heat exchanger 2 is maintained. The temperature difference ΔTp at the pinch point also increases, however, a heating ability ratio becomes small and COP is lowered. Accordingly, as shown by broken lines in the figure, a suitable expansion opening degree exists that makes COP maximum.

**[0028]** Next, Fig. 5 shows changes in operation values obtained from the temperature of each part when the opening degree of the expansion valve 3 changes. In Fig. 5, the horizontal axis represents the opening degree (%) of the expansion valve 3, and the vertical axis represents the suction superheat degree, discharge temperature, temperature difference ΔT2 between the outlet temperature of the water heat exchanger and water inlet temperature, heating ability ratio, COP ratio. The heating ability ratio and COP ratio show a ratio when a maximum value against the expansion valve opening degree is set as 100%, respectively. Against changes in the opening degree of the expansion valve 3, changes in the suction superheat degree can be regarded as almost a constant value, so that it is understood that changes in the heating ability ratio and the COP ratio cannot be judged by the suction superheat degree. When controlling the COP to be maximum based on the temperature difference ΔT2 between the discharge temperature and the outlet temperature of the water heat exchanger and water inlet temperature, changes in the discharge temperature and temperature difference ΔT2 are small in the vicinity of the expansion valve opening degree when the COP reaches maximum as shown by a dotted line in the figure, so that it is found that a high accuracy temperature measurement is required for controlling COP to be maximum.

**[0029]** Next, Fig. 6 shows changes in other operation values obtained from temperatures of each part when the opening degree of the expansion valve 3 is changed. In Fig. 6, the horizontal axis represents the opening degree (%) of the expansion valve 3. The vertical axis represents an outlet/inlet temperature difference ΔThx of the internal heat exchanger, a temperature difference ΔT between a discharge temperature and an outlet temperature of the water heat exchanger, a total temperature difference ∑ΔT of the above ΔT1 and ΔT2, heating ability, and a COP ratio, respectively. Characteristics of Fig. 6 shows that operation can be performed in the vicinity where the COP becomes maximum by either controlling a heat exchange amount of the internal heat exchanger 5 based on the temperature difference ΔThx between the outlet and inlet of the internal heat exchanger or controlling the heat exchange amount of the water heat exchanger 2 based on the total temperature difference ∑ΔT of ΔT1 and ΔT2 of the water heat exchanger 2. Further, the temperature difference ΔT between the discharge temperature and the outlet temperature of the water heat exchanger significantly changes in the vicinity of the expansion valve opening degree at which the COP becomes maximum, so that it is understood that a deviation from the maximum value of the COP could be controlled to be small based on the temperature difference Δ T. Here, only the case of the temperature difference ΔT is shown, however, the same effect can be expected by controlling based on the difference (ΔT1 -ΔT2) of the temperature differences ΔT1 and ΔT2.

**[0030]** Thus, it is possible to achieve an operation in the vicinity of the maximum efficiency by adopting a high-pressure side outlet temperature of the internal heat exchanger 5 for ΔThx, the discharge temperature for ΔT, and the discharge temperature and a water side outlet/inlet temperatures for ∑ΔT.

**[0031]** As is understood from Fig. 6, a total temperature difference ∑ΔT of the temperature difference ΔT1 between the water heat exchanger inlet temperature and water outlet temperature and the temperature difference ΔT2 between the water heat exchanger outlet temperature and water inlet temperature becomes a minimum. The control based on such an index has a physical meaning and being reasonable. However, high-precision temperature detection is required because change in temperature is small in the vicinity where the COP becomes a maximum compared with the temperature difference Δ T. Further, from Fig. 3, it is considered that when the COP becomes a maximum value, a temperature difference ΔTp at a pinch point is almost the same as that of ΔT2 between the water heat exchanger outlet temperature and water inlet temperature. This is because a maximum performance is shown when two temperature differences that become minimum in the water heat exchanger 2 become equal without being biased to either of them when considering characteristics of the heat exchanger. Accordingly, it is allowable to control the expansion valve 3 so as to make ΔTp and ΔT2 to be equal.

**[0032]** Next, descriptions will be given to an example of a control operation of the refrigeration cycle apparatus of Fig. 1 in which an expansion valve opening degree is controlled so as to make a suction superheat degree and the above temperature difference ΔT to converge at target values.

**[0033]** Fig. 7 is a flowchart showing a control operation of the refrigeration cycle apparatus. With the present invention, for the purpose of giving a priority to reliability of products, the suction superheat degree (SHs) control of the compressor 1 precedes the temperature difference ΔT control for securing the heating ability.

**[0034]** Firstly, when the suction superheat degree (SHs) is smaller than a target value (SHm) by a preset convergence range ΔSH or less (S101), the expansion valve opening degree is lowered until the suction superheat degree (SHs) converges. Thus, when the suction superheat degree (SHs) is secured, the temperature difference ΔT is made to converge at the target value. Specifically, when the temperature difference ΔT is smaller than a target value (ΔTm) by a preset convergence range δT or less (S102), the expansion opening degree is lowered and ΔT is made to converge. Thus, lower limit values of the suction superheat degree (SHs) and the temperature difference ΔT can be suppressed.

**[0035]** Next, when the suction superheat degree (SHs)

is larger than the target value (SHm) by a preset convergence range Δ SH or more (S103), the expansion valve opening degree is increased until the suction superheat degree (SHs) converges. Thus, when the suction superheat degree (SHs) is converged, the temperature difference ΔT is made to converge at the target value. Thus, when the suction superheat degree (SHs) is converged, the temperature difference ΔT is made to converge at the target value. Specifically, when the temperature difference ΔT is larger than the target value ΔTm) by a preset convergence range δT or more (S104), the expansion opening degree is increased and ΔT is made to converge. Thus, upper limit values of the suction superheat degree (SHs) and the temperature difference ΔT can be suppressed. An example is shown in which a priority is given to control the suction superheat degree, however, it is not limited thereto when using a compressor which is resistant to liquid return. The same effect can be expected even when the priority order is exchanged. Through the above control, the suction superheat degree (SHs) and the temperature difference ΔT are converged at target values.

**[0036]** In the above, descriptions are given to an example in which the suction superheat degree (SHs) and the temperature difference ΔT are controlled to converge at target values (SHm, ΔTm), however, it is allowable that, in place of the temperature difference ΔT, a total temperature difference ∑ ΔT of ΔT1 and ΔT2, a difference between ΔT1 and ΔT2 (ΔT1 - ΔT2), or ΔThx can be used to control them to converge at a target value, respectively. When using ∑ΔT and (ΔT1 - Δ T2), they are obtained by calculating detection temperatures by the first temperature detection means 30, the second temperature detection means 31, the third temperature detection means 41, and the fourth temperature detection means 42. When using Δ Thx, internal heat exchanger outlet temperature detection means 52 is attached (refer to Fig. 1) between a high-pressure side outlet of the internal heat exchanger 5 and an inlet of the expansion valve 3, the temperature difference ΔThx is obtained from a detection temperatures by the second temperature detection means 31 and the internal heat exchanger outlet temperature detection means 52.

**[0037]** Since, in the present embodiment, in addition to suction superheat degree control of the compressor, the expansion valve opening degree is made to be controlled so that the COP becomes maximum based on a temperature difference ΔT (or ∑ ΔT, ΔT1 - ΔT2, ΔThx) between the discharge temperature and the water heat exchanger outlet temperature, a high efficiency refrigeration cycle apparatus can be obtained.

**[0038]** A refrigerant saturation temperature (ET) is obtained based on an output of the fifth temperature detection means 32 or pressure detection means, the suction superheat degree (SHs) is obtained by the detection temperature (Ts) of the sixty temperature detection means and the refrigerant saturation temperature (ET), and the expansion valve opening degree is controlled so that the suction superheat degree (SHs) becomes a target value, so that the superheat degree of the suction part of the compressor 1 is secured , liquid return to the compressor 1 can be prevented, and reliability can be secured. In the example of Fig. 1, descriptions are given to an example in which the fifth temperature detection means 32 is provided between the expansion valve 3 and the evaporator 4, it can be disposed at any position between the inlet of the evaporator 4 and a low-pressure side inlet of the internal heat exchanger 5.

**[0039]** In the present embodiment, when controlling the superheat degree and the above temperature differences (ΔT, ∑ΔT, ΔT1 - ΔT2, ΔThx), the control of the superheat degree precedes the control of the above temperature differences. From this point, the reliability of the compressor 1 is secured.

**[0040]** In the present embodiment, the radiator is composed of the water heat exchanger, so that a high efficiency hot water supply apparatus can be obtained.

Embodiment 2

**[0041]** Descriptions will be given to a refrigeration cycle apparatus according to Embodiment 2 of the present invention as follows.

**[0042]** Fig. 8 is a drawing showing a configuration of the refrigeration cycle apparatus according to the present invention. What is different from Embodiment 1 is that a first pressure detection means 35 is provided in place of the first temperature detection means 30 for detecting the discharge temperature of the compressor 1. Based on the first pressure detection means 35, a virtual saturation temperature is obtained, which is a standard condition of the water heat exchanger 2. The pressure detection means 35 can be shared with a pressure sensor provided, for example, to prevent an abnormal rise in high pressure. Descriptions on an operation behavior will be omitted because they are the same as Embodiment 1.

**[0043]** In the present embodiment, like a conventional HFC refrigerant, a virtual superheat degree of the water heat exchanger 2 outlet is calculated to control the refrigerant conditions thereof. Specifically, from first pressure detection means 35 provided in place of the first temperature detection means 30, a virtual saturation temperature is calculated as a standard condition of the water heat exchanger 2 and from the difference between a virtual saturation temperature Tsat and outlet temperature Tcount of the water heat exchanger 2 detected by the second temperature detection means 31, a virtual superheat degree SC is obtained from the following formula.

$$SC = Tsat - Tcount$$

**[0044]** In the present embodiment, the opening degree of the expansion valve 3 is controlled in the same way as the flowchart of Fig. 7 so that the SC obtained by the

above formula becomes a target value (SCm) whose efficiency is maximum.

**[0045]** Here, how to obtain the virtual saturation temperature will be explained.

**[0046]** Fig. 9 is a diagram showing an operation behavior of the refrigeration cycle apparatus according to the present invention on a P-h diagram. The virtual saturation temperature can be freely defined by demonstrating a definition such as a pseudo critical temperature trajectory connecting flexion points of isothermal lines like a dashed line $\alpha$ and a vertical line like a dotted line $\beta$ extended with an enthalpy at a critical point being a constant. However, in order to operate the refrigeration cycle apparatus stably and at the maximum efficiency, a virtual saturation temperature should be selected under which the temperature difference becomes large in the vicinity of the maximum efficiency as mentioned above. Then, the virtual saturation temperature can be obtained as an intersection of a constant pressure line with a pressure at a point B, which is a detection value by first pressure detection means 35 and the dashed line $\alpha$, or as an intersection of a constant pressure line with a pressure at a point B, which is a detection value by first pressure detection means 35 and the dotted line $\beta$.

**[0047]** In the present embodiment, since the virtual saturation temperature is used in place of the discharge temperature of the compressor 1, first temperature detection means 30 in Fig. 1 can be omitted and low cost can be achieved. Like the conventional HFC refrigerant, superheat degree of the outlet of the water heat exchanger 2 is controlled, therefore, control of the expansion valve can be applied as it is, which has been conventionally used.

## Claims

**1.** A refrigerant cycle apparatus comprising:

at least a compressor (1), a radiator (2), decompression means (3) capable of changing an open degree, a heat absorber (4), an internal heat exchanger (5) that performs heat exchange between a refrigerant at an outlet of said radiator (2) and the refrigerant at an outlet of said heat absorber (4), wherein
first temperature detection means (30) for detecting a refrigerant temperature between an outlet of said compressor (1) and an inlet of said radiator (2) and second temperature detection means (31) for detecting the refrigerant temperature between the outlet of said radiator (2) and a high-pressure side inlet of said internal heat exchanger (5), third temperature detection means (41) for detecting an inlet temperature of a medium to be heated and fourth temperature detection means (42) for detecting the outlet temperature of the medium to be heated are provided, **characterized in that**
an opening degree of said decompression means (3) is controlled such that a sum ($\sum\Delta T$) of a temperature difference ($\Delta T1$) between a detection temperature by said first temperature detection means (30) and the detection temperature by said fourth temperature detection means (42) and the temperature difference ($\Delta T2$) between the detection temperature by said second temperature detection means (31) and the detection temperature by said third temperature detection means (41) becomes a target value.

**2.** The refrigerant cycle apparatus of claim 1, wherein

sixth temperature detection means (33) for detecting the refrigerant temperature between a low-pressure side outlet of said internal heat exchanger (5) and an inlet of said compressor (1) is provided,
superheat degree of a compressor suction part is calculated from a refrigerant saturation temperature at a detection point of said sixth temperature detection means (33) and a detection temperature by said sixth temperature detection means (33), and
the opening degree of said decompression means (3) is controlled such that said superheat degree becomes the target value.

**3.** The refrigerant cycle apparatus of claim 2, wherein

second pressure detection means (51) is provided between the low-pressure side outlet of said internal heat exchanger (5) and the inlet of said compressor (1) and
said refrigerant saturation temperature is calculated based on a detection value of said second pressure detection means (51).

**4.** The refrigerant cycle apparatus of claim 2, wherein

fifth temperature detection means (32) is provided between the inlet of said heat absorber (4) and the low-pressure side inlet of said internal heat exchanger (5) and
said refrigerant saturation temperature is calculated based on the detection temperature of said fifth temperature detection means (32).

**5.** The refrigerant cycle apparatus of any one of claims 2 to 4, wherein
a priority is given to control said superheat degree over said temperature difference.

**6.** The refrigerant cycle apparatus of any one of claims 1 to 5, wherein
said radiator (2) is a heat exchanger that exchanges

heat with water.

7. The refrigerant cycle apparatus of any one of claims 1 to 6, wherein carbon dioxide is used as a refrigerant.

**Patentansprüche**

1. Kühlmittelkreislaufvorrichtung, umfassend:

   wenigstens einen Kompressor (1), einen Radiator (2), Dekompressionsmittel (3), die in der Lage sind, einen Öffnungsgrad zu ändern, einen Wärmeabsorber (4), einen internen Wärmetauscher (5), der Wärmetausch zwischen einem Kühlmittel an einem Auslass von besagtem Radiator (2) und dem Kühlmittel an einem Auslass von besagtem Wärmeabsorber (4) durchführt, wobei
   erste Temperaturerfassungsmittel (30) zum Erfassen einer Kühlmitteltemperatur zwischen einem Auslass von besagtem Kompressor (1) und einem Einlass von besagtem Radiator (2), und zweite Temperaturerfassungsmittel (31) zum Erfassen der Kühlmitteltemperatur zwischen dem Auslass von besagtem Radiator (2) und einem hochdruckseitigen Einlass von besagtem internen Wärmetauscher (5), dritte Temperaturerfassungsmittel (41) zum Erfassen einer Einlasstemperatur eines zu erwärmenden Mediums und vierte Temperaturerfassungsmittel (42) zum Erfassen der Auslasstemperatur des zu erwärmenden Medium vorgesehen sind, **dadurch gekennzeichnet, dass**
   ein Öffnungsgrad von besagtem Dekompressionsmittel (3) so gesteuert wird, dass eine Summe ($\sum\Delta T$) einer Temperaturdifferenz ($\Delta T1$) zwischen einer Erfassungstemperatur von besagtem ersten Temperaturerfassungsmittel (30) und der Erfassungstemperatur von besagtem vierten Temperaturerfassungsmittel (42) und der Temperaturdifferenz ($\Delta T2$) zwischen der Erfassungstemperatur von besagtem zweiten Temperaturerfassungsmittel (31) und der Erfassungstemperatur von besagtem dritten Temperaturerfassungsmittel (41) ein Zielwert wird.

2. Kühlmittelkreislaufvorrichtung nach Anspruch 1, bei welcher
   sechste Temperaturerfassungsmittel (33) zum Erfassen der Kühlmitteitemperatur zwischen einem niederdruckseitigen Auslass des besagten internen Wärmetauschers (5) und einem Einlass des besagten Kompressors (1) vorgesehen sind,
   ein Überhitzungsgrad eines Kompressoransaugtrakts aus einer Kühlmittelsättigungstemperatur an einem Erfassungspunkt von besagtem sechsten Temperaturerfassungsmittel (33) und einer Erfassungstemperatur von besagtem sechsten Temperaturerfassungsmittel (33) berechnet wird, und
   der Öffnungsgrad von besagtem Dekompressionsmittel (3) so gesteuert wird, dass der besagte Überhitzungsgrad der Zielwert wird.

3. Kühlmittelkreislaufvorrichtung nach Anspruch 2, bei welcher
   zweite Druckerfassungsmittel (51) zwischen dem niederdruckseitigen Auslass des besagten internen Wärmetauschers (5) und dem Einlass des besagten Kompressors (1) vorgesehen sind, und
   besagte Kühlmittelsättigungstemperatur basierend auf einem Erfassungswert von besagtem zweiten Druckerfassungsmittel (51) berechnet wird.

4. Kühlmittelkreislaufvorrichtung nach Anspruch 2, bei welcher
   fünfte Temperaturerfassungsmittel (32) zwischen dem Einlass des besagten Wärmeabsorbers (4) und dem niederdruckseitigen Einlass des besagten internen Wärmetauschers (5) vorgesehen sind, und
   besagte Ktihlmittelsättigungsternperatur basierend auf der Erfassungstemperatur des besagten fünften Temperaturerkennungsmittels (32) berechnet wird.

5. Kühlmittelkreislaufvorrichtung nach einem der Ansprüche 2 bis 4, bei welcher
   eine Priorität der Steuerung des besagten Überhitzungsgrades über besagter Temperaturdifferenz gegeben wird.

6. Kühlmittelkreislaufvorrichtung nach einem der Ansprüche 2 bis 5, bei welcher besagter Radiator (2) ein Wärmetauscher ist, der mit Wasser Wärme tauscht.

7. Kühlmittelkreislaufvorrichtung nach einem der Ansprüche 2 bis 6, bei welcher Kohlendioxid als Kühlmittel verwendet wird.

**Revendications**

1. Appareil à circulation de fluide réfrigérant comprenant
   au moins un compresseur (1), un radiateur (2), un moyen de décompression (3) capable de modifier un degré d'ouverture, un absorbeur de chaleur (4), un échangeur thermique interne (5) qui effectue un échange thermique entre un fluide réfrigérant au niveau d'une sortie dudit radiateur (2) et le fluide réfrigérant au niveau d'une sortie dudit absorbeur de chaleur (4), dans lequel
   un premier moyen de détection de température (30) pour la détection d'une température de fluide réfrigérant entre une sortie dudit compresseur (1) et une

entrée dudit radiateur (2) et un deuxième moyen de détection de température (31) pour la détection de la température du fluide réfrigérant entre la sortie dudit radiateur (2) et une entrée côté haute pression dudit échangeur thermique interne (5), un troisième moyen de détection de température (41) pour la détection d'une température d'entrée d'un fluide à chauffer et un quatrième moyen de détection de température (42) pour la détection de la température de sortie du fluide à chauffer étant prévus,
**caractérisé en ce que**
un degré d'ouverture dudit moyen de décompression (3) est contrôlé de façon à ce qu'une somme ($\sum\Delta T$) d'une différence de température ($\Delta T1$) entre une température détectée par ledit premier moyen de détection de température (30) et la température détectée par ledit quatrième moyen de détection de température (42) et la différence de température ($\Delta T2$) entre la température détectée par ledit deuxième moyen de détection de température (31) et la température détectée par ledit troisième moyen de détection de température (41) devienne une valeur cible,

**2.** Appareil à circulation de fluide réfrigérant selon la revendication 1, dans lequel
un sixième moyen de détection de température (33) pour la détection de la température du fluide réfrigérant entre une sortie côté basse pression de l'échangeur thermique interne (5) et une entrée dudit compresseur (1) est prévu,
un degré de surchauffe d'un élément d'aspiration du compresseur est calculé à partir d'une température de saturation de fluide réfrigérant au niveau d'un point de détection dudit sixième moyen de détection de température (33) et une température détectée par ledit sixième moyen de détection de température (33), et
le degré d'ouverture dudit moyen de décompression (3) est contrôlé de façon à ce que ledit degré de surchauffe devienne la valeur cible.

**3.** Appareil à circulation de fluide réfrigérant selon la revendication 2, dans lequel
un deuxième moyen de détection de pression (51) est prévu entre la sortie côté basse pression dudit échangeur thermique interne (5) et l'entrée dudit compresseur (1) et
ladite température de saturation de fluide réfrigérant est calculée sur la base d'une valeur détectée par ledit deuxième moyen de détection de pression (51).

**4.** Appareil à circulation de fluide réfrigérant selon la revendication 2, dans lequel
un cinquième moyen de détection de température (32) est prévu entre l'entrée dudit absorbeur de chaleur (4) et l'entrée côté basse pression dudit échangeur thermique interne (5) et
ladite température de saturation de fluide réfrigérant est calculée sur la base de la température détectée par ledit cinquième moyen de détection de température (32).

**5.** Appareil à circulation de fluide réfrigérant selon l'une des revendications 2 à 4, dans lequel
la priorité est donnée au contrôle dudit degré de surchauffe sur ladite différence de température.

**6.** Appareil à circulation de fluide réfrigérant selon l'une des revendications 1 à 5, dans lequel
ledit radiateur (2) est un échangeur thermique qui échange de la chaleur avec de l'eau.

**7.** Appareil à circulation de fluide réfrigérant selon l'une des revendications 1 à 6, dans lequel du dioxyde de carbone est utilisé en tant que fluide réfrigérant.

FIG. 1

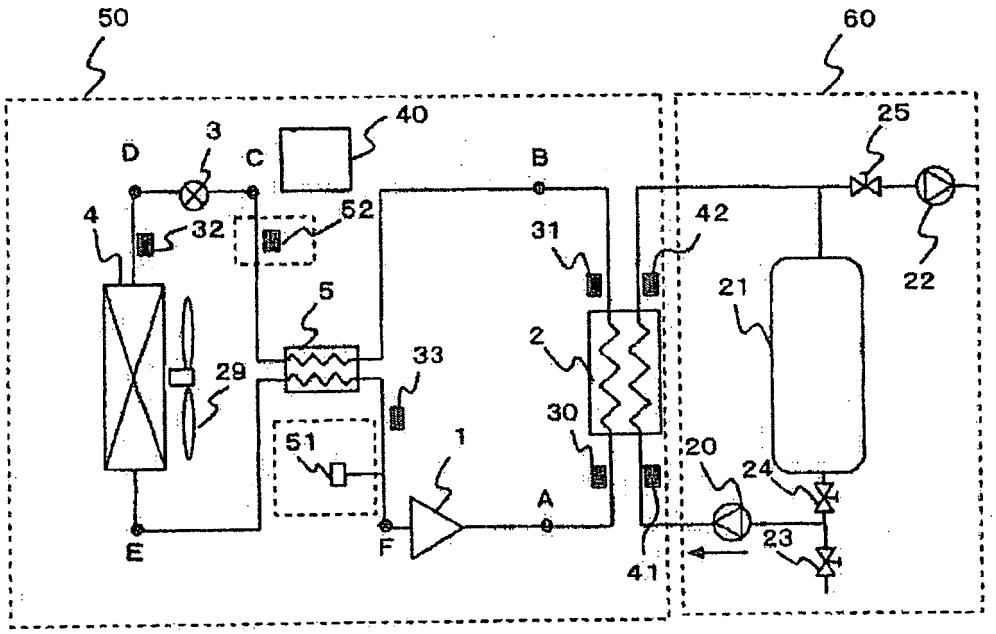
50
60
40
3
D
C
B
25
4
32
52
31
42
22
21
5
2
33
29
30
51
1
20
24
A
E
F
23
41

FIG. 2

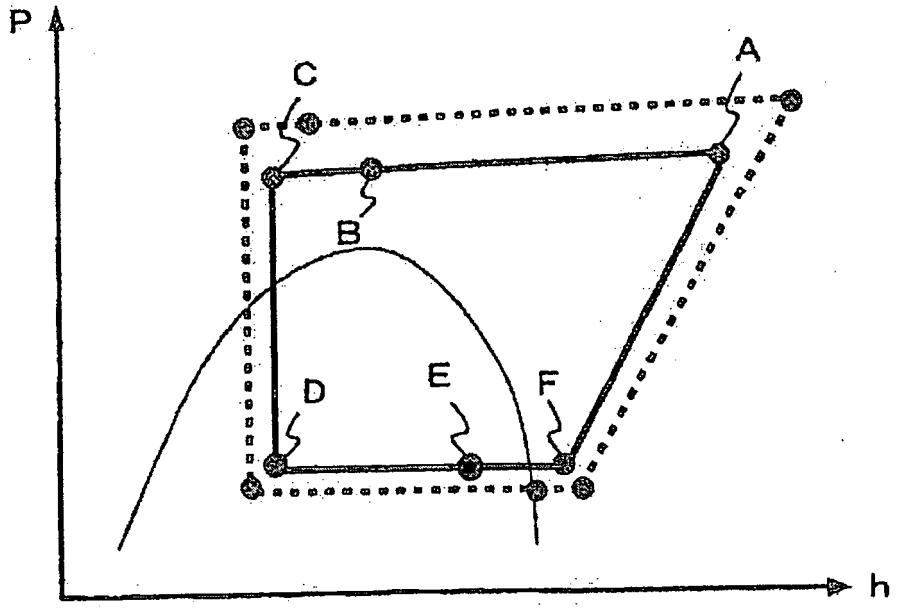
P
C
A
B
D
E
F
h

F I G. 3

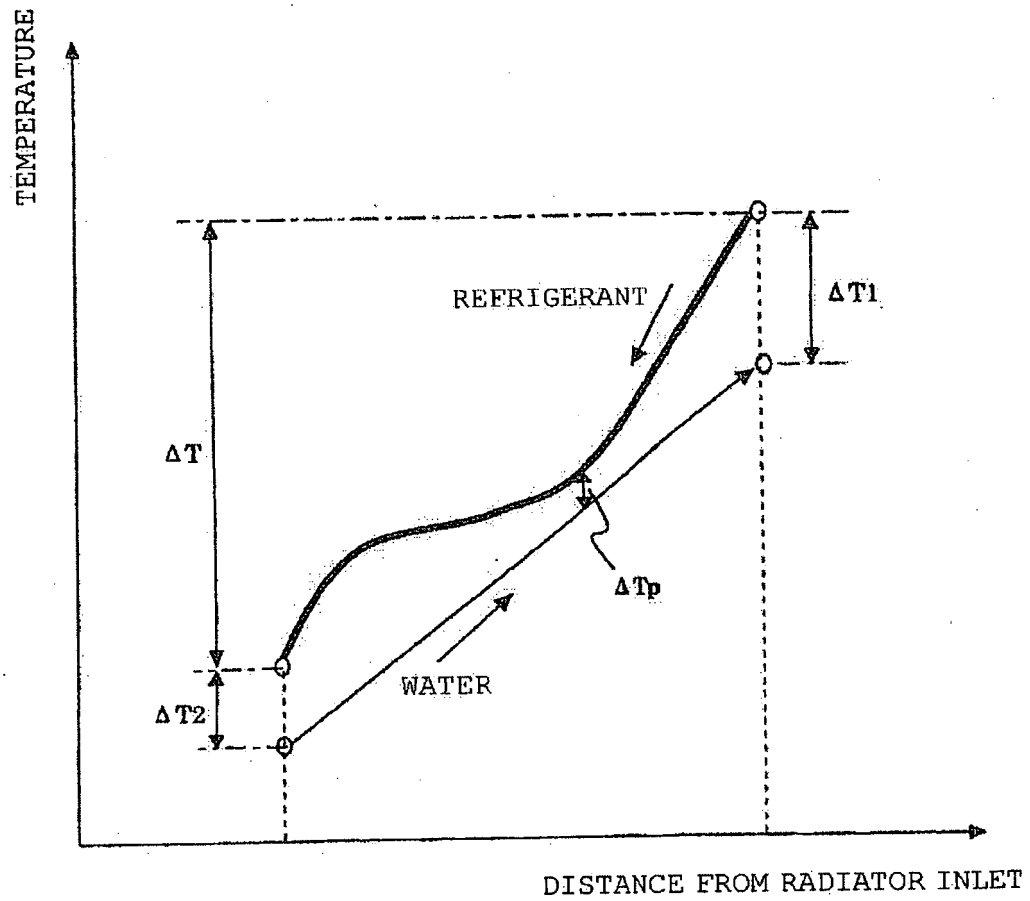
TEMPERATURE
REFRIGERANT
ΔT1
ΔT
ΔTp
WATER
ΔT2
DISTANCE FROM RADIATOR INLET

FIG. 4

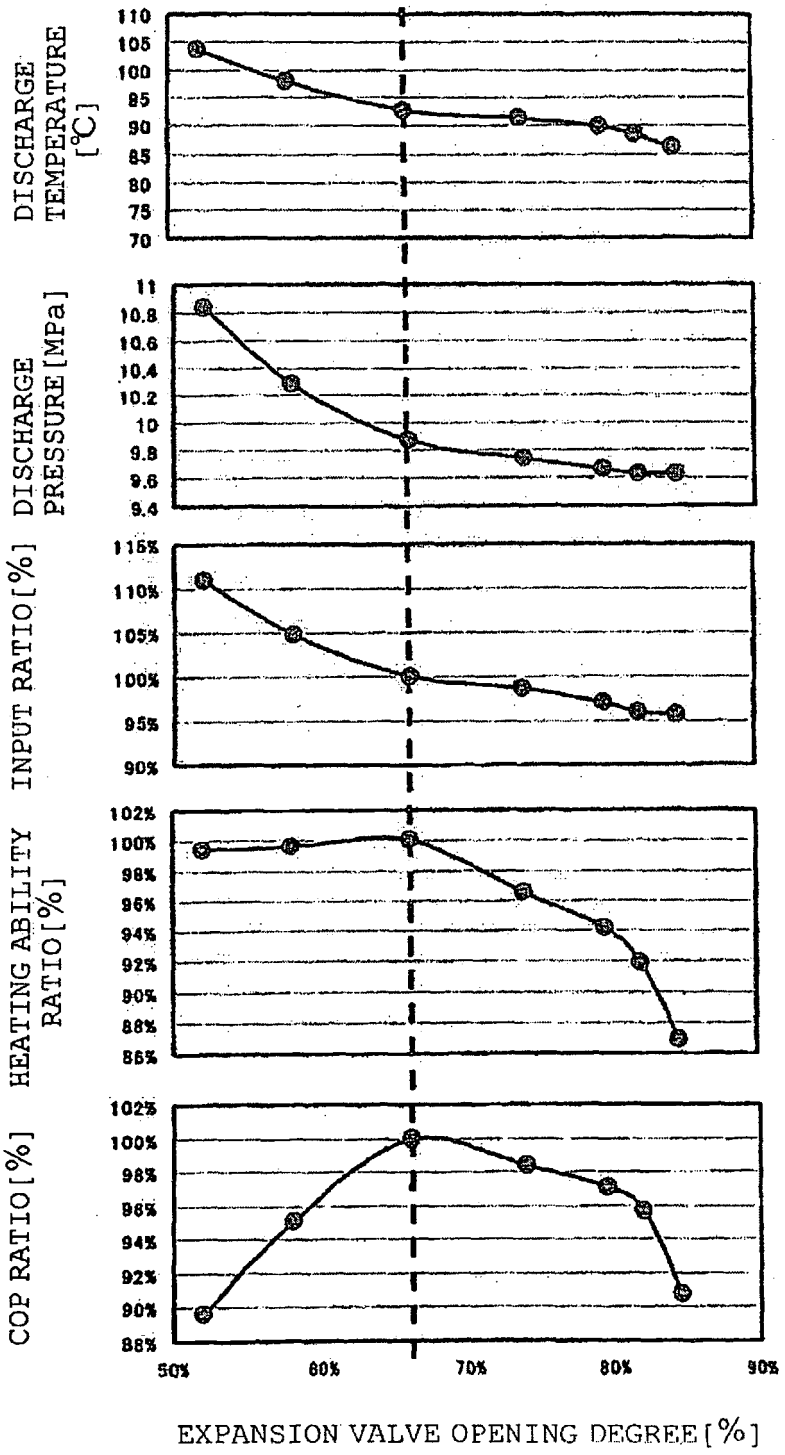
DISCHARGE TEMPERATURE [°C]
110
105
100
95
90
85
80
75
70
DISCHARGE PRESSURE [MPa]
11
10.8
10.6
10.4
10.2
10
9.8
9.6
9.4
INPUT RATIO [%]
115%
110%
105%
100%
95%
90%
HEATING ABILITY RATIO [%]
102%
100%
98%
96%
94%
92%
90%
88%
86%
COP RATIO [%]
102%
100%
98%
96%
94%
92%
90%
88%
50%
60%
70%
80%
90%
EXPANSION VALVE OPENING DEGREE [%]

F I G. 5

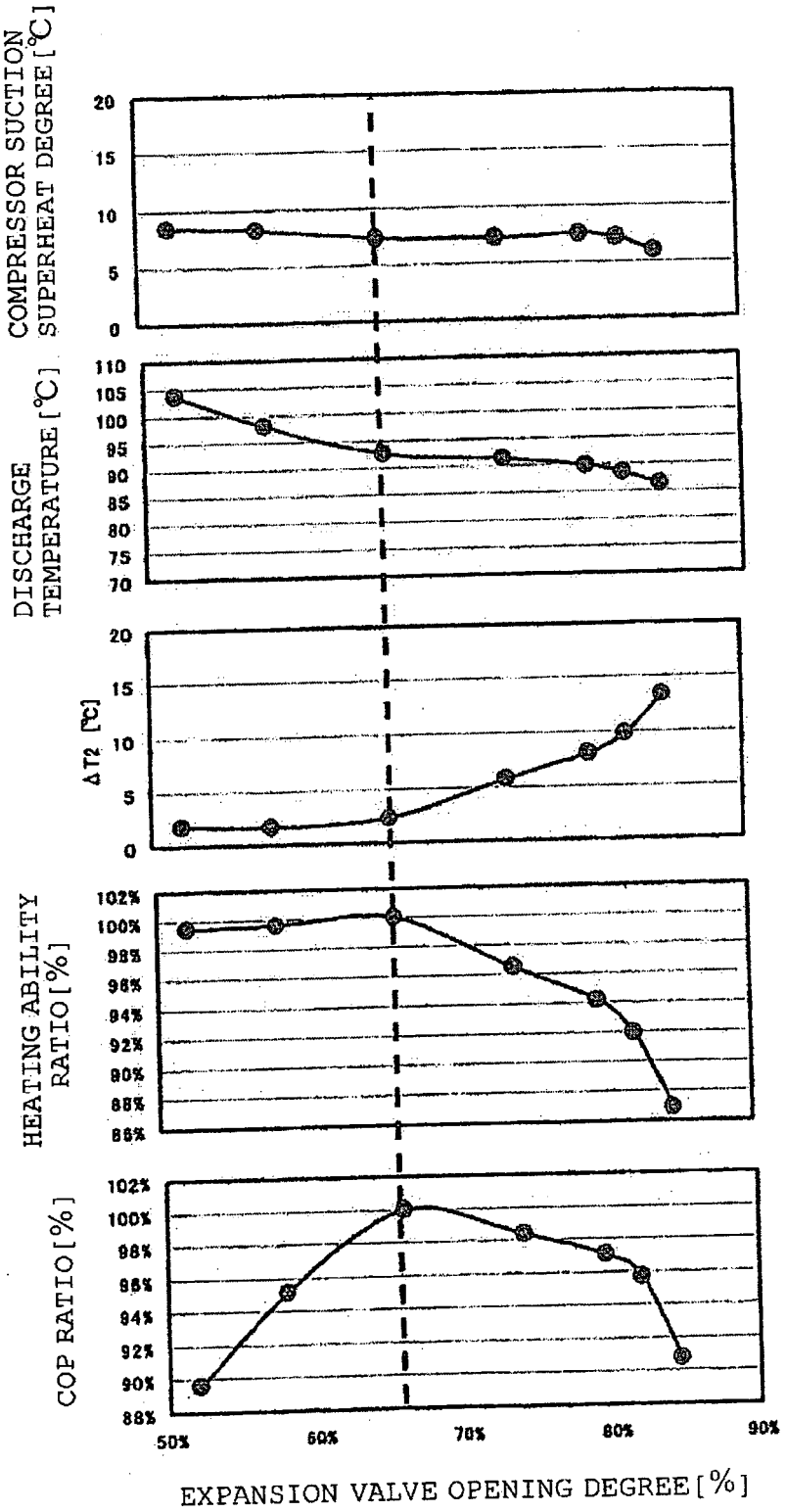
COMPRESSOR SUCTION SUPERHEAT DEGREE [℃]
20
15
10
5
0
DISCHARGE TEMPERATURE [℃]
110
105
100
95
90
85
80
75
70
ΔT2 [℃]
20
15
10
5
0
HEATING ABILITY RATIO [%]
102%
100%
98%
96%
94%
92%
90%
88%
86%
COP RATIO [%]
102%
100%
98%
96%
94%
92%
90%
88%
50%
60%
70%
80%
90%
EXPANSION VALVE OPENING DEGREE [%]

FIG. 6

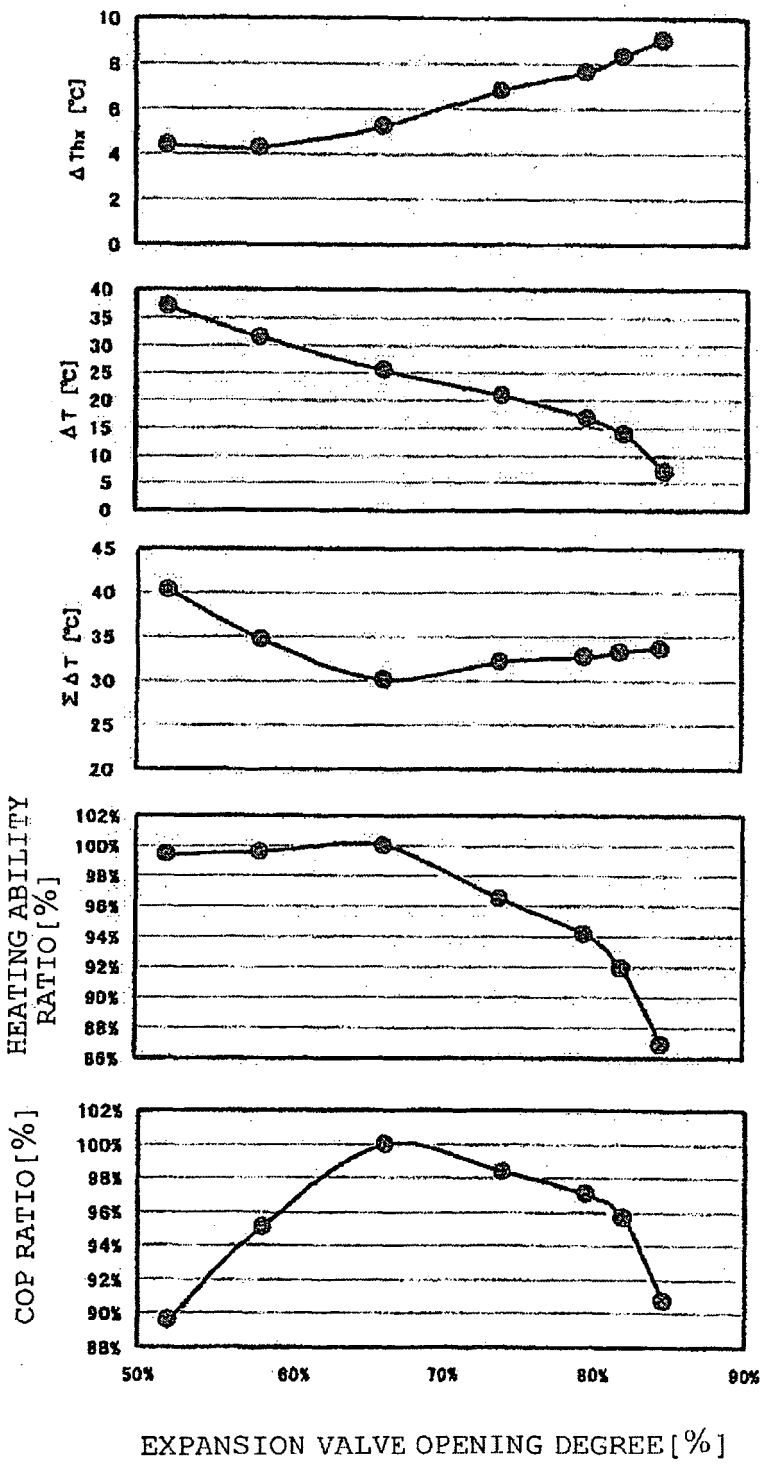
ΔThx [℃]
ΔT [℃]
ΣΔT [℃]
HEATING ABILITY RATIO [%]
COP RATIO [%]
50%
60%
70%
80%
90%
EXPANSION VALVE OPENING DEGREE [%]

F I G. 7

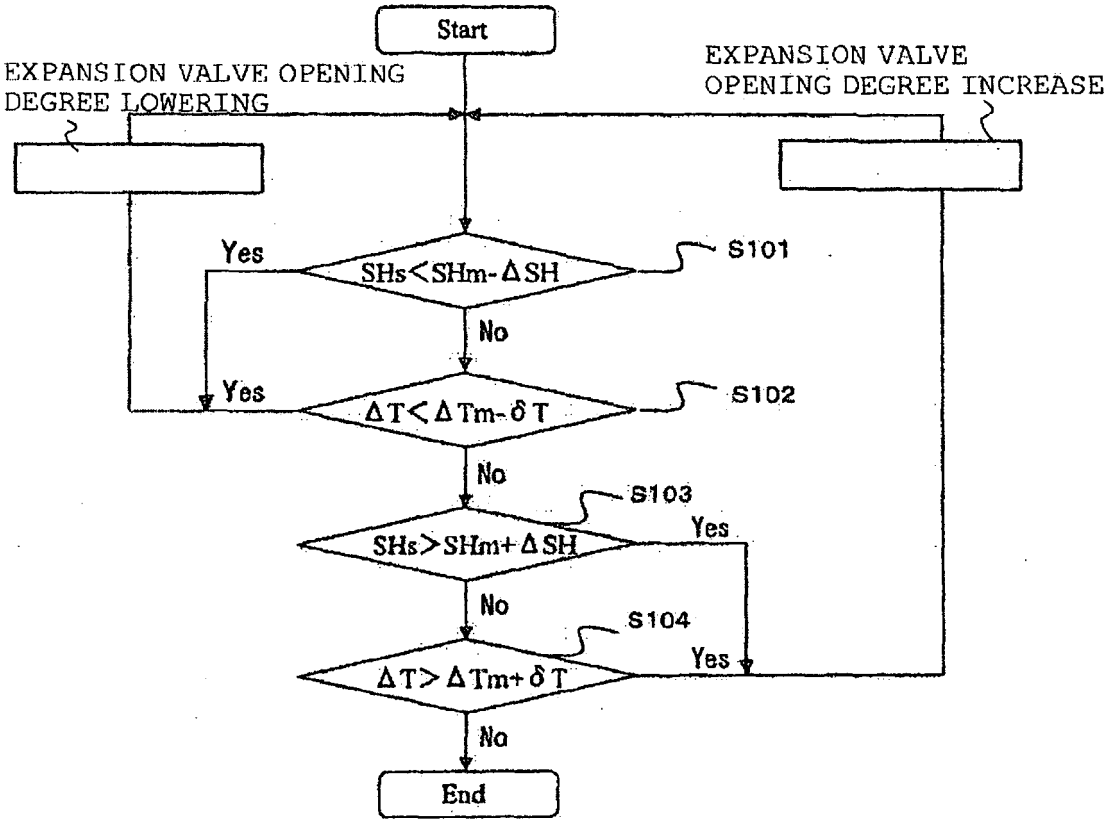
Start
EXPANSION VALVE OPENING DEGREE LOWERING
EXPANSION VALVE OPENING DEGREE INCREASE
Yes
SHs<SHm-ΔSH
S101
No
Yes
ΔT<ΔTm-δT
S102
No
S103
SHs>SHm+ΔSH
Yes
No
S104
ΔT>ΔTm+δT
Yes
No
End

F I G. 8

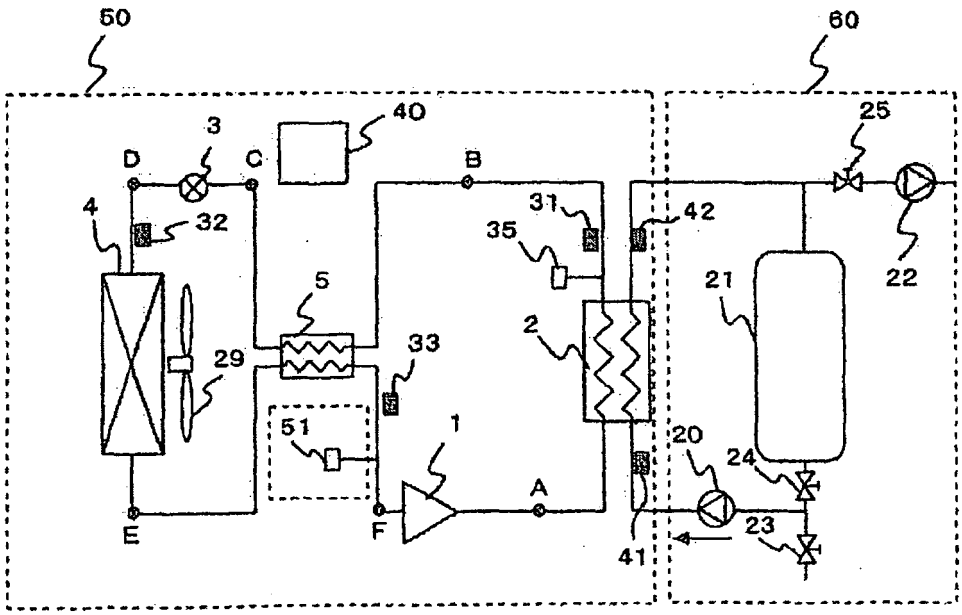
50
60
3
40
25
D
C
B
4
32
31
42
35
22
5
21
2
29
33
51
1
20
24
A
E
F
23
41

FIG. 9

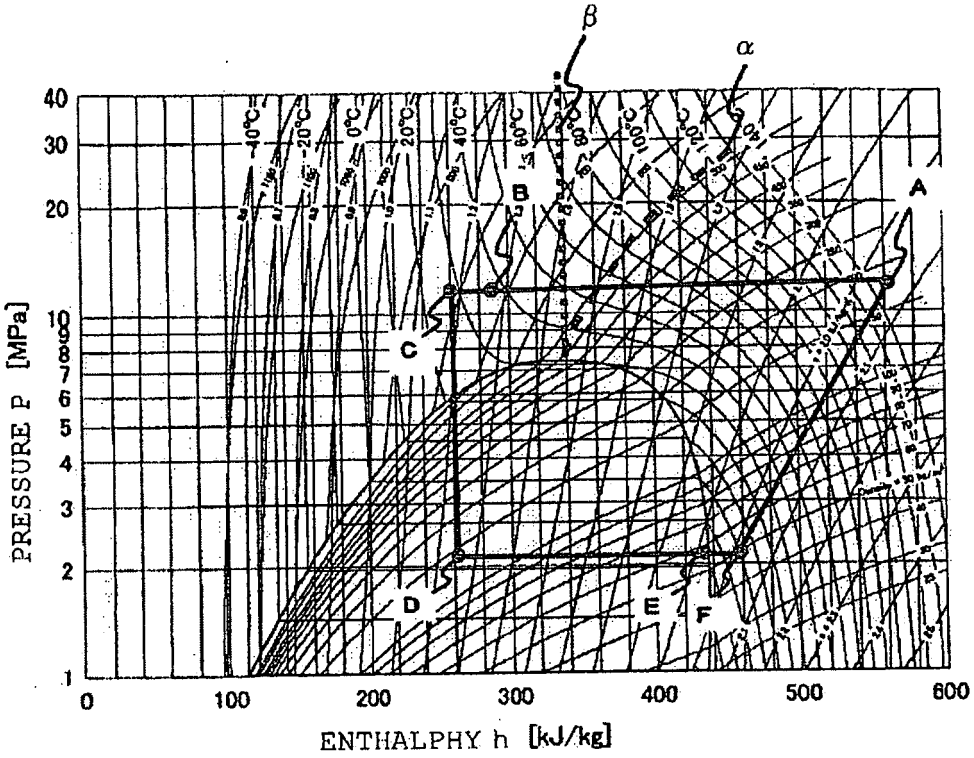
β
α
A
B
C
D
E
F
PRESSURE P [MPa]
ENTHALPHY h [kJ/kg]
40
30
20
10
9
8
7
6
5
4
3
2
1
0
100
200
300
400
500
600

## REFERENCES CITED IN THE DESCRIPTION

*This list of references cited by the applicant is for the reader's convenience only. It does not form part of the European patent document. Even though great care has been taken in compiling the references, errors or omissions cannot be excluded and the EPO disclaims all liability in this regard.*

### Patent documents cited in the description


- US 2003061827 A **[0003]**
- JP 3601369 B **[0005]**
- JP 3227651 B **[0007]**
- US 20030061827 A1 **[0009]**
- JP 2005315558 A **[0010]**