E. EGAN.

COMPRESSED AIR EXHAUST MUFFLER.

APPLICATION FILED JUNE 16, 1914.

**1,170,807.** Patented Feb. 8, 1916.

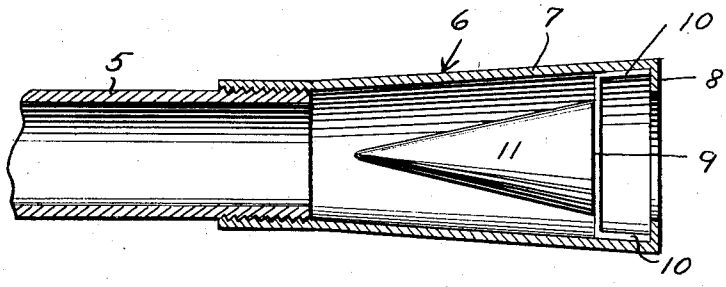


Fig. 1.

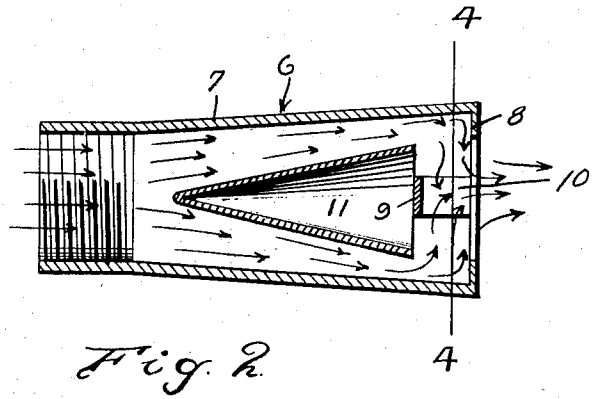


Fig. 2.

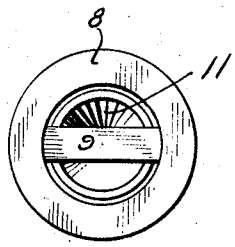


Fig. 3.

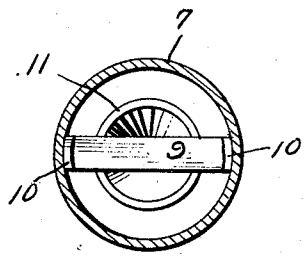


Fig. 4.

Witnesses

Milton Jester

H. Richardson

Inventor

Eugene Egan

By Chandlee & Chandlee.

Attorneys

# UNITED STATES PATENT OFFICE.

EUGENE EGAN, OF KINGSTON, NEW YORK.

## COMPRESSED-AIR-EXHAUST MUFFLER.

1,170,807. Specification of Letters Patent. Patented Feb. 8, 1916.

Application filed June 16, 1914. Serial No. 845,453.

*To all whom it may concern:*

Be it known that I, EUGENE EGAN, a citizen of the United States, residing at Kingston, in the county of Ulster, State of New York, have invented certain new and useful Improvements in Compressed-Air-Exhaust Mufflers; and I do hereby declare the following to be a full, clear, and exact description of the invention, such as will enable others skilled in the art to which it appertains to make and use the same.

This invention relates to compressed air devices, particularly to the exhaust therefor, and has for its object the provision of a muffler for the exhaust, whereby the objectionable noise caused by the passage of the air from the exhaust is eliminated.

An important object is the provision of a device of this character which is so constructed as not to cause back pressure and retard the movement of the compressed air operated device.

A further object is the provision of a device of this character so constructed that the exhaust air is deflected and divided into separate streams which are converged to cause them to counteract each other.

An additional object is the provision of a device of this character which will be simple and cheap in construction, efficient in use, durable in service and a general improvement of the art.

With these objects and advantages in view, the invention consists in the novel construction and arrangement of parts to be hereinafter more fully described and claimed, and illustrated in the accompanying drawing, in which—

Figure 1 is a partial sectional view through my device applied to the exhaust pipe of a compressed air operated mechanism, Fig. 2 is a complete longitudinal sectional view therethrough taken at right angles to Fig. 1, Fig. 3 is an end view, and Fig. 4 is a transverse sectional view on the line 4—4 of Fig. 2.

Referring more particularly to the drawing, the numeral 5 designates a pipe which may be the exhaust from a compressed air drill, hammer, or any other similar device.

My novel muffler is designated as a whole by the numeral 6 and comprises a frusto-conical shell 7 having the interior wall of its smaller end screwthreaded for engagement upon the screwthreaded end of the pipe 5 and terminating at its larger and forward end in an inwardly directed annular flange 8.

Secured within the shell 7 and spaced from the sides thereof by means of a transverse strip 9 having lateral extensions 10 secured upon the shell, is a deflecting member 11 formed as a conical shell having its apex disposed toward the end of the pipe 5.

When air exhausting from the pipe 5 enters the shell 7, it will be divided upon contact with the apex of the deflector 11 and will pass therearound toward the front end of the shell. Upon reaching the forward end of the deflector 11, the air will be divided into two separate streams by the strip 9. As each stream then rushes forward, it will impinge against the annular flange 8 and will be consequently directed inwardly toward the center of the wall as shown by the arrows in Fig. 2. As these two streams strike each other, the velocity of each stream will counteract the other thereby allowing the air to exhaust gently and noiselessly from the device.

It will thus be observed that I have provided a simple device by means of which the exhaust air from a compressed air operated apparatus may be allowed to escape into the atmosphere unaccompanied by the usual disagreeable and objectionable noise.

It will be readily understood that I reserve the right to make such changes in the details of construction of my device as will not depart from the spirit of the invention, the principle of its operation or the scope of the subjoined claim.

Having thus described my invention, I claim:

A muffler for compressed fluid exhausts comprising a casing having one end taperingly enlarged and provided at said end with an inwardly extending annular flange which bounds a discharge opening of a size not less than the inlet at the other end of the casing, and a deflecting member substantially conical in shape disposed in said tapered end of the casing and having its base of substantially the size of the discharge opening.

In testimony whereof I affix my signature, in the presence of two witnesses.

EUGENE EGAN.

Witnesses:
DOMINICK NOONAN.
JAMES CULLUM,

Copies of this patent may be obtained for five cents each, by addressing the "Commissioner of Patents, Washington, D. C."