June 24, 1941. R. J. KIRCHER 2,246,688

AUTOMATIC FREQUENCY CONTROL

Filed June 11, 1940 3 Sheets-Sheet 1

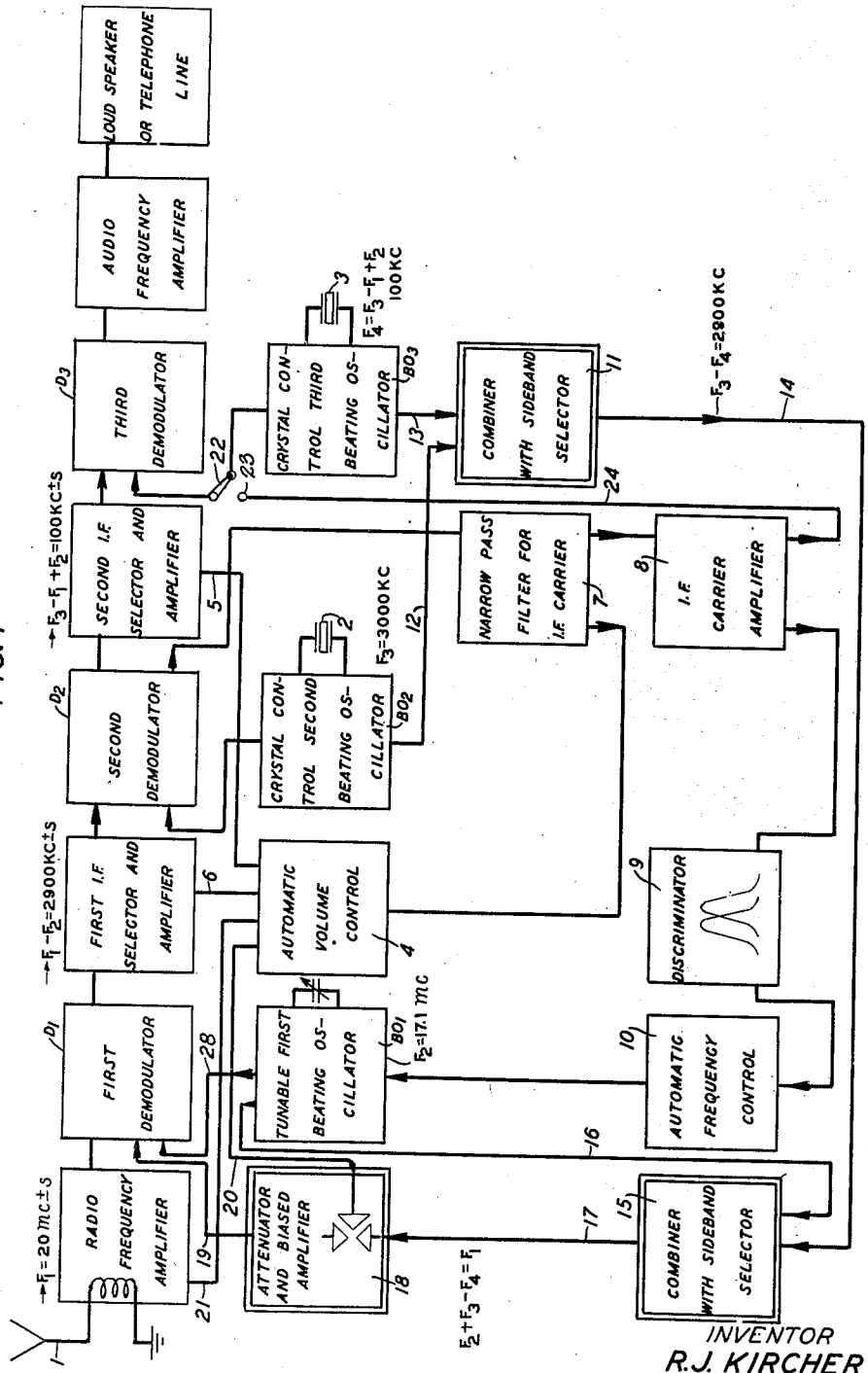

FIG. 1

INVENTOR
R.J. KIRCHER
BY
E. V. Griggs
ATTORNEY

June 24, 1941. R. J. KIRCHER 2,246,688

AUTOMATIC FREQUENCY CONTROL

Filed June 11, 1940 3 Sheets-Sheet 2

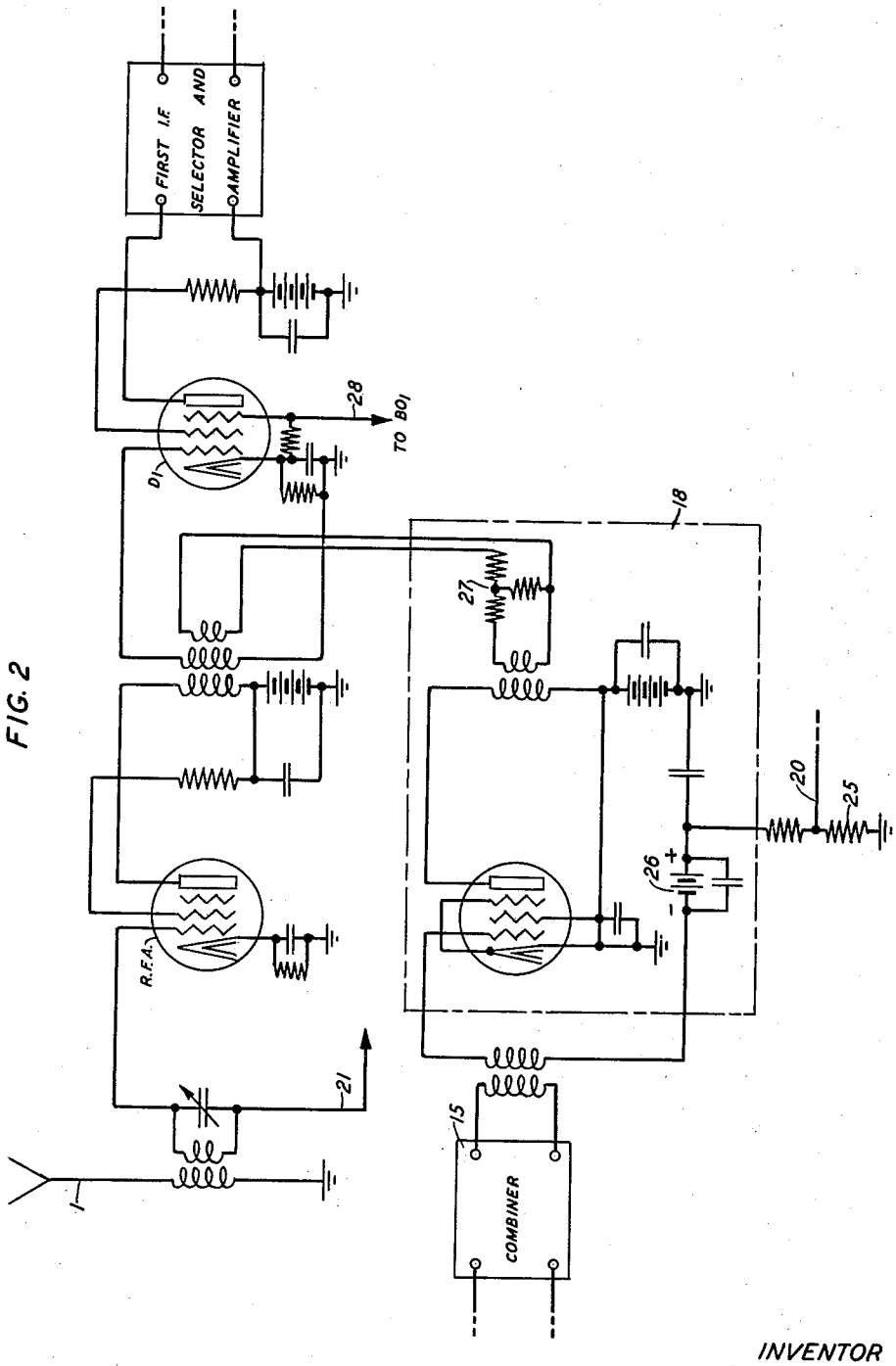

FIG. 2

INVENTOR
R.J. KIRCHER
BY E. V. Griggs
ATTORNEY

June 24, 1941. R. J. KIRCHER 2,246,688

AUTOMATIC FREQUENCY CONTROL

Filed June 11, 1940 3 Sheets-Sheet 3

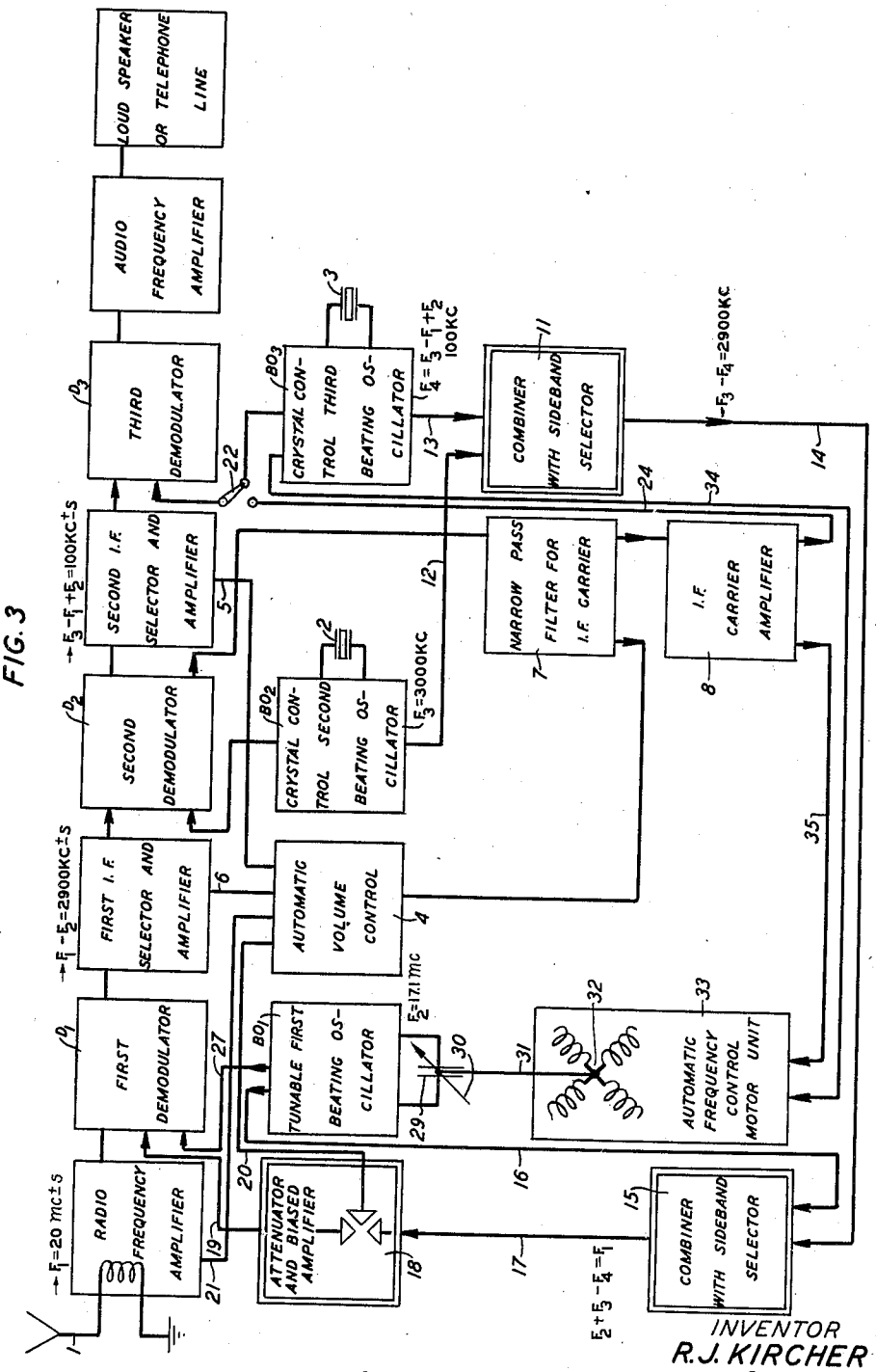

FIG. 3

INVENTOR
R. J. KIRCHER
BY E. V. Bridge
ATTORNEY

Patented June 24, 1941 2,246,688

UNITED STATES PATENT OFFICE

2,246,688

AUTOMATIC FREQUENCY CONTROL

Reymond J. Kircher, Neptune, N. J., assignor to Bell Telephone Laboratories, Incorporated, New York, N. Y., a corporation of New York

Application June 11, 1940, Serial No. 339,871

10 Claims. (Cl. 250—20)

This invention relates to automatic frequency control of the beating oscillator of a carrier wave receiving system.

An object of the invention is to maintain automatic control of the first beating oscillator of a radio receiver of the superheterodyne type irrespective of fading or of the strength of the received incoming carrier wave.

An additional object of the invention is to prevent carrier wave receiving systems having automatic frequency control from shifting so as to tune in an undesired radio transmitter during moments of fading of the desired carrier wave.

A further object of the invention is to prevent inordinate amplification of noise and other extraneous oscillations during moments of fading of the incoming carrier wave by reason of the fact that the automatic volume control apparatus seeks to amplify the incoming carrier wave up to a predetermined level.

A still further object of the invention is to provide a carrier wave receiving apparatus with a local auxiliary or standby source of oscillations which may be substituted for the incoming carrier waves during moments or intervals of severe fading or disappearance of the incoming carrier waves, and which auxiliary oscillations may be so automatically controlled in frequency as to follow the frequency of the incoming carrier wave at all times.

Multiple detection stage systems for carrier wave receivers have long been well known. Such systems employ beating oscillators, the oscillations from which are caused to interact with the incoming carrier wave in devices commonly known as demodulators or frequency changers. Between the successive frequency changers the incoming energy is caused to traverse a band filter or other selective network which, in the interests of noise reduction and selectivity, is ordinarily made to have a relatively narrow pass band sufficiently wide, however, to readily accommodate the essential frequencies of the signal band which it is desired to transmit. Along with the fixed selective networks are employed beating oscillators which are fixed with respect to frequency to the highest possible degree by the use of piezoelectric controls in a manner which is well known. In order that such a system with its fixed selective networks may be employed in a receiver capable of receiving different frequency carrier waves such as those arriving from different broadcast transmitters, it is necessary that the first beating oscillator be made variable to permit the first intermediate frequency carrier wave produced to fall within the band accepted by the first intermediate frequency selective network. It will therefore be seen that the first beating oscillator which is also the highest frequency oscillator of the radio receiver is necessarily much more free to vary in frequency than the other oscillators involved. Moreover, any slight change or drift in its frequency will result in a corresponding change in the intermediate frequency carrier wave which is produced in the first frequency changer. It is therefore highly desirable that the first oscillator be provided with an automatic frequency control as, for example, of one of the types disclosed in U. S. Patent 2,041,855 granted May 26, 1936 to R. S. Ohl. However, since such automatic frequency control devices are based upon energy derived from the incoming carrier wave it may transpire that during severe fading or momentary disappearance of the incoming carrier wave, the automatic frequency control device may no longer be effective and thereby allow the first oscillator to shift frequency or drift uncontrolled to such a point that upon recurrence of the incoming carrier wave, the intermediate frequency waves produced will not fall within the bands accepted by their respective selective circuits. In accordance with the present invention a source of auxiliary or standby oscillations of substantially incoming carrier wave frequency is provided and the source is connected to the input of the radio receiver to supply substitute oscillations for the incoming carrier waves only during such intervals as the incoming carrier waves experience severe fading or disappear. In accordance with an additional feature of the invention the auxiliary carrier waves are produced by combining oscillations from the various local beating oscillators including the first beating oscillator, the frequency of which is automatically controlled, thus insuring that at all times the auxiliary oscillations are in substantial frequency agreement with the incoming carrier waves and are ready to take over the role of the incoming carrier waves whenever the incoming carrier wanes below a useful magnitude.

Other features and objects of the invention will be apparent from a consideration of the following detailed specification taken in connection with the drawings in which Fig. 1 illustrates by a line diagram one embodiment of the invention in a carrier wave receiving system, Fig. 2 shows a portion of the circuits of the system of Fig. 1, and Fig. 3 is a line diagram of a modification

of the carrier wave receiving system of Fig. 1. In the diagram the apparatus components which may be of well-known types are illustrated by labeled boxes. In the interest of simplicity the diagram indicates circuits by single lines, the direction in which the operation proceeds being shown by arrows.

Referring to the drawings an antenna or other receiving circuit 1 for incoming waves is associated with the input terminals of a radio frequency amplifier R. F. A. to the output of which are connected in tandem a first demodulator D_1, a first intermediate frequency selector and amplifier, a second demodulator D_2, a second intermediate frequency selector and amplifier, a third demodulator D_3, an audio frequency amplifier and finally a loudspeaker or telephone line. Connected to the demodulators D_1, D_2, and D_3 are three beating oscillators BO_1, BO_2, and BO_3, respectively. In accordance with the well-known superheterodyne mode of operation, each demodulator serves to change the carrier frequency of the signal modulated waves which it receives by a frequency equal to that of its associated beating oscillator, the oscillator frequencies being so selected that the operation of the final demodulator yields currents of the modulation frequencies.

Assuming that the incoming carrier wave is of 20 megacycles frequency and is modulated by speech signals, the antenna or receiving circuit 1 will preferably be made selective to waves of that frequency. Beating oscillator BO_1 may be designed to produce and to deliver to demodulator D_1 oscillations of a frequency of 17.1 megacycles. The first intermediate frequency selector and amplifier may be designed to transmit the intelligence band of 50 or 60 kilocycles in width in which occurs the speech-modulated intermediate frequency carrier wave of 2900 kilocycles which results from the intermodulation of the 20 megacycle incoming wave and the 17.1 megacycle local oscillations. Demodulator D_2 receives the modulated 2900 kilocycle wave and combines it with oscillations of the frequency of 3000 kilocycles produced by oscillator BO_2 to yield signal modulated intermediate frequency oscillations of a second intermediate frequency of 100 kilocycles which are, in turn, impressed upon demodulator D_3 together with oscillations of 100 kilocycles from the oscillator BO_3. The resultant currents representing the speech signal modulations are supplied by demodulator D_3 to the audio frequency amplifier and in turn to the loudspeaker or telephone line.

In order to enable a receiving system of the type which has been described to be tuned to different incoming carrier waves at will and at the same time to permit the various intermediate frequency selectors to remain fixed, it is desirable, and in fact customary, to make the first local oscillator BO_1 of the tunable electric type. With the correct tuning of the oscillator BO_1 the intermediate frequency produced by demodulator D_1 will be precisely that which the remaining elements of the system are designed to receive. Moreover, the local oscillators BO_2 and BO_3 may be made of the highly constant frequency type equipped with piezoelectric frequency controls as indicated at 2 and 3.

In order to compensate for fading and other undesired variations in the amplitude of the incoming wave a gain control or automatic volume control device 4 of well-known type may apply gain control bias potentials over paths 5, 6 and 21 to the second intermediate frequency selector, the first intermediate frequency selector and the radio frequency amplifier respectively, as indicated. Moreover, the gain control may be extended to other elements of the receiver, if desired. The gain control potential may be derived from the unmodulated intermediate frequency carrier component selected from the output of the demodulator D_2. For this purpose a narrow-pass filter 7 may be employed with a transmission characteristic which is sharply selective for frequencies within a narrow range adjacent to the frequency of the intermediate frequency carrier wave. As is well known, the gain of the receiver as a whole may be controlled by such an automatic volume control device in accordance with the amplitude of the intermediate frequency carrier component. In the absence of excessive fading such a device may be relied upon to maintain the intermediate carrier frequency and consequently the signal-bearing sidebands at substantially a constant amplitude level thus insuring that there is at all times an adequate volume of undistorted signal at the loudspeaker and that the various elements of the receiver including the loudspeaker are not overloaded.

Inasmuch as the frequency of the beating oscillator BO_1 is not piezoelectric controlled, there is a tendency for drifts in frequency of that oscillator to occur which may give rise to undesirable changes in the intermediate frequency yielded by demodulator D_1. To overcome this, oscillator BO_1 is provided with an automatic frequency control which also depends upon the intermediate frequency carrier wave selected by the filter 7. Connected to the output terminals of filter 7 is an intermediate frequency carrier amplifier 8 which employs the intermediate frequency carrier wave and applies it to a discriminator 9, the output of which is connected to an automatic frequency control 10 associated with the oscillator BO_1. For this purpose, discriminator circuits such as those described by Foster and Seeley at Fig. 4, page 297 of the Proceedings of the Institute of Radio Engineers for March 1937 may be employed. The automatic frequency control and its connection to the first beating oscillator may, for example, correspond to the circuit of Fig. 11 or to that of Fig. 14 of the Foster and Seeley disclosure. As an alternative, the discriminator 9 and the automatic frequency control 10 may be replaced by the electromechanical synchronizing apparatus shown in the broken line box A of Fig. 1 of Ohl 2,041,855. In this case, the variable condenser 19 of the Ohl disclosure will correspond to a variable capacity element of the beating oscillator BO_1. The apparatus 9 and 10 will serve to hold the frequency of the oscillator BO_1 in correct relationship with the frequency of the incoming wave so that the difference frequency as evidenced by the frequency of the oscillations in the output circuit of demodulator D_1 will be substantially constant.

It may transpire in the course of operation of a receiver such as has been described that the incoming wave will fade to such an extent that the intermediate frequency carrier component in the output of demodulator D_2 is no longer sufficiently strong to suffice for the frequency control operation. Under such circumstances, the gain control device will endeavor to increase the gain and will accentuate any noise or other disturbance which may tend to be accepted by the filter 7. It is possible that under these circumstances the automatic frequency control may effectively lapse

permitting the oscillator BO_1 to drift or change in frequency to such a point as to enable some unwanted incoming carrier wave to secure control of the receiver and to make it necessary to manually retune the oscillator BO_1 in order to receive the desired incoming wave when it reappears. In order to preclude such a faulty operation of the automatic frequency control, this invention provides a local standby source of oscillations which may be introduced into the receiving circuit 1 during such periods as the intermediate frequency carrier wave falls below the amplitude desirable for maintaining automatic frequency control. The local standby source comprises a combination of the three local oscillators BO_1, BO_2 and BO_3, together with combining devices in an arrangement such as to permit oscillations to be produced by first combining waves from two of the sources and then beating the resultant with waves from a third source. In this manner, the standby oscillations are of a frequency which, at every instant, is solely a function of the three local oscillators. Consequently, if the three local oscillators have been operating at proper frequencies to receive a desired signal modulated carrier wave, the frequency obtained from the standby source is of the proper numerical value so that if the incoming wave fades out the standby oscillation may be supplied in lieu thereof to prevent drift of the system and particularly to prevent drift of the frequency of oscillator BO_1.

The system for producing the standby oscillations comprises a combiner 11 to which oscillators BO_2 and BO_3 are connected by paths 12 and 13. Assuming that oscillator BO_2 is producing oscillations of 3000 kilocycles and oscillator BO_3 is producing oscillations of 100 kilocycles, the combiner 11 may be so designed as to select the lower or difference frequency of 2900 kilocycles and to apply oscillations of that frequency to the path 14 which leads to a second combiner 15. The output circuit of oscillator BO_1 may also be connected to the combiner 15 by means of a path 16. Combiner 15 may, therefore, produce and select the oscillations of the upper sideband or sum frequency of 17.1 megacycles plus 2900 kilocycles or 20 megacycles. These standby oscillations of 20 megacycles may then be applied over a path 17 to the attenuator and biased amplifier 18, the function of which is to prevent transmission of the standby oscillations when the intermediate frequency carrier wave in the output of demodulator D_2 is sufficiently strong, but to permit the standby oscillations to be applied to the input terminals of demodulator D_1 over path 19 whenever the intermediate frequency carrier waves in the output of demodulator D_2 fall to a level such that there is danger that the automatic frequency control will lose control of the oscillator BO_1. In Fig. 1, the device 18 is indicated diagrammatically as including a normally open or inoperative transmission path adapted to be closed or rendered operative under the control of the automatic volume control electromotive force impressed over path 20. The device 18, which is illustrated in Fig. 2 and which will be explained in more detail in connection with the description of that figure, is of the electron discharge amplifier type and is subjected to the normal polarizing grid bias potential applied over the path 20. During normal operation when the desired incoming wave produces a sufficiently strong intermediate frequency carrier in the output of demodulator D_2 the automatic volume control device 4 maintains the biased amplifier 18 paralyzed and the standby oscillations are not impressed from the source 15 upon the circuit 1. When, however, severe fading reduces the intensity of the intermediate frequency oscillations below a critical point automatic volume control device 4 removes the paralyzing grid bias from the amplifier 18 and permits the desired standby oscillation to be supplied to the first demodulator. A mechanical device such as a relay, or relays, operated by the automatic volume control could also be used to perform the same function.

The output path 19 may in an alternative arrangement be connected to the circuit 1 to supply the standby oscillations from source 15 to the input of the radio frequency amplifier.

In the system, as illustrated, source BO_3 is connected to the demodulator D_3 by a switch 22. If desired, the switch 22 may be thrown to its alternate position at 23 to disconnect the source BO_3 from demodulator D_3. In that alternate position oscillations of the intermediate carrier frequency present in the output of demodulator D_2, selected and substantially freed from accompanying sideband components by the filter 7 may be impressed over the path 24 after amplification by amplifier 8 upon the input of demodulator D_3 to supply the local beating oscillations for the final demodulation stage.

Fig. 2 illustrates some of the circuit details of the system of Fig. 1 including the attenuator and biased amplifier element 18. As indicated, the element 18 includes an electron discharge device of the pentode type to the control grid circuit of which the output of combiner 15 is connected to impress standby oscillations. The grid circuit is also connected by path 20 to gain control device 4. The potential impressed over path 20 by the gain control 4 is normally such that the bias potential produced across resistance element 25 in the grid circuit of the discharge device is sufficiently great to insure that the device be held substantially in non-conducting condition. In other words, the net bias potential upon the control grid in consequence of the joint effects of the potential across resistance 25 and the biasing potential of source 26 is sufficient to prevent passage of substantial space current between the cathode and anode of the tube. The electromotive force of source 26 is less than the cut-off bias potential of the tube. Accordingly, when the current in path 20 decreases to tend to make the grid less negative a point is reached at which the grid potential permits space current to flow in the discharge device. This point is preferably made such that transmission through the element 18 begins when the intensity of the incoming carrier wave has so weakened as to make continued control of the oscillator frequency of the oscillator BO_1 undependable. The tube of amplifier 18 will then begin to act as an amplifier and will transmit standby oscillations from combiner 15. After amplification by the discharge device these standby oscillations are impressed upon an attenuator 27 from the output terminals of which they are supplied at a low but reliable control volume to the input circuit of the first demodulator D_1 to take the place of the incoming carrier frequency oscillations which have virtually disappeared. The first beating oscillator BO_1 is connected over path 28 to the suppressor grid of the demodulator D_1 and, accordingly, as a result of interaction of the standby oscillations

supplied to the input of the demodulator D_1 and of the local high frequency oscillations supplied by oscillator BO_1, intermediate frequency oscillations will be produced and supplied to the first intermediate frequency selector and amplifier.

The system of Fig. 3 is similar to that of Fig. 1 but differs principally in the apparatus for automatic frequency control of the first beating oscillator. The oscillator BO_1 is provided with a variable capacitance element **29**, a rotor element **30** of which is mechanically connected to a shaft **31** driven by a two-phase motor **32**. The motor **32** constitutes an element of an automatic frequency control motor unit **33** which may correspond to the apparatus of the unit represented by the broken line rectangle B of Fig. 1 of Patent 2,041,855 to Ohl. Such a unit must be provided with connections from two intermediate frequency sources one of which is dependent upon the incoming signals and the other of which is a local source independent of the incoming signals. The electrical connection which, in the Ohl disclosure, is made to the intermediate frequency oscillator **27** may, in the system of Fig. 3, be the path **34** leading from intermediate frequency oscillator BO_3. The connection which, in the Ohl disclosure, is made to the smoothing stage **13** or smoothing stage **20** may, in the system of Fig. 3, be the path **35** from the intermediate frequency carrier amplifier **8**. The amplifier **8** is preferably a smoothing stage or, in other words, is a highly overloaded amplifier with a relatively sharply selective or narrow transmission band output circuit. The operation of the device **33** will correspond to that of the apparatus B of the Ohl disclosure except that whereas in Ohl the motor serves to vary a capacity associated with an intermediate frequency oscillator, in the circuit of Fig. 3 the motor varies a capacity element associated with the high frequency beating oscillator BO_1, thus maintaining the tuning of that oscillator at the proper numerical frequency to assure efficient operation of the superheterodyne receiver with its subsequent fixed intermediate frequency selectors. In other respects, the apparatus and circuit features of the system of Fig. 3 correspond to the similarly designated elements of Fig. 1.

What is claimed is:

1. A superheterodyne radio receiver for receiving modulated incoming carrier waves comprising a plurality of local sources of beating oscillations for interacting with the incoming carrier wave whereby currents corresponding to its modulations may be derived and means responsive to the magnitude of the carrier component of the incoming wave for introducing auxiliary locally produced oscillations of substantially the incoming carrier frequency into the receiving system only during such periods as the amplitude of the carrier component falls below a predetermined minimum.

2. The combination according to claim 1, characterized in this, that the local sources of beating oscillations are interconnected with modulators to produce the auxiliary locally produced oscillations of substantially the incoming carrier frequency.

3. In combination, a circuit on which incoming carrier waves may be impressed, a source of local oscillations for interacting with the incoming carrier waves, means for controlling the frequency of the source of local oscillations to hold it fixed with respect to the frequency of the incoming oscillations, an auxiliary source of oscillations of substantially the incoming carrier wave frequency and means responsive to the magnitude of the incoming carrier wave for connecting the auxiliary source to said circuit only when the magnitude of the incoming carrier wave falls below a predetermined value.

4. A triple detection radio receiver comprising a receiving path, three local beating oscillators connected thereto to interact in succession with received incoming carrier waves, an automatic volume control device connected to the path and responsive to the magnitude of the unmodulated carrier component of the received waves, means for combining oscillations from the three oscillators to produce auxiliary unmodulated oscillations of substantially the incoming carrier wave frequency and means controlled by the automatic volume control device to apply the auxiliary unmodulated oscillations to the incoming terminal of the receiving path when the unmodulated component of the incoming carrier wave falls below a preassigned limit.

5. A heterodyne system for receiving carrier waves comprising a path over which incoming waves may be received, a local source connected to the path, means responsive to the variations in the frequency of the beat frequency oscillations resulting from interaction of the incoming oscillations and those of the local source for controlling the frequency of the local source, an auxiliary source for producing oscillations simulating the incoming carrier waves in frequency and means responsive to the magnitude of the beat frequency oscillations for applying simulated carrier waves from said auxiliary source to said path only when the magnitude of the incoming waves is less than a predetermined level.

6. A carrier wave receiving system of the type in which the incoming carrier wave is caused to interact successively with oscillations from a plurality of local sources, the first of said sources to interact being tunable to enable selection of a desired carrier wave and the remaining local sources being of a highly stable fixed frequency type, means for automatically controlling the frequency of the first source to cause it to remain at a substantially constant frequency separation from that of the incoming carrier wave, means for producing auxiliary oscillations of substantially the carrier frequency by combination of oscillations from the local sources and means responsive to the magnitude of the incoming carrier waves for applying the auxiliary oscillations to input terminals of the receiving system only when the incoming carrier wave fades below a predetermined level.

7. A multiple detection carrier wave receiver comprising a conductor over which incoming carrier waves may be received, a plurality of frequency-changing stages connected in tandem thereto, each of said stages including a local oscillator, means for deriving oscillations from each of the local oscillators and for combining them to produce auxiliary oscillations of substantially the incoming carrier wave frequency and means responsive to the magnitude of the incoming carrier wave energy to apply the auxiliary oscillations to the conductor during such periods only as the magnitude of the incoming carrier wave falls below a predetermined minimum.

8. A successive detection receiving system for

incoming carrer waves comprising a conductor over which the waves may be received, a source of locally produced oscillations for interacting with the incoming waves, an automatic volume control apparatus responsive to the magnitude of resulting beat waves, a standby source of oscillations of substantially the incoming carrier wave frequency and means responsive to the automatic volume control apparatus to connect the standby source to the conductor when the magnitude of the resultant beat waves falls to such a point as to cause an inordinate amplification of noise.

9. A plural step detection carrier wave receiver comprising a conductor upon which received carrier waves may be impressed, a detector connected thereto, a tunable beating oscillator connected to the detector to impress locally produced oscillations thereon to interact with the received carrier waves and produce resultant waves of different frequency having the same modulations as the incoming carrier waves, a local auxiliary source of waves of substantially the incoming carrier wave frequency and means controlled by the magnitude of the resultant waves to connect the auxiliary source to the conductor to supply substitute waves for the incoming carrier waves during such periods only as said magnitude falls below a predetermined level.

10. A multiple detection carrier wave receiving system of the type comprising a plurality of local oscillation sources which interact in sequence with incoming carrier waves, an automatic frequency control device for the first oscillation source responsive to resultant waves produced by interaction of the incoming carrier waves and oscillations from the first source and means for preventing failure of the automatic frequency control device when the incoming carrier waves fade out or otherwise drop below a definite level comprising an auxiliary source of waves to simulate incoming carrier waves and a normally inactive connection from the auxiliary source to the receiving system which upon disappearance of the incoming carrier waves is rendered active to supply auxiliary waves to the receiving system and thereby maintain operation of the automatic frequency control.

REYMOND J. KIRCHER.