Jan. 30, 1968 S. L. KANTER 3,366,114

ILEOSTOMY APPLIANCE

Filed June 29, 1964

Fig. 1

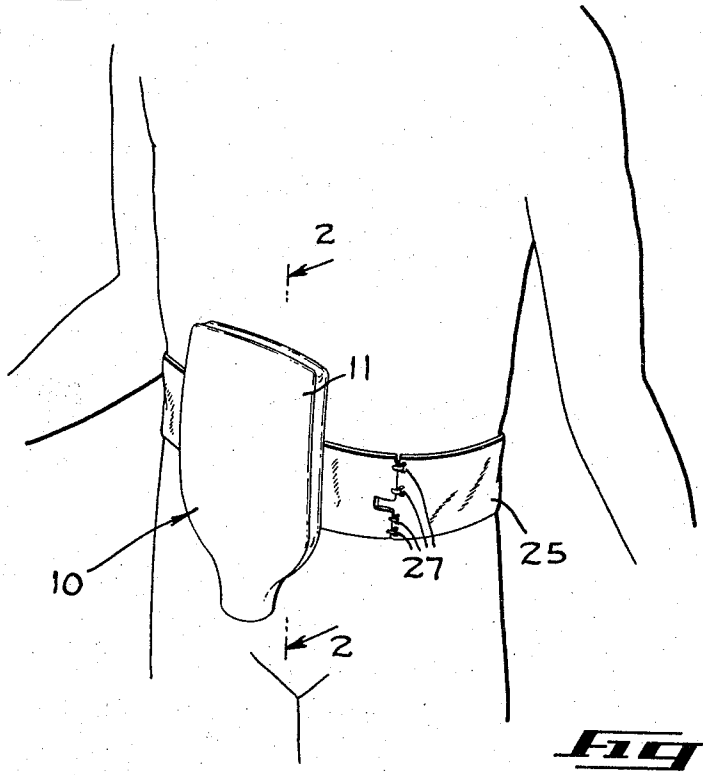

Fig. 3

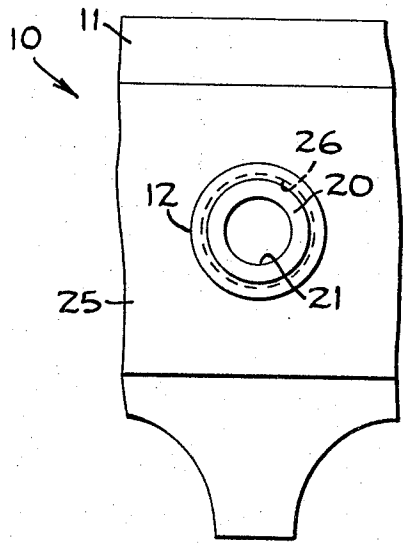

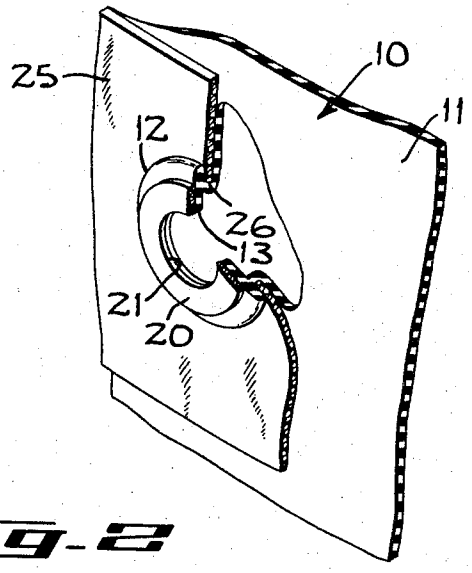

Fig. 2

INVENTOR.
SAUL L. KANTER

BY Jack M. Wiseman

ATTORNEY

United States Patent Office 3,366,114 Patented Jan. 30, 1968

3,366,114

ILEOSTOMY APPLIANCE

Saul L. Kanter, 364 N. Rengstorff, Mountain View, Calif. 94040

Filed June 29, 1964, Ser. No. 378,691
3 Claims. (Cl. 128—283)

ABSTRACT OF THE DISCLOSURE

An ileostomy appliance comprises a detachable, cloth gasket disposed against the planar front face of an annular mounting for engagement with the body of the user. After the gasket is caused to adhere to the front face of the mounting, a mixture of zinc ointment and corn starch is applied to the exposed surface of the gasket. Thereupon, powdered karaya gum is applied to the zinc ointment-corn starch mixture. Now, the ileostomy appliance is prepared to have the gasket thereof aligned with the stoma of the body of the user for engagement with the surrounding wall of the stoma.

The present invention relates in general to medical appliances, and more particularly to ileostomy and colostomy appliances.

Heretofore, an adhesive, such as rubber cement, was applied to the body of the user and to the body ring of an ileostomy or colostomy appliance for adherence to the body of the user. This procedure was often painful and irritating and sometimes caused infections. Further, certain individuals were allergic to the rubber cement.

An object of the present invention is to provide an improved ileostomy appliance, colostomy appliance and the like.

Another object of the present invention is to provide an ileostomy appliance, colostomy appliance and the like that reduces the seepage of waste material onto the skin of the user.

Another object of the present invention is to provide an ileostomy appliance, colostomy appliance and the like that is more comfortable to the user and tends to protect the user's skin.

Another object of the present invention is to provide an ileostomy appliance, colostomy appliance and the like that could be employed with facility and ease of operation.

Other and further objects and advantages of the present invention will be apparent to one skilled in the art from the following description taken in conjunction with the accompanying drawings, in which:

FIG. 1 is a perspective view of the ileostomy appliance of the present invention attached to the body of a user.

FIG. 2 is a fragmentary perspective view of the ileostomy appliance of the present invention as viewed substantially in a direction taken from the line 2—2 of FIG. 1.

FIG. 3 is a fragmentary front elevational view of the ileostomy appliance taken from the same direction as FIG. 2.

Illustrated in FIGS. 1–3 is the ileostomy appliance **10** of the present invention. While the appliance **10** may be described herein as an ileostomy appliance, it is to be understood that the principles disclosed herein are equally applicable to the colostomy appliance and the like.

The ileostomy appliance **10** comprises a conventional and well-known ileostomy bag or pouch **11**. Projecting outwardly from the ileostomy bag **11** is a well-known ring or mounting **12**, which forms an inlet opening and passageway **13**, whereby waste material from the body of the user flows therethrough into the ileostomy bag **11**. The ring or mounting **12**, as is the bag **11**, is made of suitable material, such as rubber or plastic.

As shown in FIG. 2, the forward face of the mounting **12** is disposed in substantially a vertical plane and the axis thereof is substantially horizontal. The rearward face of the mounting **12** appears as an annular flange spaced axially from the forward wall of the ileostomy bag **11**.

According to the present invention, a detachable gasket **20** made of a cloth material, such as felt, is disposed against the planar front face of the annular mounting **12** and aligned axially with the axis of the ring **12**. The opening **21** is in register with the opening **13** of the mounting **12**. In detachably securing the gasket **20** to the mounting **12** any suitable adhesive may be employed, such as commonly employed cements for detachably securing a felt object to a rubber or plastic object. Hence, the opening **21** formed in the gasket **20** is in registry with the opening **13** of the ring **12**. The exposed annular wall of the gasket **20** engages the body of the user and the opening **21** thereof is of a suitable size to encircle the stoma of the user. Thus, waste material from the user passes through the opening **21** of the gasket **20**, through the opening and passageway **13** of the mounting **12** into the ileostomy bag **11**. The felt gasket **20** is a disposable and easily replaceable member.

After the gasket **20** is caused to adhere to the front face of the mounting **12**, a mixture of zinc ointment and corn starch is applied to the exposed surface of the gasket **20** that engages the body of the user. Thereupon, powdered karaya gum or a similar substance of hydrophilic property is applied to the zinc ointment-corn starch mixture. A suitable petrolatum base ointment may be employed in lieu of the zinc ointment. In addition, the zinc ointment-corn starch mixture is applied to the skin of the user around the stoma. Now, the ileostomy appliance **10** is prepared to have the gasket **20** thereof aligned with the stoma of the body of the user for engagement with the surrounding wall of the stoma.

It has been found that the karaya gum with the zinc ointment and corn starch mixture will absorb seepage of fluid to protect the skin. The corn starch tends to urge the seepage of this fluid secreted from the stoma area to mix with the karaya gum. The gasket tends to facilitate the relocation of the appliance relative to the stoma of the user by improving maneuverability of the appliance relative to the body.

While zinc ointment, corn starch and karaya gum have been found to be the preferred ingredients applied to the exposed surface of the gasket **20** for application to the body of the user, it is to be understood that equivalent substances or ingredients may be substituted for one or more of the above delineated ingredients. The quantity of the respective ingredients in the mixtures have not been found to be critical as long as a paste type substance is created for application to the exposed surface of the gasket **20** and the body.

For supporting the ileostomy appliance **10**, a relatively wide elastic belt **25** is provided. In the preferred embodiment, the width of the belt **25** is in the vicinity of four inches. The belt **25** is disposed between the rearward face of the mounting **12** and the forward wall of the ileostomy bag **11**. A suitable opening **26** is formed in the belt **25** to receive the annular flange of the ring mounting **12**. The belt **25** is detachably secured to the body of the user by suitable means, such as hooks and eyelets **27**. In adjusting the length of the belt **25** to accommodate the size of the waist of the user, the rows of eyelets are aligned vertically, but are spaced circumferentially. It has been found that a wide, elastic belt creates sufficient tension to keep a tight application between the gasket **20** and the body of the user so as to obviate the need of the application of an adhesive to the skin of the user.

In using the ileostomy appliance **10**, the opening **26** in the elastic belt **25** receives the annular flange of the

mounting ring **12**. The belt **25** is then disposed between the rearward face of the mounting **12** and the forward wall of the ileostomy bag **11**. Thus, the belt **25** is now detachably secured to the ileostomy appliance **10**.

Now, the disposable gasket **20** is caused to adhere to the front face of the ring mounting **12** with the axial opening **21** thereof in register with the axial opening **13** of the ring mounting **12** and in communication with the ileostomy bag **11**.

A mixture of zinc ointment and corn starch is thereupon applied to the exposed surface of the gasket **20** that engages the skin of the user. At this time, powdered karaya gum is applied to the zinc ointment-corn starch mixture. Zinc ointment and corn starch is also applied to the body of the user around the stoma. Now, the belt **25** is wrapped around the waist of the user with the opening **21** of the disposable felt gasket **20** in registry with the stoma of the user and with the disposable felt gasket **20** engaging the skin or wall of the body of the user surrounding the stoma.

Waste material from the body of the user flows from the stoma through the opening **21** of the gasket **20**, through the opening and passageway **13** of the ring mounting **12** and into the ileostomy bag **11**.

It is to be understood that modifications and variations of the invention disclosed herein may be resorted to without departing from the spirit of the invention and the scope of the appended claims.

Having thus described my invention, what I claim as new and desire to protect by Letters Patent is:

1. A medical appliance comprising a container for receiving waste material, a mounting on said container, said mounting being formed with a passageway communicating with said container for guiding waste material thereinto, a detachable gasket adhering to said mounting, said gasket being arranged to engage the body of the user and being formed with an opening to receive therethrough waste material from the body of the user, said opening formed in said gasket being in communication with said passageway of said mounting, and means including zinc ointment and corn starch applied to said gasket at the portion thereof arranged to engage the body of the user.

2. A medical appliance comprising a container for receiving waste material, a mounting on said container, said mounting being formed with a passageway communicating with said container for guiding waste material thereinto, a detachable gasket adhering to said mounting, said gasket being arranged to engage the body of the user and being formed with an opening to receive therethrough waste material from the body of the user, said opening formed in said gasket being in communication with said passageway of said mounting, and a mixture of zinc ointment, corn starch and karaya gum applied to said gasket at the portion thereof arranged to engage the body of the user.

3. In combination, a medical appliance container for receiving waste material, a mounting on said container formed with a passageway communicating with said container for guiding waste material thereinto, a detachable gasket adhering to said mounting, said gasket being arranged to engage the body of the user and being formed with an opening to receive therethrough waste material from the body of the user, said opening in said gasket being in communication with said passageway of said mounting, a mixture of zinc ointment, corn starch and karaya gum applied to said gasket at the portion thereof arranged to engage the body of the user, and a relatively wide belt attached between said mounting and said container and arranged to be secured to the body of the user.

References Cited

UNITED STATES PATENTS

2,397,145	3/1946	Joy et al.	106—207
2,703,576	3/1955	Furr	128—283
2,759,838	8/1956	Kolar	106—205
2,988,455	6/1961	Rosenberg et al.	106—205
3,029,187	4/1962	Steinhardt	167—63
3,046,272	7/1962	Strating et al.	106—205
3,077,192	2/1963	Berger	128—283
3,100,488	8/1963	Orowan	128—283

FOREIGN PATENTS

452,590	11/1948	Canada.

RICHARD A. GAUDET, *Primary Examiner.*

C. F. ROSENBAUM, *Examiner.*