United States Patent Office

Des. 189,859
Patented Mar. 7, 1961

189,859

LAMP

Herbert T. Osman, 8621 Ramsgate Ave.,
Los Angeles, Calif.

Filed Oct. 26, 1959, Ser. No. 58,058

Term of patent 3½ years

(Cl. D48—20)

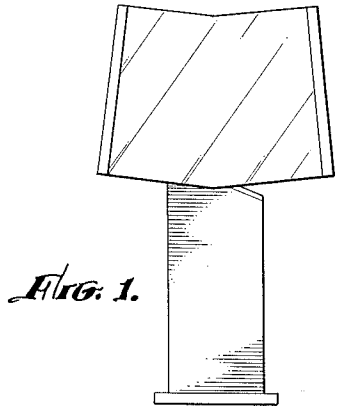

FIG. 1.

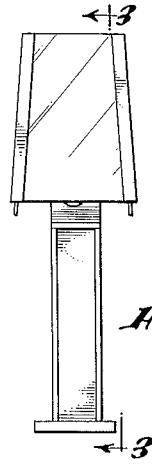

FIG. 2.

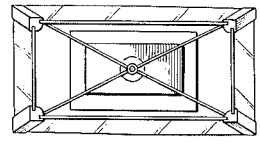

FIG. 4.

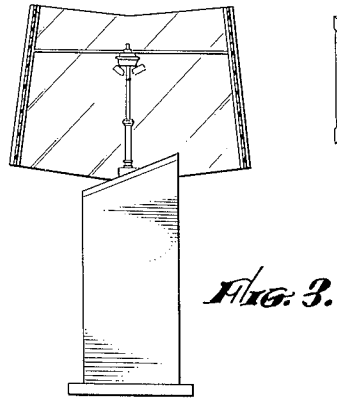

FIG. 3.

Figure 1 is a front elevational view of a lamp embodying my new design;

Figure 2 is a side elevation thereof;

Figure 3 is a view, partly in section, taken along line 3—3 of Figure 2; and

Figure 4 is a top plan view thereof.

I claim:

The ornamental design for a lamp, as shown.

References Cited in the file of this patent

Interiors, August 1957, page 142, lower righthand corner, table lamp.