Office de la Propriété Intellectuelle du Canada
Un organisme d'Industrie Canada

Canadian Intellectual Property Office
An agency of Industry Canada

CA 2139583 C 2005/01/11

(11)(21) 2 139 583

(12) BREVET CANADIEN
CANADIAN PATENT

(13) C

(86) Date de dépôt PCT/PCT Filing Date: 1994/05/23
(87) Date publication PCT/PCT Publication Date: 1994/12/08
(45) Date de délivrance/Issue Date: 2005/01/11
(85) Entrée phase nationale/National Entry: 1995/01/04
(86) N° demande PCT/PCT Application No.: US 1994/005707
(87) N° publication PCT/PCT Publication No.: 1994/028282
(30) Priorité/Priority: 1993/05/27 (08/068,513) US

(51) Cl.Int.^{6}/Int.Cl.^{6} E21B 33/05, H04B 10/10

(72) Inventeurs/Inventors:
BAUGH, JOHN LINDLEY, US;
OWENS, STEVEN C., US;
ROTHERS, DAVID E., US;
HOLCOMBE, MICHAEL W., US

(73) Propriétaire/Owner:
BAKER HUGHES INCORPORATED, US

(74) Agent: SIM & MCBURNEY

(54) Titre : TELECOMMANDE POUR TETE D'OBTURATION
(54) Title: REMOTE CONTROL FOR A PLUG-DROPPING HEAD

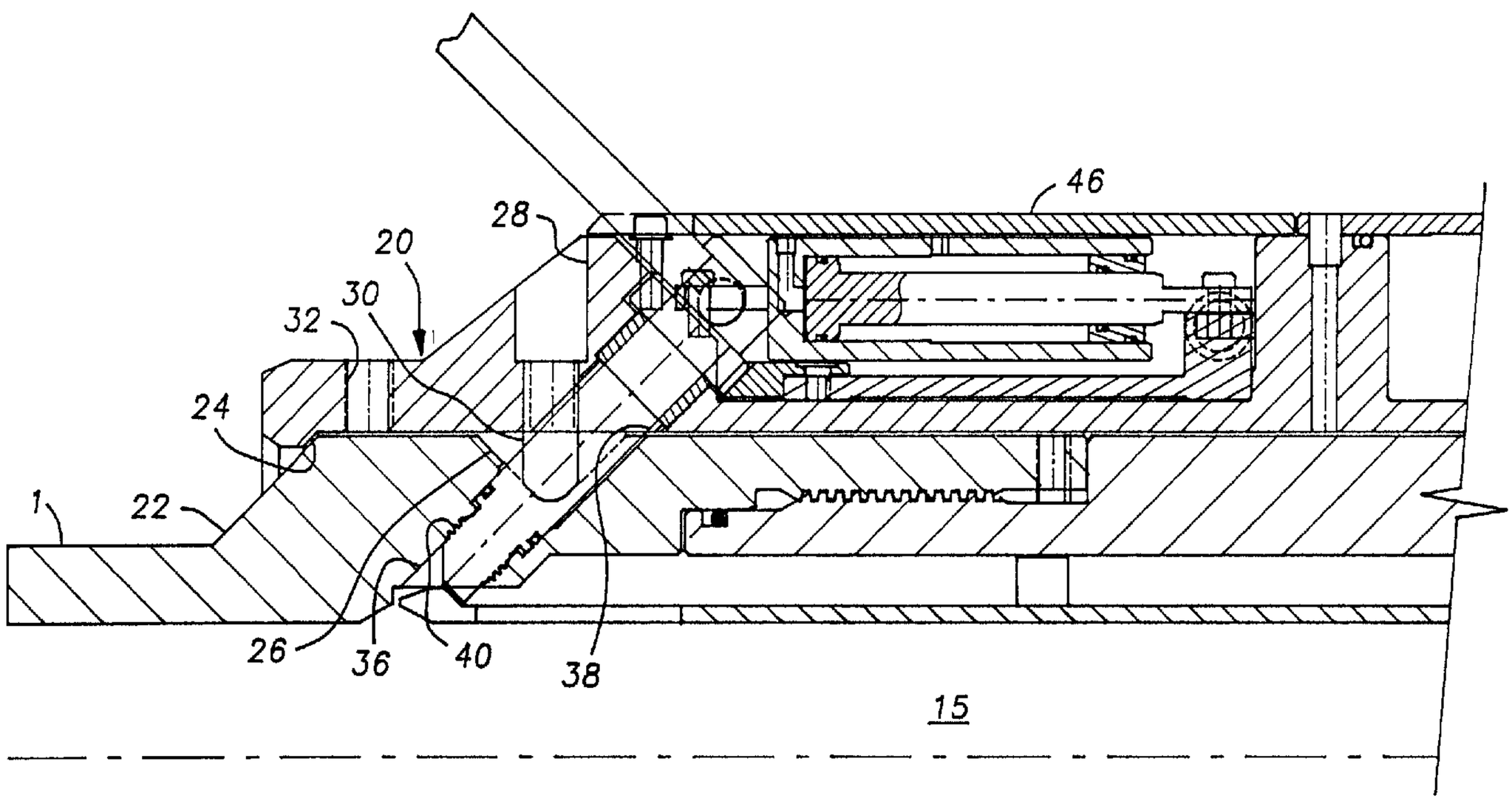

(57) Abrégé/Abstract:
An apparatus and method of dropping a pumpdown plug or ball is revealed. The assembly can be integrally formed with a plug-dropping head or can be an auxiliary feature that is mounted to a plug-dropping head. The release mechanism is actuated by remote control, employing intrinsically safe circuitry. The circuitry, along with its self-contained power source, actuates a primary control member responsive to an input signal so as to allow component shifting for release of the pumpdown plug or ball. Multiple plug-droping heads can be stacked, each responsive to a discrete release signal. Actuation to drop the pumpdown ball or plug is accomplished even while the components are rotating or are moving longitudinally. Using the apparatus and method of the present invention, personnel do not need to climb up in the derrick to actuate manual valves. There is additionally no need for a rig floor-mounted control panel with hydraulic lines extending from the control panel to remotely located valves for plug or ball release.

ABSTRACT OF THE DISCLOSURE

An apparatus and method of dropping a pumpdown plug or ball is revealed. The assembly can be integrally formed with a plug-dropping head or can be an auxiliary feature that is mounted to a plug-dropping head. The release mechanism is actuated by remote control, employing intrinsically safe circuitry. The circuitry, along with its self-contained power source, actuates a primary control member responsive to an input signal so as to allow component shifting for release of the pumpdown plug or ball. Multiple plug-dropping heads can be stacked, each responsive to a discrete release signal. Actuation to drop the pumpdown ball or plug is accomplished even while the components are rotating or are moving longitudinally. Using the apparatus and method of the present invention, personnel do not need to climb up in the derrick to actuate manual valves. There is additionally no need for a rig floor-mounted control panel with hydraulic lines extending from the control panel to remotely located valves for plug or ball release.

REMOTE CONTROL FOR A PLUG-DROPPING HEAD

FIELD OF THE INVENTION

The field of this invention relates to methods and devices usable in the field of oil and gas exploration and production, more specifically devices and methods related to cementing operations involving the cementing of a liner by dropping or by pumping down a plug.

BACKGROUND OF THE INVENTION

Cementing operations have involved the use of plugs as a way of correctly positioning the cement when setting a liner. Some mechanisms have employed the use of pressure or vacuum to initiate plug movement downhole for proper displacement of the cement to its appropriate location for securing the liner properly. The early designs were manual operations so that when it was time to release a plug for the cementing operation, a lever was manually operated to accomplish the dropping of the plug. This created several problems because the plug-dropping head would not always be within easy access of the rig floor. Frequently, depending upon the configuration of the particular well being drilled, the dropping head could be as much as 100 ft. or more in the derrick. In order to properly actuate the plug to drop, rig personnel would have to go up on some lift mechanism to reach the manual handle. This process would have to be repeated if the plug-dropping head had facilities for dropping more than one plug. In those instances, each time another plug was to be dropped, the operator of the handle would have to be hoisted to the proper elevation for the operation. In situations involving foul weather, such as high winds or low visibility, the manual operation had numerous safety risks. Manual operations used in the past are illustrated in U.S. Patent 4,854,383. In that patent, a manual valve realignment redirected the flow from bypassing the plug to directly above it so that it could be driven downhole.

Hydraulic systems involving a stationary control panel mounted on the rig floor, with the ability to remotely operate valves in conjunction with

cementing plugs, have also been used in the past. Typical of such applications is U.S. Patent 4,782,894. Some of the drawbacks of such systems are that for unusual applications where the plug-dropping head turned out to be a substantial distance from the rig floor, the hoses provided with the hydraulic system would not be long enough to reach the control panel meant to be mounted on the rig floor. Instead, in order to make the hoses deal with these unusual placement situations, the actual control panel itself had to be hoisted off the rig floor. This, of course, defeated the whole purpose of remote operation. Additionally, the portions of the dropping head to which the hydraulic lines were connected would necessarily have to remain stationary. This proved somewhat undesirable to operators who wanted the flexibility to continue rotation as well as up or down movements during the cementing operation. Similar such remote-control hydraulic systems are illustrated in U.S. Patent 4,427,065; 4,671,353.

Yet other systems involve the pumping of cement on the rig floor to launch a ball or similar object, the seating of which would urge the cementing plug to drop. Typical of such a system is U.S. Patent 5,095,988. U.S. Patent 4,040,603 shows the general concept of a plug-release mechanism using a hydraulic circuit mounted on the rig floor. U.S. Patent 5,033,113 shows generally the concept of using an infrared receiver to trigger the operation of a device such as an electric fan.

One type of previously used plug-dropping head is the model TD put out by Baker Oil Tools. This device has a plug stop to retain the plug, with a shifting sleeve which in a first position allows the flow to bypass around the plug being retained by the plug stop. Upon manual turning of a set screw, the sleeve shifts, allowing the plug stop to pivot so that the plug is released. The shifting of the sleeve also closes the bypass around the sleeve and forces pressure on top of the plug so that it is driven down into the wellbore in the cementing operation.

The apparatus of the present invention has been designed to achieve several objectives. By putting together an assembly that can be actuated by

remote control from a safe location on the rig floor, the safety aspects of plug dropping have been improved. No longer will an operator be required to go up in the derrick to actuate a single or multiple levers in the context of liner cementing. Use of the apparatus and method of the present invention also eliminates numerous hydraulic hoses that need to be extended from a control panel to the final element necessary to be operated to allow the plug to drop. The plug can be dropped while the rotary table is in operation such that not only rotation but movement into and out of the wellbore is possible as the plug is being released to drop. The equipment is designed to be intrinsically safe to avoid any possibility of creation of a spark which could trigger an explosion. The equipment is compact and economically accomplishes the plug-dropping maneuver while the operator stands in a safe location on the rig floor. The actuation to drop can be accomplished on the fly while the plug-dropping head is being rotated or being moved longitudinally. Plug-dropping heads can be used in tandem and be made to respond to discrete signals. This ensures that the plugs are released in the proper order from a safe location on the rig.

SUMMARY OF THE INVENTION

An apparatus and method of dropping a pumpdown plug or ball is revealed. The assembly can be integrally formed with a plug-dropping head or can be an auxiliary feature that is mounted to a plug-dropping head. The release mechanism is actuated by remote control, employing intrinsically safe circuitry. The circuitry, along with its self-contained power source, actuates a primary control member responsive to an input signal so as to allow component shifting for release of the pumpdown plug or ball. Multiple plug-dropping heads can be stacked, each responsive to a discrete release signal. Actuation to drop the pumpdown ball or plug is accomplished even while the components are rotating or are moving longitudinally. Using the apparatus and method of the present invention, personnel do not need to climb up in the derrick to actuate manual valves. There is additionally no need for a rig

floor-mounted control panel with hydraulic lines extending from the control panel to remotely located valves for plug or ball release.

According to one aspect of the present invention there is provided a control apparatus for a single or multiple plug-dropping tool, comprising:

at least one signal transmitter for sending at least one signal over the air;

at least one signal receiver for receiving said signal from said transmitter and to provide an output;

at least one control system comprising a primary control element; and

at least one signal processor to use said output from said receiver to selectively remotely operate said control element to allow release of a plug from the apparatus by said control system.

According to another aspect of the present invention there is provided a plug-dropping apparatus for downhole use, comprising:

at least one housing;

at least one plug selectively supportable within said housing;

at least one plug stop assembly selectively operable to hold and release said plug;

at least one signal transmitter;

at least one signal receiver on said housing for receiving over the air at least one signal from said transmitter; and

at least one control system, said control system receiving an output from said signal receiver and in response thereto actuating said plug stop to release said plug.

According to another aspect of the present invention there is provided a method of releasing balls or plugs for liner cementing, comprising the steps of:

erecting a remotely mounted apparatus to drop balls or plugs on a casing or liner string;

transmitting a signal over the air from a safe location to the remotely mounted apparatus;

receiving said over-the-air signal at the apparatus; and

using the signal received to trigger release of at least one ball or plug.

According to yet another aspect of the present invention there is provided a plug-dropping apparatus for displacement of a material downhole during the well drilling and completion operations by personnel working on a rig, comprising:

at least one housing;

at least one plug selectively supportable within said housing;

at least one plug stop assembly on said housing selectively operable to hold and release said plug;

at least one signal transmitter operable adjacent the rig and remotely from said housing;

at least one signal receiver on said housing for receiving over the air at least one signal from said transmitter; and

at least one control system positioned at least in part in said housing, said control system receiving an output from said signal receiver and in response thereto actuating said plug stop to release said plug.

According to still yet aspect of the present invention there is provided a method of releasing balls or plugs for liner cementing using a rig, comprising the steps of:

erecting a remotely mounted apparatus to remotely drop at least one ball or plug on a casing or liner string;

electronically transmitting at least one signal over the air from a safe location adjacent the rig to the remotely mounted apparatus;

electronically sensing said over-the-air signal at the apparatus; and using the signal received to trigger release of at least one ball or plug.

BRIEF DESCRIPTION OF THE DRAWINGS

Embodiments of the present invention will now be described more fully with reference to the accompanying drawings in which:

Figure 1 shows an existing prior art plug-dropping head for which a preferred embodiment has been developed.

Figures 2A and 2B illustrate the plug-dropping head of Figure 1, with a few parts removed for clarity, illustrated with the release mechanism of the apparatus and method of the present invention installed and ready to release.

Figure 3 illustrates the piston/cylinder combination in the initial position before release of the plug.

Figure 4 is the same piston/cylinder combination of Figure 3 in the unlocked position after plug release.

Figure 5 is an end view of the view shown in Figure 2, illustrating the spring action feature.

Figure 6 is a detail of Figure 1, showing the existing pin which is changed to accept the invention.

Figure 7 is a sectional elevational part exploded view of the apparatus.

Figure 8 is a sectional view of the apparatus showing the rack.

Figure 9 is an electrical schematic representation of the transmitter used in the invention.

Figures 10 and 11 represent the electrical schematic layout of the components to receive the signal from the transmitter and to operate a valve to initiate release of a ball or plug.

DETAILED DESCRIPTION OF THE PREFERRED EMBODIMENT

Figure 1 illustrates a prior art plug-dropping head available from Baker Oil Tools. The preferred embodiment of the apparatus and invention has been configured to be mountable to the plug-dropping head illustrated in Figure 1 as an add-on attachment. However, those skilled in the art will appreciate that an integral plug-dropping head, with the remote-release mechanism which will be described, can be provided without departing from the spirit of the invention.

In the prior design shown in Figure 1, a top connection **1** is supported from the derrick in the customary manner. Top connection **1** is connected to a mandrel **9**, which is in turn connected to a bottom connection **12**. Inside mandrel **9** is sleeve **8**. At the bottom of sleeve **8** is plug stop **10,** which is connected by roll pin **11** to sleeve **8**. In the position shown in Figure 1, plug stop **10** would retain a ball or plug above it since it extends transversely into the central flowpath. With the sleeve **8** shown in the

position in Figure 1, flow bypasses a plug (not shown) which is disposed atop plug stop 10. Flow which comes in through top connection **1** circulates through a bypass passage **13** until it is time to drop the ball or plug. At that time, set screw **3** is operated and turned 180° manually. The turning of set screw **3** releases its hold on sleeve **8** and allows sleeve **8** to drop down. As a result of sleeve **8** dropping down, plug stop **10** can pivot around roll pin **11** and the plug or ball is released. Additionally, sleeve **8** comes in contact with bottom connection **12**, thereby sealing off bypass passage **13**. Thereafter, circulation into top connection 1 can no longer go through bypass passage **13** and must necessarily bear down on the ball or plug in the central port or passage **15**, which results in a pressure being applied above the plug or ball to drive it through bottom connection **12** and into the liner being cemented in the well.

As previously stated, the operation described in the previous paragraph, with regard to the prior art tool of Figure 1, at times necessitated sending personnel significant distances above the rig floor for manual operation of set screw **3**. Of course, rotation and longitudinal movement of the tool shown in Figure 1 had to stop in order for set screw 3 to be operated to release sleeve **8**.

Referring now to Figures 2A and 2B, the tool in Figure 1 is shown with many of the component omitted for clarity. At the top, again, is top connection **1**, which is connected to mandrel **9**, which is in turn connected to bottom connection **12**. Sleeve **8** sits within mandrel **9**, and pin **11** secures the plug stop (not shown) in the position to retain a ball or plug in the position shown in Figures 2A and 2B. It should be noted that the tool shown in Figure 1 is in the same position when shown in Figures 2A and 2B. That is, the plug stop **10** retains the plug while the flow goes around the sleeve **8**, through the passage **13**. Ultimately, when sleeve **8** shifts, tapered surface **16** contacts tapered surface **18** on bottom connection **12** to seal off passage **13** and to direct flow coming into top connection **1** through the central passage **15** to drive down the ball or plug into the wellbore.

However, there is a difference between the assembly shown in Figures 2A and 2B and the assembly shown in Figure 1. Set screw **3** of Figures 1 and 6 has been replaced by a totally different assembly which eliminates the manual operation with respect to the embodiment shown in the prior art of Figure 1. Instead, a housing **20** has been developed to fit over top connection **1** until it comes to rest on tapered

surface **22**. The housing **20** has a mating tapered surface **24** which, when it contacts tapered surface **22**, longitudinally orients housing 20 with respect to top connection **1**.

Rotational orientation is still properly required. To accomplish this, at least one orienting groove or cutout **26** has been machined into top connection **1**. For each cutout **26** there is an alignment bore **28** in housing **20**. A bolt **30** is advanced through threaded bore **28** until it sticks into and firmly engages cutout **26**. Once at least one bolt **30** is inserted into a cutout **26**, the radial orientation between housing **20** and top connection **1** is obtained. That orientation can be secured with set screws (not shown) inserted through threaded bores **32** and **34**. At that point, not only is housing **20** properly oriented, but its orientation is properly secure. As a result of such orientation, bore **36** in top connection **1** is aligned with bore **38** in housing **20**. Bores **36** and **38** are disposed at an angle with respect to the longitudinal axis of top connection **1**. A preferably square thread **40** is located in bore **36**. Instead of set screw **3** (see Figure 6), a pin **42** (see Figure 7) is installed through aligned bores **36** and **38**. Threads **44** on pin **42** engage thread **40** in bore **36**.

Figure 7 outlines the assembly procedures for the installation of pin **42**. After aligning housing **20**, as previously described, the cover **46** (see Figures 2A and 2B) is removed, allowing access to bore **38** for installation of pin **42**. Pin **42** is advanced and rotated into threads **40** until tapered surface **48** is in an orientation about 180° opposed from that shown in Figure 7. The orientation of surface **48** is determined by the orientation of bore **50**, which does not extend all the way through pin **42**. Bore **50** is designed to accept a handle **52** (see Figures 2A and 2B). The orientation of tapered surface **48** is known by the orientation of bore **50**. Having aligned tapered surface **48** in a position about 180° opposed from that shown in Figure 7, the gear **54** is fitted over pin **42** and handle **52** is extended into bore **50**. By extending handle **52** through catch **56** on gear **54**, the longitudinal positioning of gear **54** with respect to pin **42** is accomplished. Additionally, the orientation of catch **56** allows initial rotation of both pin **42** and gear **54** to get them into the set position shown in Figures 2A and 2B.

Prior to securing the gear **54** onto pin **42**, a pair of split sleeves **58** are fitted to housing **20** and secured to each other by fasteners **60**. A rack **62** (see Figure 8) is secured to sleeves **58** via fasteners **64** (see Figure 7).

As shown in Figure 8, gear **54** meshes with rack **62** such that rotation of pin **42** will rotate sleeves **58**. Also connected to sleeves **58**, as shown in Figure 8, are lug or lugs **66**. In the preferred embodiment there are two lugs **66** secured to sleeves **58** (see Figure 5). Typically for each one, a bolt **68** extends through a piston **70** to secure the piston **70** to lug **66** (see Figures 5 and 8). The piston **70** is an elongated member that extends through a cylinder **72** and is sealed thereto by O-ring seal **74**. Disposed between piston **70** and cylinder **72** is floating piston **76**, which is sealed against cylinder **72** by seal **78** and it is further sealed against piston **70** by seal **80**. A first port **82** allows fluid communication into cavity **84**, which is formed between cylinder **72** and piston **70** and between seal **74** on piston **70** and seal **80** on floating piston **76**. A second port **86** is also disposed in cylinder **72** and communicates

with cavity **88**. Cavity **88** is disposed between piston **70** and cylinder **72** on the other side of seal **74**.

Cylinder **72** has a mounting lug **90**. Bolt **92** secures cylinder **72** in a pivotally mounted orientation to housing **20**.

Referring back to lugs **66**, each has a bracket **94** (see Figure 5) to secure an end of spring **96**. A lug **98** is rigidly mounted to housing **20** (see Figure 8) and secures the opposite end of spring **96**. Spring **96** extends spirally around sleeves **58**.

It should be noted that while one particular piston cylinder assembly has been described, a plurality of such identical assemblies or similar assemblies can be used without departing from the spirit of the invention. There are two in the preferred embodiment. In essence, the preferred embodiment illustrates the preferred way to accomplish a desired movement which is responsive to a particular signal for remote release of the ball or plug.

The first port **82** has a line **100** leading to a check valve **102** and a commercially available, intrinsically safe solenoid valve **104** mounted in parallel (see Figure 3). The use of check valve **102** is optional. Coming out of solenoid valve **104** is line **106** which leads back to second port **86**. Cavities **84** and **88**, as well as lines **100** and **106** are filled with an incompressible fluid. Solenoid valve **104** is electrically operated and is of the type well-known in the art to be intrinsically safe. This means that it operates on such low voltage or current that it will not induce any sparks which could cause a fire or explosion. The electrical components for the apparatus **A** of the present invention are located in compartment **108** of housing **20** (see Figure 8). A sensor **110** (see Figures 3 and 8) is mounted in each of bores **112** in housing **20**. Each of the sensors **110** is connected to the electronic control system **114**. The power for the electronic control system **114** comes from a battery **116**. Sensor **110** receives over the air a signal **118** from a control **120**. In the preferred embodiment, the drilling rig operator holds the control **120** in his hand and points it in the direction of sensors **110**, which are distributed around the periphery of housing **20** and oriented in a downward direction.

The preferred embodiment has six sensors **110**. The rig operator points the control **120**, which is itself an intrinsically safe device, which emits a signal **118** that ultimately makes contact over the air with one of sensors **110**. The signal can be infrared or laser or any other type of signal that goes over the air and does not create any explosive fire or other hazards on the rig. The effect of a signal **118** received at a sensor **110** is to actuate the control system **114** to open solenoid valve **104**.

However, prior to explaining the actuation of the release, the initial set-up of the apparatus **A** needs to be further explained. As previously stated, pin **42** is installed in a position which is the fully released position. That position is, in effect, about 180° different from the orientation shown in Figures 2A and 2B. With that initial installation, gear **54** is secured to rack **62**. At that point in time, the cylinder **72** is disposed in the position shown in Figure 4, with the spring **96** fully relaxed except for any preload, if built in. When handle **52** is given a 180° rotation, it moves rack **62**, which is connected to sleeves **58** as are lugs **66**. Accordingly, 180° rotation of handle **52** has the net effect of rotating lugs **66** away from bracket or brackets **98** about 30° - 45°. The difference in position of lugs **66** with respect to bracket **98** is seen by comparing Figures 3 and 4.

As a result of the 180° rotation of handle **52**, pin **42** is now in the position shown in Figures 2A and 2B. By moving lugs **66** away from bracket **98**, spring **96** has been stretched. In order to accommodate the rotational movement induced by handle **52**, piston **70** must move to a position where it is more extended out of cylinder **72**. In making this movement, cavity **88** must grow in volume while cavity **84** shrinks in volume. As a result, there is a net transfer of fluid, which could be oil or some other hydraulic fluid, through conduit **100** as cavity **84** is reduced in volume, through check valve **102**, if used, and back into conduit **106** to flow into cavity **88** which is increasing in volume. During this time, of course, floating piston **76** experiences insignificant net differential pressure and merely moves to accommodate the change in volume of cavity **84**. It should be noted that if check valve **102** is not used, the operator must use control **120** to trigger valve **104** to open prior to rotating handle **52**. This is because without check valve **102**, if valve **104** remains closed, it will not be possible to turn handle **52** because the rack **62** will not be free to move because piston **70** will be fluid-locked against movement into or out of cylinder **72**.

Therefore, if an assembly is used without check valve **102**, the operator must ensure that valve **104** stays open as the orientation is changed from that shown in Figure 4 to that shown in Figure 3. In the preferred embodiment, a timer can be placed on valve **104** so that when it is triggered to open by control **120**, it stays open for a predetermined time (about 4 minutes), thus giving the components time to make their required movements, both in the set-up and the release modes.

The result of the initial rotation of handle **52** about 180° in the preferred embodiment is that pin **42** suspends sleeve **8**, which keeps plug stop **10** supporting the ball or plug **122** (see Figure 7).

When it is time to release the ball or plug **122**, the operator, standing in a safe location on the rig floor, aims the control **120** toward sensors **110**. Having made contact over the air with a signal **118** transmitted from control **120** to one of the sensors **110**, the control system **114** is actuated to open valve **104**. When valve **104** is opened, the force in expanded spring **96** draws lugs **66** rotationally toward bracket **98**. This is allowed to happen as fluid is displaced from cavity **84** through line **100** through valve **104** back through line **106** to cavity **88**. As lug **66** rotates due to the spring force which is now no longer opposed by the hydraulic lock provided by having valve **104** in the closed position, the rotation of sleeve **58** rotates rack **62**, which in turn rotates gear **54**, which in turn rotates pin **42** from the position shown in Figures 2A and 2B approximately 180°. This results in the release of sleeve **8** so that it can shift downwardly as previously explained. The downward shifting of sleeve **8** allows plug stop **10** to pivot on roll pin **11**, thus removing the support for the ball or plug **122**. The ball or plug **122** can drop. Its downward progress toward the liner being cemented can also be assisted by pumping down on

top of the plug due to passage **13** being cut off upon shifting of sleeve **8**, as in the original design shown in Figure 1.

It should be noted that the housings **20** can be stacked in series, each equipped with sensors **110** that respond to different signals so that if there is a stack of housings **20** in use for a particular application requiring several plugs to be dropped, the sensitivity of sensors **110** on different housings **20** to different signals ensures that the plugs are dropped in the proper order. Accordingly, a separate controller **120** is provided for each apparatus **A** to be used in series, and aiming one controller with a discrete signal to a sensor **110** will not actuate the apparatus **A** unless the specific signal that sensor **110** is looking for is received. Alternatively, a single controller **120** can be programmed to give different signals **118** in series to accomplish release in the proper sequence.

The control **120** is further illustrated in Figure 9. Control **120** comprises a hand-held transmitter having several components. The transmitter includes a tone generator **101**, which generates a multiplicity of frequencies. In the preferred embodiment, the tone generator **101** generates 5 frequencies comprising 150 Hz, 300 Hz, 600 Hz, 1200 Hz, and 2400 Hz. Additionally, the tone generator **101** creates a carrier frequency of 38 kHz. The frequencies generated by the tone generator **101**, except for the carrier frequency, are passed through a microsequencer **103**, and ultimately to a mixer **105** where the carrier signal is mixed with the other frequencies generated. The mixed signal is then passed to an amplifier or power driver **107** for ultimate reception at sensors **110** (see Figure 10). As can be seen from the table which is part of Figure 9, a four-button selector is provided on the transmitter control **120**. The first frequency sent, regardless of the combination selected, is 150 Hz, and the last signal sent is 2400 Hz. It should be noted that selecting different signal combinations on the control **120** will result in actuation of a different ball or plug **122** in an assembly involving a stack of units.

Referring now to Figure 10, any one of the sensors **110** can pick up the transmitted signal and deliver it to the pre-amp and demodulator **109**. The

carrier frequency of 38 kHz is eliminated in the pre-amp and demodulator, and the individual frequency signals sent are sensed by the various tone decoders **111**. Each of the tone decoders **111** are sensitive to a different frequency. When the tone decoder for the 150 Hz detects that frequency, it resets all of the latches **113**. The latches **113** emit a binary output dependent upon the input from the tone decoders **113**. When the last frequency is detected, that being the 2400 Hz frequency at the decoder **111**, the latch **113** associated with the decoder for the 2400 Hz frequency enables the decoder **115** to accept the input from the remaining latches **113** to generate a suitable output which will ultimately trigger valve **104** to open. Again, depending on the binary input to the decoder **115**, discrete signals result as the output from decoder **115**, which result in a signal transmitted to one shot **117**, shown in Figure 11. The one shot **117** triggers a timer **119**, which in the preferred embodiment is set for keeping the valve **104** in the open position for 4 minutes. The signal to timer **119** also passes to solenoid driver **121**, which is a switch that enables the solenoid **123** to ultimately open valve **104**. As a safety precaution to avoid release of any ball or plug **122** if the power supply becomes weak or is otherwise interrupted, there is a power on/off detector **125**, which is coupled to a delay **127**. If the available power goes below a predetermined point, the solenoid **123** is disabled from opening. Thereafter, if the power returns above a preset value, the requirements of time in delay **127** must be met, coupled with a subsequent signal to actuate solenoid **123**, before it can be operated. The power supply to the control circuits is provided by a plurality of batteries that are hooked up in parallel. These batteries are rechargeable and are generally recharged prior to use of the assembly on each job. The batteries singly are expected to have sufficient power to conclude the desired operations.

In another safety feature of the apparatus, in making the initial rotation of handle **52** to set the apparatus **A** up for release, if for any time during the rotation of handle **52** it is released, check valve **102** will prevent its slamming back to its original position due to spring **96**, which could cause

injury to personnel. By use of check valve **102**, the initial movement of handle **52** is ensured to be unidirectional so that it holds its ultimate position when released simply because the fluid in the circuit in lines **100** and **106** cannot flow from conduit **106** back to conduit **100** with check valve **102** installed and solenoid valve **104** closed.

It should be noted that the preferred embodiment having been illustrated, the scope of the invention is broad enough to encompass alternative mechanisms for creating the necessary motion to release a ball or plug **122** by virtue of a remote, over-the-air signal.

The foregoing disclosure and description of the invention are illustrative and explanatory thereof, and various changes in the size, shape and materials, as well as in the details of the illustrated construction, may be made without departing from the spirit of the invention.

What is claimed is:

1. A control apparatus for a single or multiple plug-dropping tool, comprising:

at least one signal transmitter for sending at least one signal over the air;

at least one signal receiver for receiving said signal from said transmitter and to provide an output;

at least one control system comprising a primary control element; and

at least one signal processor to use said output from said receiver to selectively remotely operate said control element to allow release of a plug from the apparatus by said control system.

2. The apparatus of claim 1, further comprising:

at least one final control element, said final control element selectively preventing and allowing a plug to drop from the apparatus, whereupon actuation of said primary control element selectively permits actuation of said final control element to drop said plug.

3. The apparatus of claim 2, wherein said control system further comprises:

a selectively releasable potential energy storage mechanism; and

a force transfer mechanism connected to said potential energy storage mechanism and said final control element.

4. The apparatus of claim 3, wherein:

set and release of said potential energy storage mechanism is controlled by movement of said force transfer mechanism.

5. The apparatus of claim 4, wherein:

said force transfer mechanism comprises a piston and cylinder combination;

said piston forming a first and second variable-volume cavity within

said cylinder; and

a fluid circuit connecting said first and second variable-volume cavities;

said primary control element comprising a valve mounted in said fluid circuit.

6. The apparatus of claim *5*, wherein:

said first and second cavities have volumes that vary inversely with movement of said piston;

said potential energy storage mechanism is operably connected to said piston and cylinder combination;

said valve selectively fluid locking said piston with respect to said cylinder for securing said potential energy storage mechanism in a set position wherein a force is stored;

said valve, when selectively opened, fluid unlocking said piston for movement with respect to said cylinder; and

whereupon said fluid unlocking of said piston allows said potential energy storage mechanism to apply said stored force to said piston cylinder combination, which in turn actuates said final control element to drop said plug.

7. The apparatus of claim 6, further comprising:

a rack operably connected to said piston and cylinder combination;

said final control element further comprising:

a pin;

a gear mounted to said pin, said gear selectively positionable in meshing contact with said rack; and

an operator mounted to said pin;

said potential energy storage mechanism further comprising:

a spring ftxedly mounted on one end and connected to said piston and cylinder combination;

said spring settable to store a force by virtue of operation of said operator which, through said gear, rotates said rack in a first direction when said

fluid circuit permits flow in at least one direction;

said spring being retained by selective operation of said valve to stop flow in said fluid circuit;

whereupon selective opening of said valve allows said rack to drive said gear in a second direction opposite said first direction for release of the plug by rotation of said pin.

8. The apparatus of claim 7, further comprising:

a check valve in parallel with said valve in said fluid circuit to permit one-way flow in said fluid circuit to allow said rack to rotate in said first direction for setting a stored force in said spring;

said valve operable to facilitate flow in said fluid circuit in a reverse direction for transmitting said stored force to said pin via said rack and gear.

9. The apparatus of claim 8, wherein:

said cylinder has one open end;

one of said variable-volume cavities is disposed adjacent said open end; and

a floating piston is disposed between said piston and said cylinder adjacent said open end and movable relative to movements of said piston for dynamically sealing off said variable-volume cavity most adjacent to said open end.

10. The apparatus of any one of claims 1 to 9, further comprising:

a plurality of signal receivers disposed around the periphery of the apparatus for allowing said signal transmitter to effect dropping the plug while the apparatus is moving, said moving including at least one of rotating and reciprocating.

11. The apparatus of any one of claims 1 to 9, wherein:

said at least one signal transmitter sends a plurality of different signals;

a plurality of assemblies of said signal receivers, processors and primary control elements, each disposed on different parts of a multi-plug-dropping tool;

each of said signal receivers being responsive to a discrete different signal from said transmitter for selective orderly dropping of a plurality of plugs into a wellbore.

12. The apparatus of any one of claims 1 to 9 wherein:

said transmitter sends an infrared signal; and

at least one of said transmitter, receiver and signal processor is built to be intrinsically safe.

13. A plug-dropping apparatus for downhole use, comprising:

at least one housing;

at least one plug selectively supportable within said housing;

at least one plug stop assembly selectively operable to hold and release said plug;

at least one signal transmitter;

at least one signal receiver on said housing for receiving over the air at least one signal from said transmitter; and

at least one control system, said control system receiving an output from said signal receiver and in response thereto actuating said plug stop to release said plug.

14. The apparatus of claim 13, further comprising:

a plurality of receivers distributed about said housing in a generally downward orientation;

whereupon said signal transmitter, operated from a safe location below said receivers, can direct said signal to at least one of said receivers as said housing moves, movement of said housing including at least one of rotation and reciprocation.

15. The apparatus of claim 14, further comprising:

a plurality of housings, each selectively retaining a plug and each equipped with at least one signal receiver and control system;

said receivers on each of said housings being responsive to different

signals from said transmitter to accomplish orderly release of said plugs from the lowermost housing to the uppermost.

16. The apparatus of claim 15, wherein said control system further comprises:

a biasing element;

at least one linkage operably connecting said biasing element to said plug stop assembly; and

at least one lock mechanism mounted to said linkage for allowing selective movement thereof;

said lock mechanism being operable to lock in a force into said biasing element and to selectively release said force so it can be transferred through said linkage to said plug stop assembly for release of said plug.

17. The apparatus of claim 16, wherein:

said lock mechanism comprises a variable length link in said linkage.

18. The apparatus of claim 17, wherein said variable length link comprises:

a piston and cylinder combination;

said piston being selectively lockable by fluid force; and

a fluid circuit in communication with said cylinder on opposed sides of said piston;

said control system further comprises:

a valve in said fluid circuit, said valve selectively operable to create a locking fluid force preventing piston movement and to release said locking force responsive to a signal from said transmitter.

19. The apparatus of claim 18, wherein

said linkage comprises a rack;

said plug stop assembly comprises a pin;

said pin being disposed in said housing to selectively retain said plug

and release it upon rotation;

a pinion gear operably connected to said pin and said rack;

said biasing element primed to store a force and said pin positioned to retain said plug by initial rotation of said pin in a first direction with said valve open, said stored force released by actuation of said transmitter to open said valve, which in turn transmits said stored force through said linkage to turn said pin in a second direction opposite said first direction for release of said plug.

20. The apparatus of claim 19, wherein:

said transmitter sends an infrared signal;

at least one of said transmitter, receiver, and control system comprises intrinsically safe electrical components; and

said valve comprises a solenoid in said fluid circuit.

21. The apparatus of claim 20, further comprising:

a plurality of said receivers distributed about said housing in a generally downward orientation;

whereupon said signal transmitter, operated from a safe location below said receivers, can direct said signal to at least one of said receivers as said housing moves, movement of said housing including at least one of rotation and translation.

22. The apparatus of claim 21, further comprising:

a plurality of housings, each selectively retaining a plug and each equipped with at least one signal receiver and control system;

said receivers on each of said housings being responsive to different signals from said transmitter to accomplish orderly release of said plugs from the lowermost housing to the uppermost.

23. A method of releasing balls or plugs for liner cementing, comprising the steps of:

erecting a remotely mounted apparatus to drop balls or plugs on a casing or liner string;

transmitting a signal over the air from a safe location to the remotely mounted apparatus;

receiving said over-the-air signal at the apparatus; and

using the signal received to trigger release of at least one ball or plug.

24. The method of claim 23, further comprising the steps of:

providing a plurality of receivers on the apparatus;

moving the apparatus as at least one of said receivers gets the signal to trigger said release, said moving including at least one rotating and reciprocating.

25. The method of claim 24, further comprising the steps of:

stacking a plurality of apparatuses in series;

transmitting a plurality of signals; and

making a receiver in each apparatus responsive to a different signal for orderly release of balls or plugs.

26. The method of claim 25, further comprising the steps of:

storing a force in a biasing device in said apparatus;

connecting the biasing device to a linkage;

connecting the linkage to a plug support assembly;

releasing said stored force; and

using said released force to operate said plug support through said linkage.

27. The method of claim 26, further comprising the steps of:

priming said biasing device by moving said plug support assembly;

selectively fluid locking said linkage lock;

trapping a stored force in said biasing device with said locking;

using said transmitted signal to operate a valve for a subsequent unlocking; and

releasing the ball or plug by said subsequent unlocking.

28. The apparatus of claim 11, wherein:

said transmitter sends a plurality of frequencies spaced in time;

at least one of said frequencies serving a dual purpose of being first a part of a received signal sent to said processor to allow said processor to issue an output signal to operate said primary control element, and second to act as a cue to said processor that an incoming multiple frequency signal has begun or has concluded.

29. The apparatus of claim 11, wherein:

said transmitter sends a plurality of frequencies; and

said processor discriminates for said frequencies and generates an output signal to said primary control element based on the order of frequencies received.

30. The apparatus of claim 28, wherein:

at least a first and second frequency serve a dual purpose and are part of a sequence of signals that triggers an output from said processor;

said first frequency is first in time and cues said processor that a multifrequency signal is arriving, said second frequency is last in time and cues said processor that the multifrequency signal is fully transmitted, thus triggering said processor to issue an output signal for actuation of said primary control element.

31. The apparatus of claim 30, wherein:

said receiver further comprises a self-contained power supply; and

interlock means on said power supply to prevent actuation of said primary control element unless a preset value of power exists for a preset time.

32. A plug-dropping apparatus for displacement of a material downhole during the well drilling and completion operations by personnel working on a rig, comprising:

at least one housing;

at least one plug selectively supportable within said housing;

at least one plug stop assembly on said housing selectively operable to hold and release said plug;

at least one signal transmitter operable adjacent the rig and remotely from said housing;

at least one signal receiver on said housing for receiving over the air at least one signal from said transmitter; and

at least one control system positioned at least in part in said housing, said control system receiving an output from said signal receiver and in response thereto actuating said plug stop to release said plug.

33. The apparatus of claim 32, further comprising:

a plurality of receivers distributed about said housing in an orientation towards said signal transmitter;

whereupon said signal transmitter, operated from a safe location away from said receivers, can direct said over-the-air signal to at least one of said receivers despite the possibility that said housing may be moved as said signal is transmitted by said transmitter toward said at least one of said receivers, movement of said housing including at least one of rotation and reciprocation.

34. The apparatus of claim 33, further comprising:

a plurality of stacked housings, each selectively retaining a plug and each equipped with at least one signal receiver and control system;

said receivers on each of said housings being responsive to different signals from said transmitter to accomplish orderly release of said plugs from the housing closest to the rig to the housing furthest from the rig.

35. The apparatus of claim 32, wherein said control system comprises:

a biasing element;

at least one linkage linking said biasing element to said plug stop assembly; and

at least one lock mechanism operated by said control system to

selectively lock said linkage for prevention of movement thereof;

said biasing element applying a force on said linkage when said linkage is locked in position by said lock mechanism, whereupon release of said lock mechanism by operation of said control system, said biasing element forces said linkage to move said plug stop assembly for release of said plug.

36. The apparatus of claim 35, wherein:

said lock mechanism comprises a variable length link in said linkage.

37. The apparatus of claim 36, wherein said variable length link comprises:

a piston and cylinder combination;

said piston being selectively lockable; and

a pressurized fluid control circuit in communication with said cylinder on opposed sides of said piston;

said control system further comprises:

a valve in said pressurized fluid control circuit responsive to said control system, said valve selectively operable by action of said control system into a first position to lock said piston against movement by preventing flow in said fluid control circuit and a second position where fluid flow is possible, allowing said piston to move in said cylinder.

38. The apparatus of claim 37, wherein:

said linkage comprises a rack;

said plug stop assembly comprises a pin;

said pin selectively retains said plug and releases it upon rotation of said pin;

a pinion gear connected to said pin and said rack;

whereupon said piston is movable, with said valve in said second position, to allow said pin to be turned to a first position where said pin is selectively locked by thereafter moving said valve back to its said first position, said biasing element rotating said pin from said first to said second position, responsive to a

subsequent operation of said valve back to its second position, to release said plug.

39. The apparatus of claim 38, wherein:

said transmitter sends an infrared signal;

at least one of said transmitter, receiver, and control system comprises intrinsically safe electrical components; and

said valve in said pressurized fluid control circuit is actuated by a solenoid.

40. The apparatus of claim 39, further comprising:

a plurality of receivers distributed about said housing in an orientation towards said signal transmitter;

whereupon said signal transmitter, operated from a safe location below said receivers, can direct said signal to at least one of said receivers as said housing is moved, movement of said housing including one or rotation an translation.

41. The apparatus of claim 40, further comprising:

a plurality of stacked housings, each selectively retaining a plug and each equipped with at least one signal receiver and control system;

said receivers on each of said housings being responsive to different signals from said transmitter to accomplish orderly release of said plugs from the housing closest to the rig to the housing furthest from the rig.

42. A method of releasing balls or plugs for liner cementing using a rig, comprising the steps of:

erecting a remotely mounted apparatus to remotely drop at least one ball or plug on a casing or liner string;

electronically transmitting at least one signal over the air from a safe location adjacent the rig to the remotely mounted apparatus;

electronically sensing said over-the-air signal at the apparatus; and

using the signal received to trigger release of at least one ball or plug.

43. The method of claim 42, further comprising the steps of:

providing a plurality of receivers on the apparatus; and

moving the apparatus as at least one of said receivers gets the signal to trigger said release, said moving including at least one of rotation and reciprocating.

44. The method of claim 43, further comprising the steps of:

stacking a plurality of said apparatuses;

transmitting a plurality of said signals; and

making a receiver in each apparatus responsive to a different signal for orderly release of the balls or plugs.

45. The method of claim 44, further comprising the steps of:

connecting a biasing device to a linkage;

connecting the linkage to a plug support assembly;

allowing the biasing device to move said linkage; and

operating said plug support assembly to release said ball or plug by virtue of said movement of said linkage.

46. The method of claim 45, further comprising the steps of:

placing the plug support assembly in a first position where it will support a ball or plug;

creating a restorative force from said biasing device through said linkage on said plug support assembly, resulting from said placing step;

locking said linkage with said plug support assembly supporting said plug or ball and said restorative force applied to said linkage;

using at least one of said electronically sensed signals to unlock said linkage; and

releasing said ball or plug by using said restorative force to move said plug support assembly.

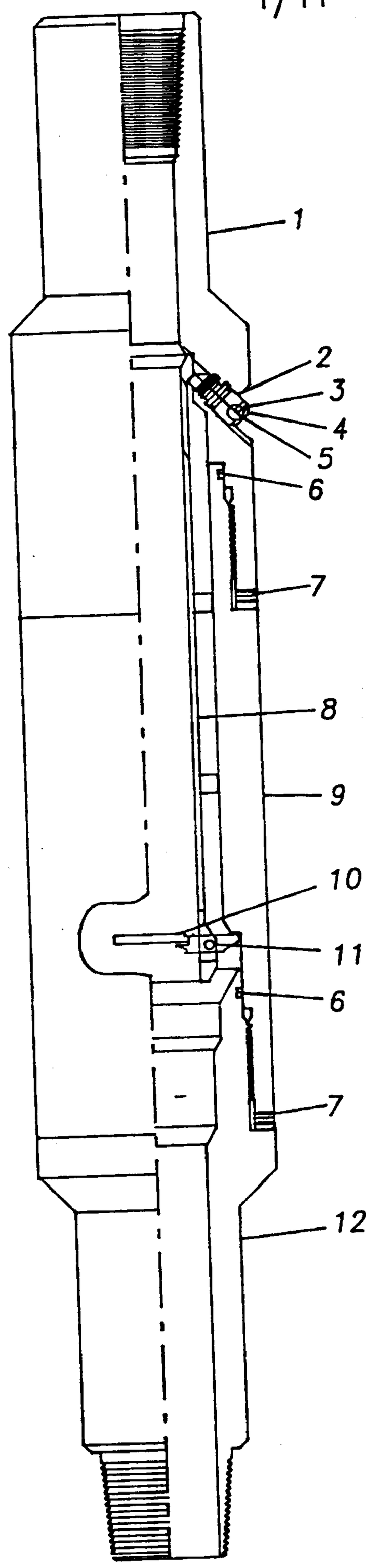

FIG. 1
(Prior Art)

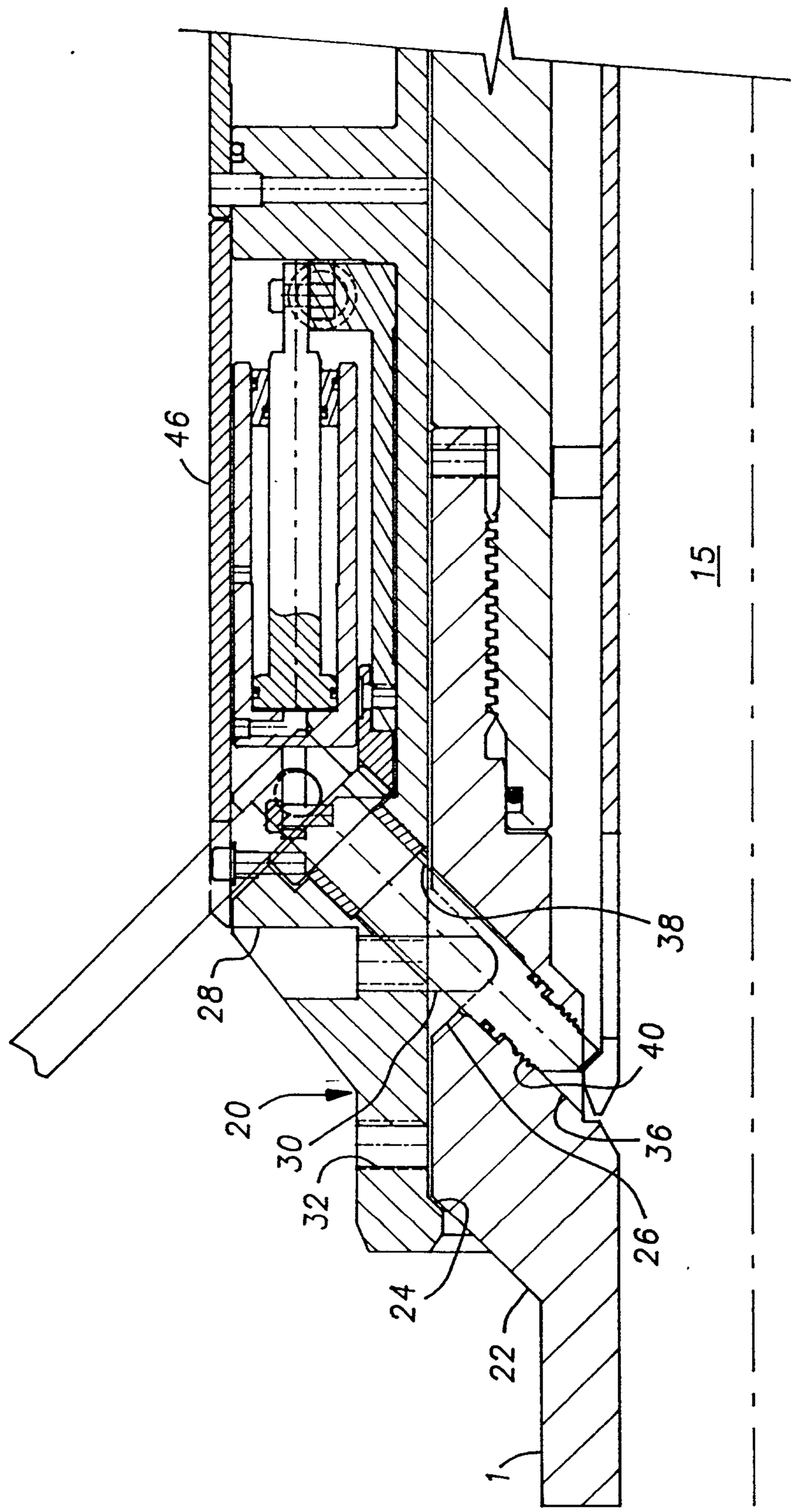

FIG. 2A

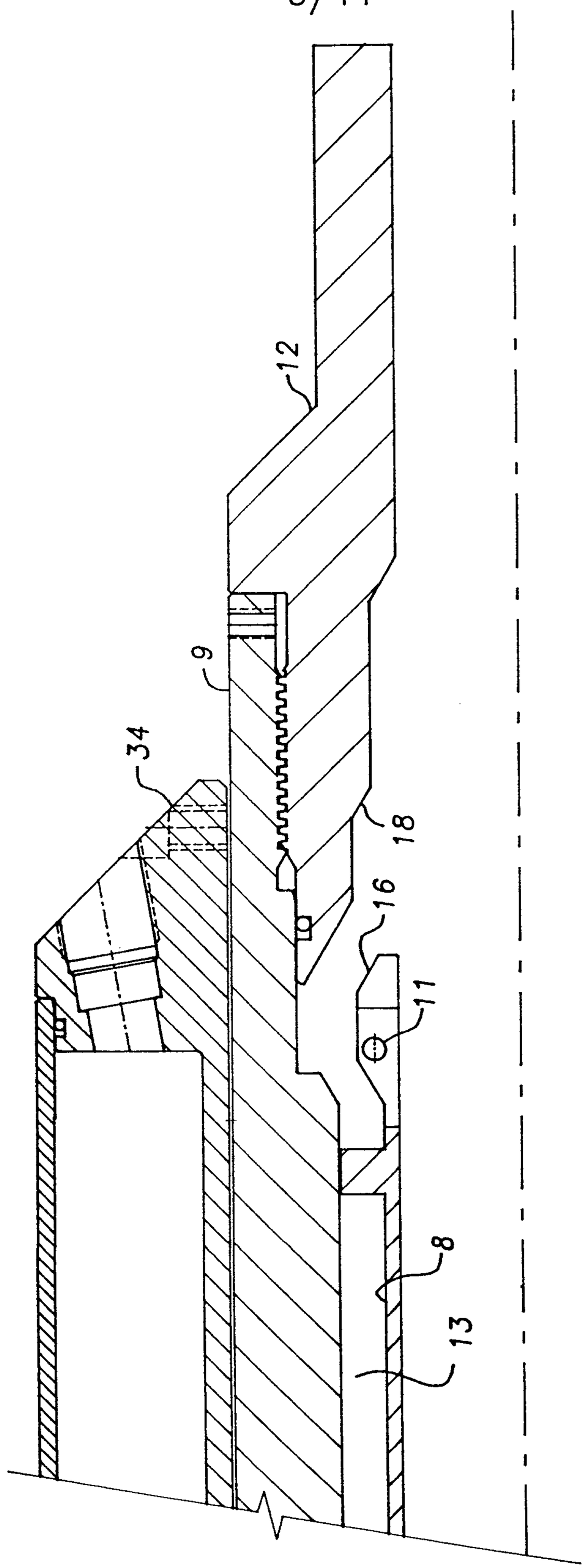

FIG. 2B

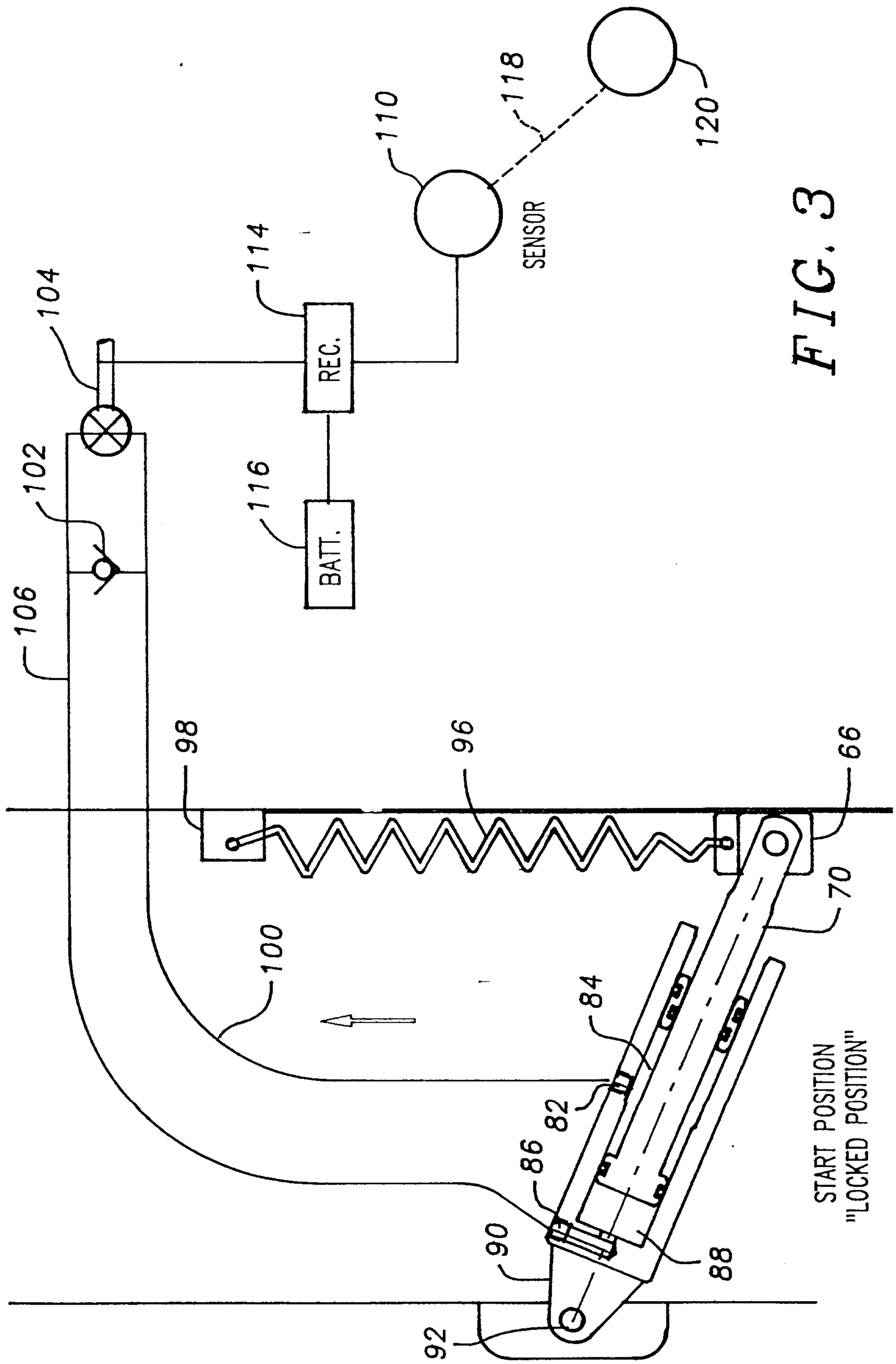
104
102
106
98
96
66
70
100
84
82
86
90
92
88
START POSITION
"LOCKED POSITION"
114
REC.
116
BATT.
110
SENSOR
118
120

FIG. 3

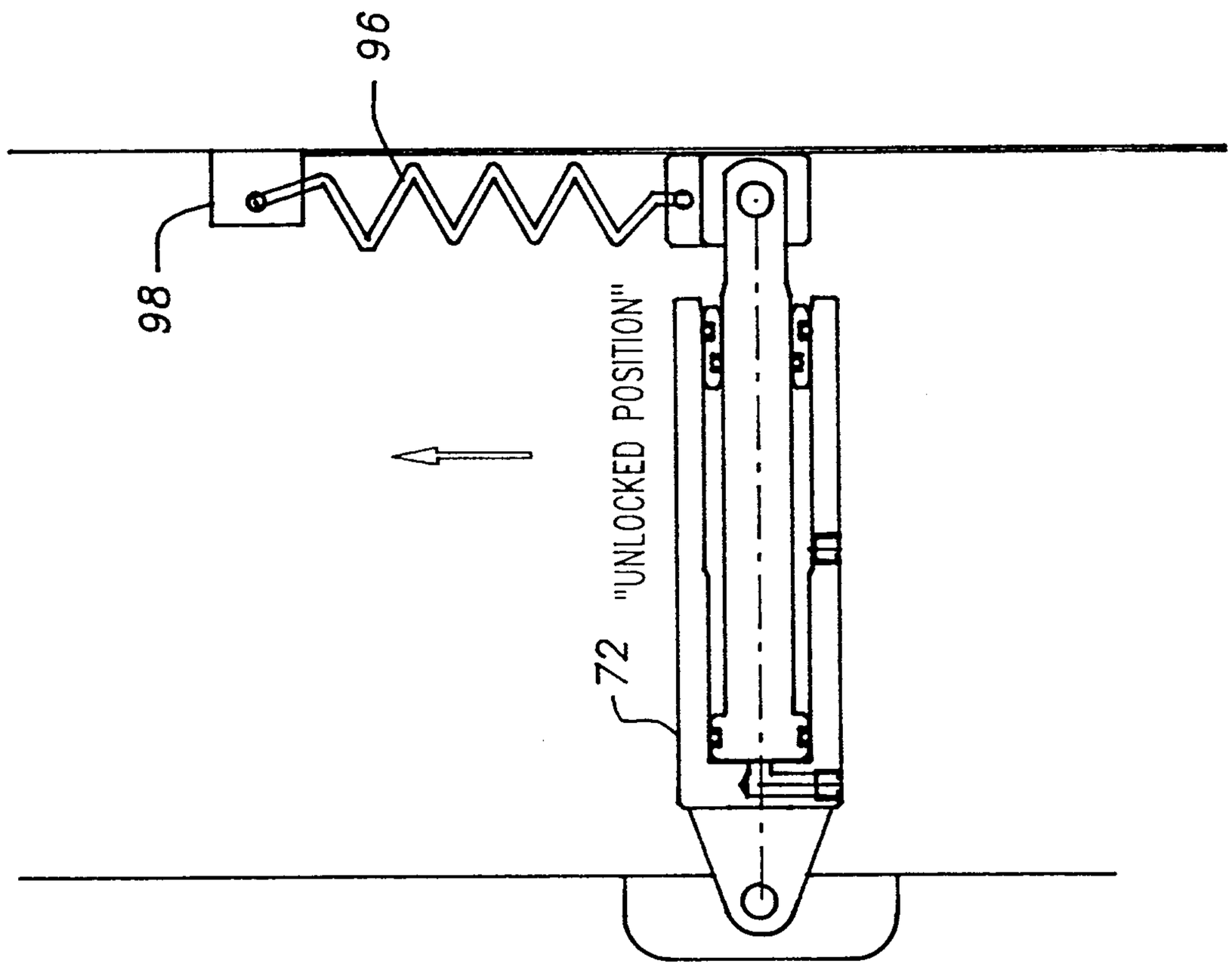

FIG. 4

FIG. 5

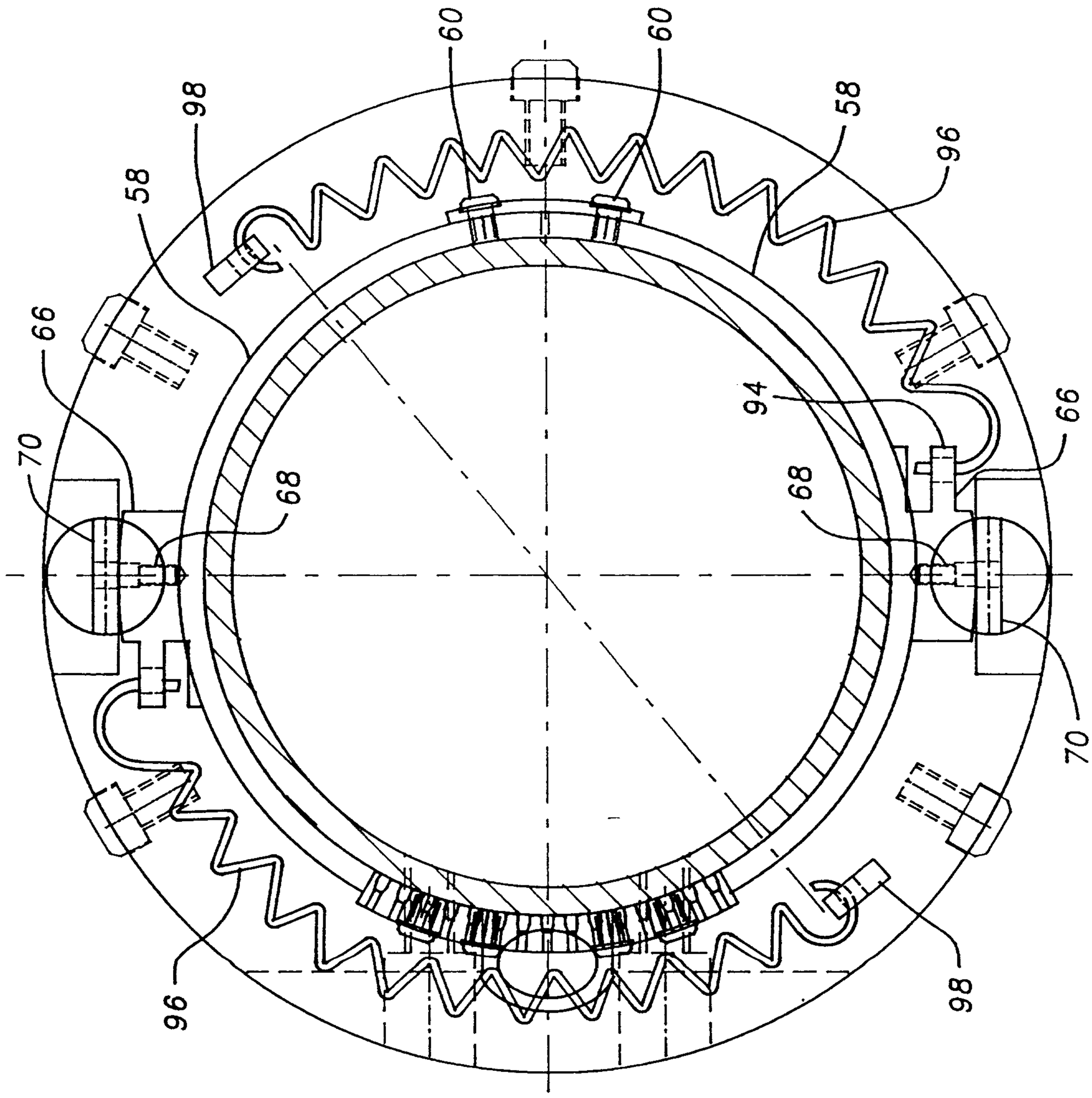

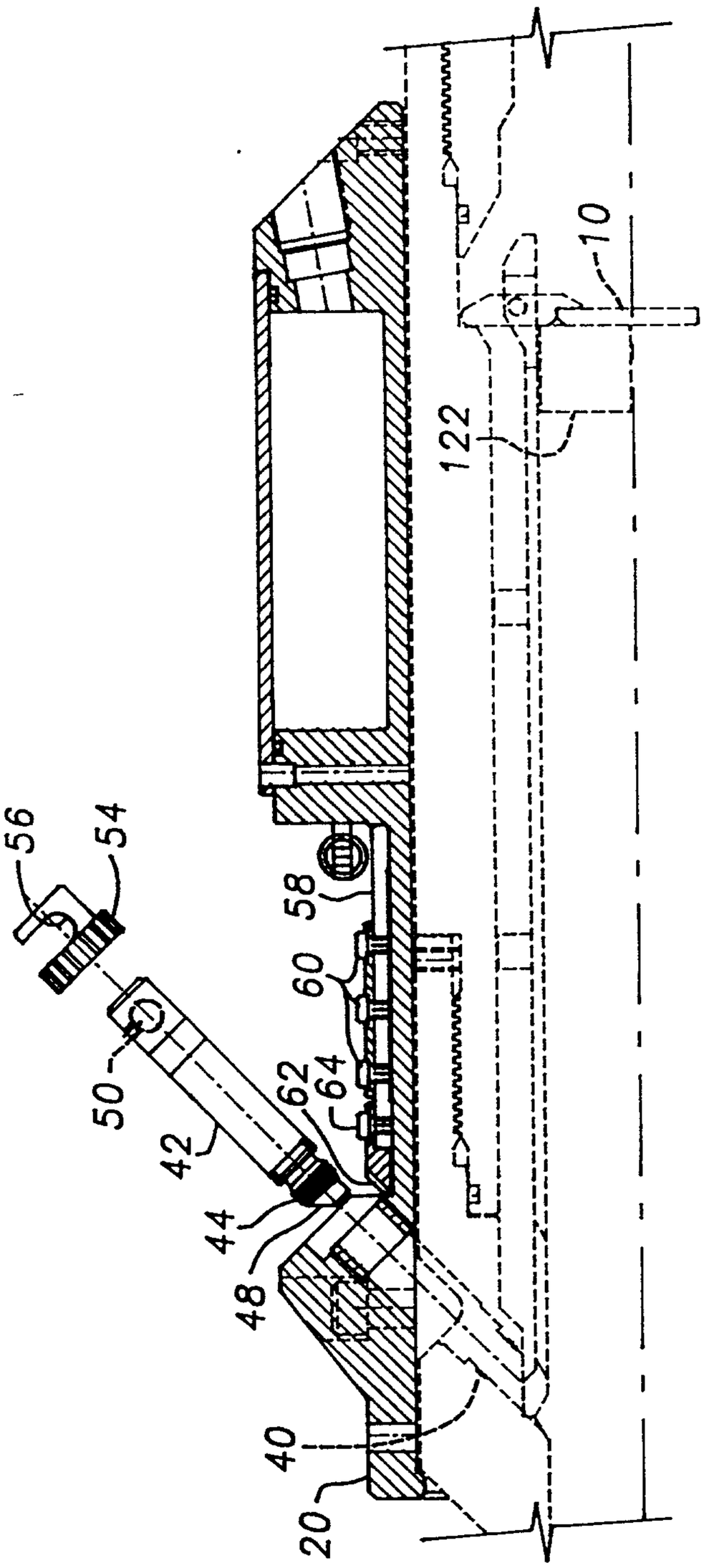

FIG. 7

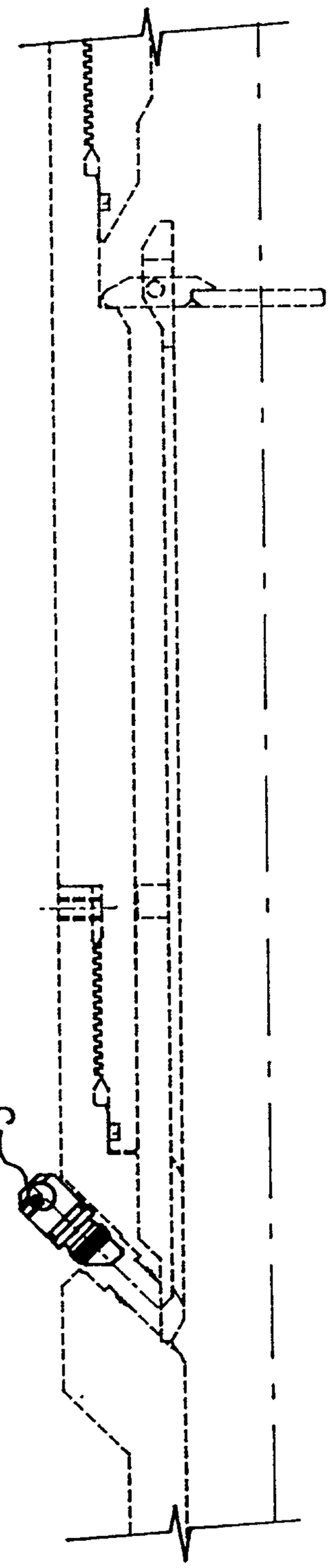

FIG. 6

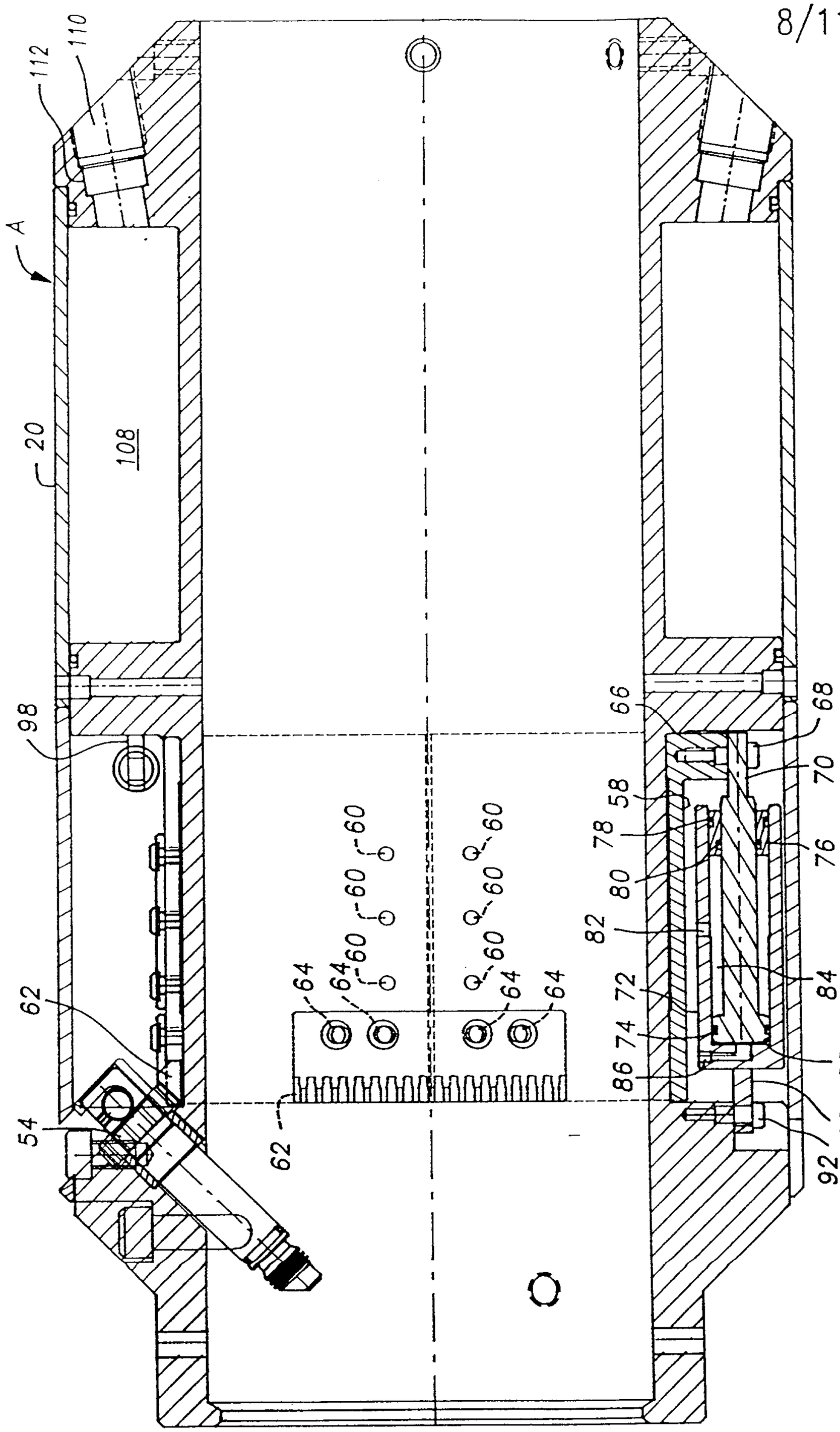
112
110
A
20
108
98
62
54
60
64
66
68
70
58
78
76
80
82
84
72
74
86
88
90
92

FIG. 8

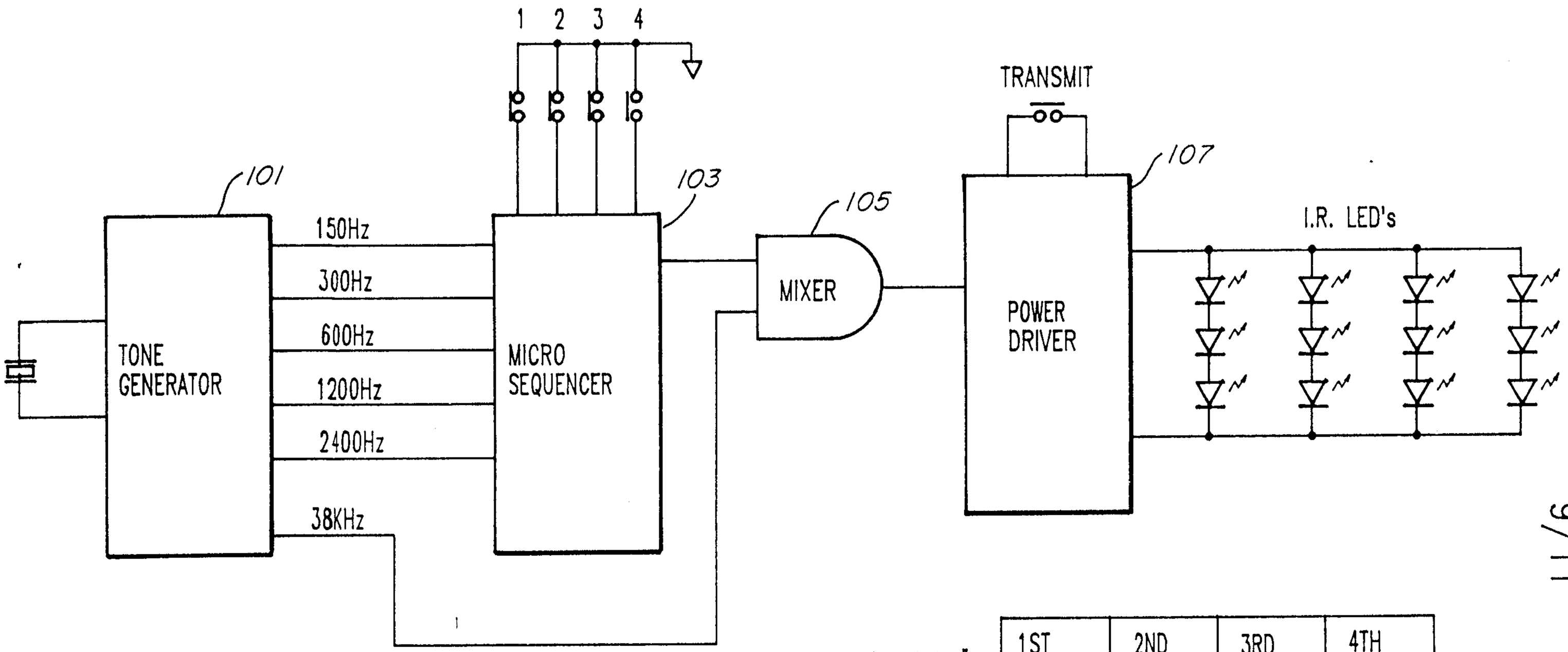

SUB #	1ST FREQ.	2ND FREQ.	3RD FREQ.	4TH FREQ.
1	150	300	1200	2400
2	150	600	1200	2400
3	150	300	600	2400
4	150	600	----	2400

I.R. TRANSMITTER

FIG. 9

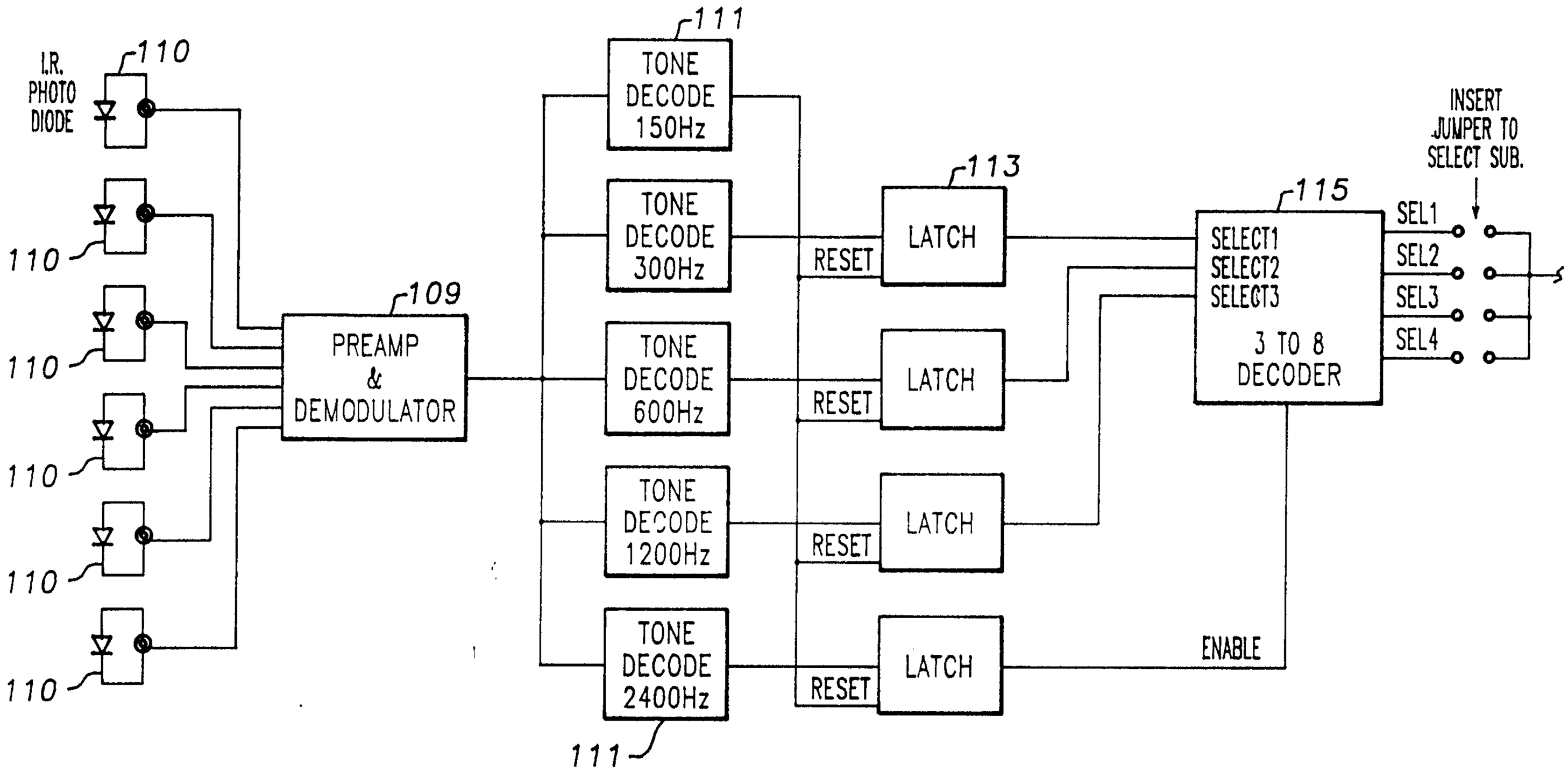

I.R. RECEIVER

FIG. 10

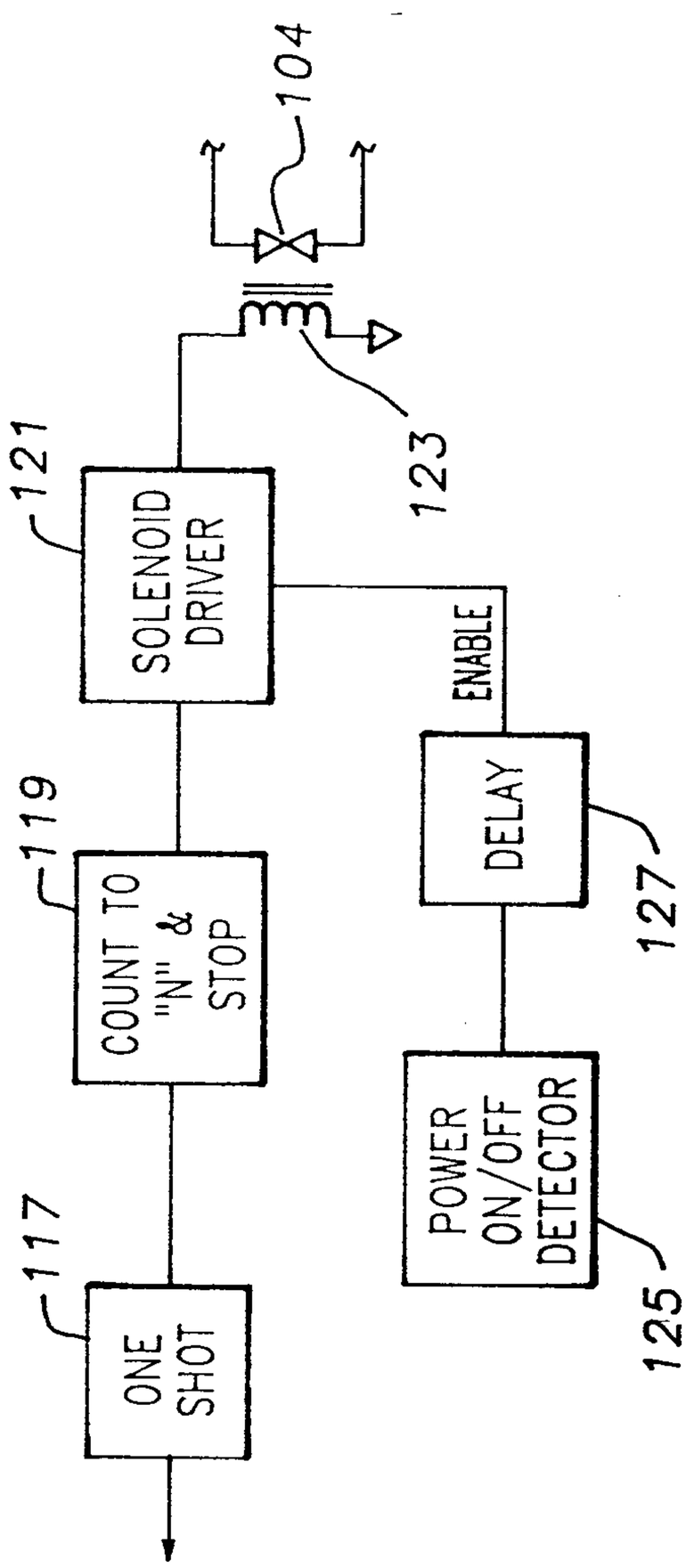
104
123
121
SOLENOID DRIVER
ENABLE
119
COUNT TO "N" & STOP
DELAY
127
117
ONE SHOT
POWER ON/OFF DETECTOR
125

FIG. 11

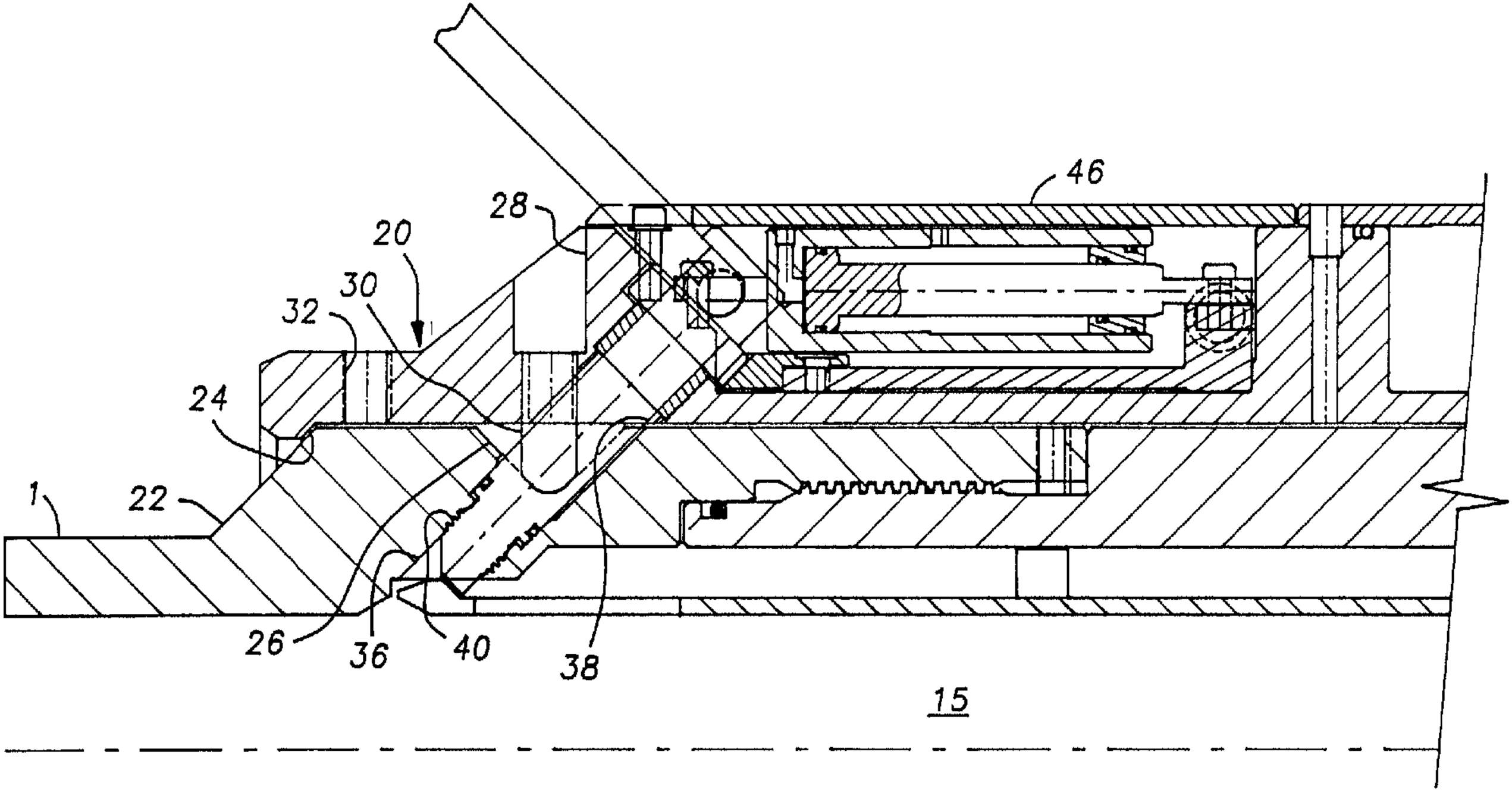
46
28
20
30
32
24
1
22
26
36
40
38
15