US 20050165419A1

(19) United States

(12) Patent Application Publication (10) Pub. No.: US 2005/0165419 A1

Sauer et al. (43) Pub. Date: Jul. 28, 2005

(54) SYSTEM FOR ENDOSCOPIC SUTURING

(76) Inventors: **Jude S. Sauer**, Pittsford, NY (US); **Michael W. Fitzsimmons**, Rochester, NY (US); **Mark A. Bovard**, Pittsford, NY (US)

Correspondence Address:
KENNETH J. LUKACHER
3136 WINTON ROAD SOUTH, SUITE 204
ROCHESTER, NY 14623 (US)

(21) Appl. No.: **11/085,703**

(22) Filed: **Mar. 21, 2005**

Related U.S. Application Data

(62) Division of application No. 09/776,431, filed on Feb. 2, 2001.

Publication Classification

(51) **Int. Cl.**[7] **A61B 17/04**
(52) **U.S. Cl.** **606/148**

(57) **ABSTRACT**

A system for endoscopic suturing is provided having an endoscope, such as a gastroscope, with a distal end locatable in the body of a patient and a flexible shaft extending to the distal end, a flexible accessory tube coupled to the endoscope to be movable relative to the endoscope's shaft, and a tip coupled to the shaft of the endoscope having an opening through which one end of the accessory tube is received. A tissue suturing instrument is provided having a partially flexible shaft locatable through the accessory tube, and a tissue engaging end coupled to the shaft. The tissue engaging end has a vacuum sleeve enabling suction to be selectably applied at the tissue engaging end to capture tissue through an opening in the vacuum sleeve. Two needles are provided which extend through the shaft of the suturing instrument. Each needle is separately actuated into a gap in the instrument's tip, through tissue suctioned into the opening of the vacuum sleeve and into a ferrule at each end of a loop of suture. The system further includes a suture securing instrument having a partially flexible shaft locatable through the accessory tube, and a distal end coupled to the shaft. After removal of the suturing instrument from the accessory tube, a loop of suture extends through the tissue and the accessory tube, the suture securing instrument receives the free ends of the loop of suture at its distal end through a sleeve member, and the suture securing instrument is then inserted through the accessory tube to the location of the suture in the tissue. The suture securing instrument crimps the sleeve member and cuts the free ends of the suture to secure the suture closed. The suturing instrument and suture securing instrument are passed through the accessory tube without removal of the endoscope from the patient. The endoscope provides viewing by an operator of the engaging end of the suturing instrument for selecting placement of the suture through tissue, and of the distal end of the suture securing instrument to secure the suture closed.

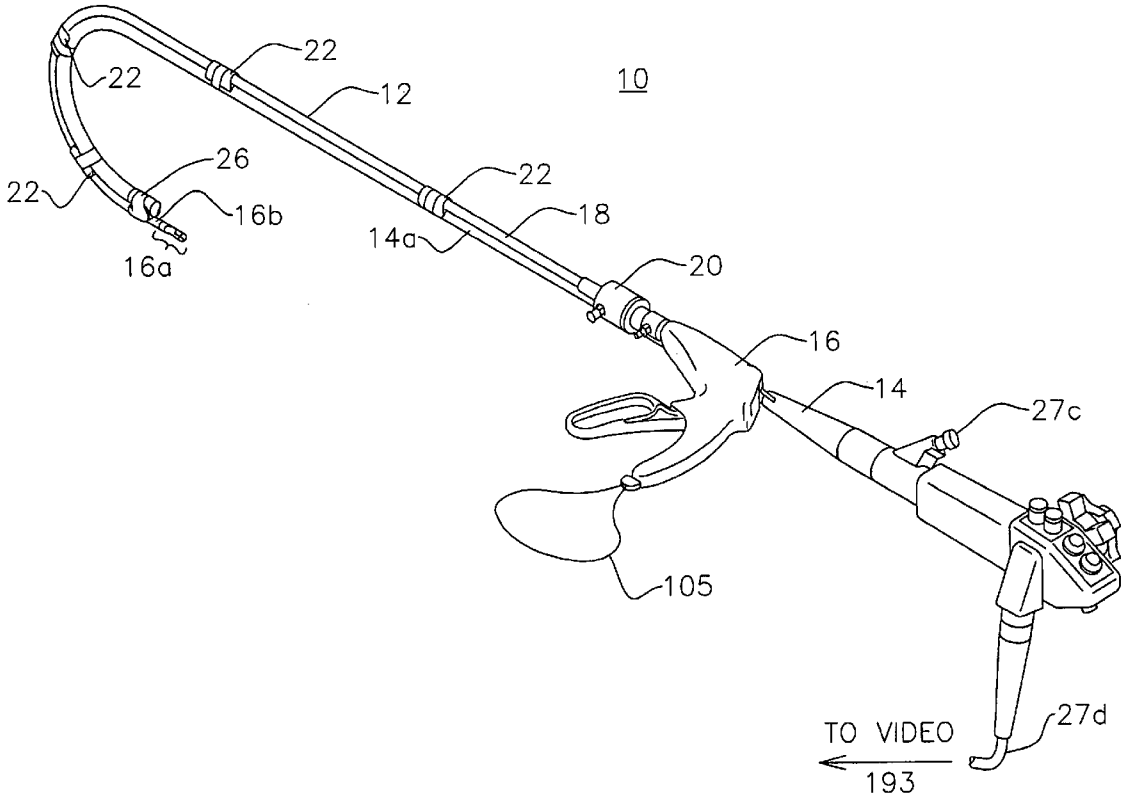

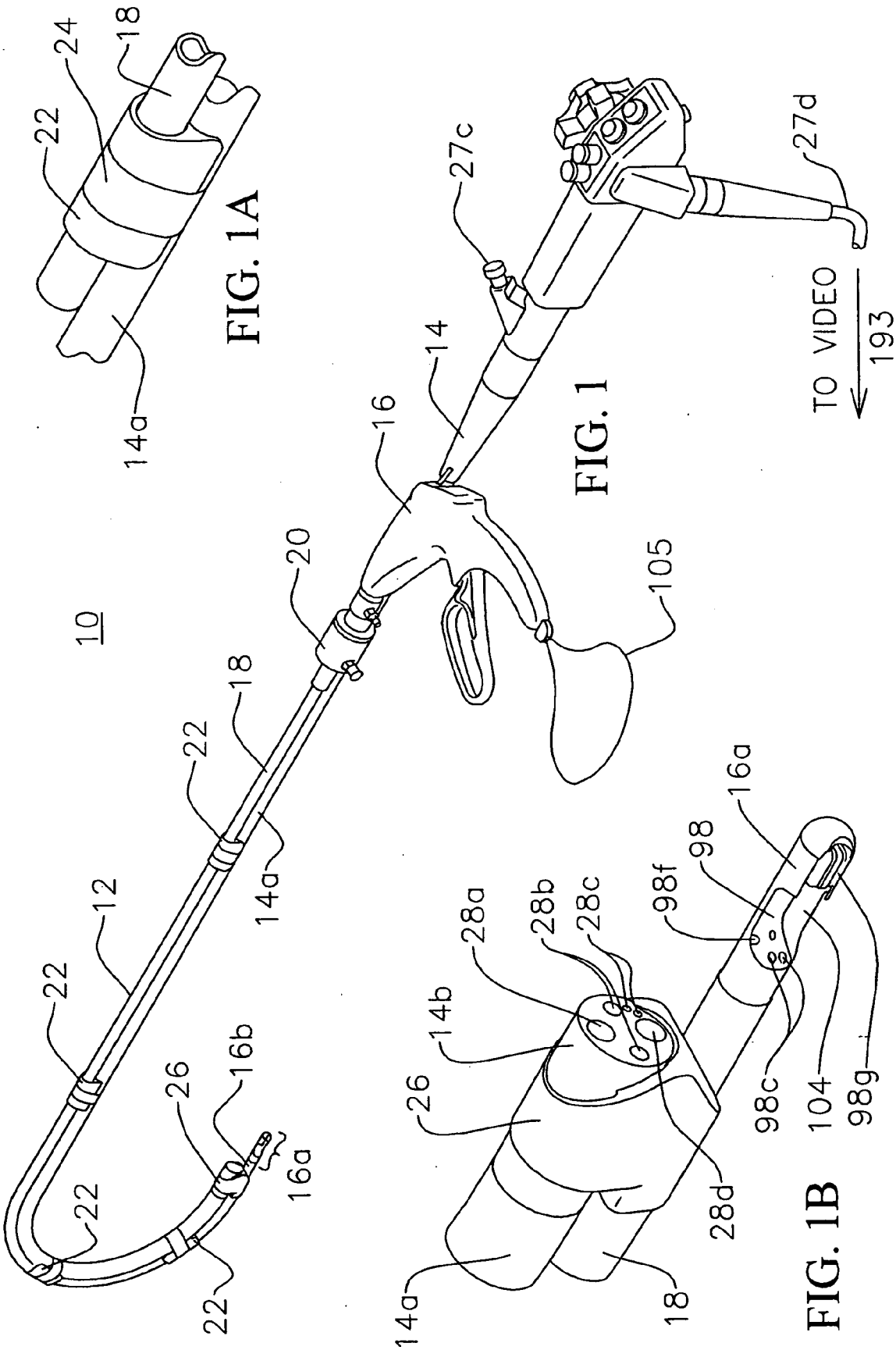

FIG. 1A

FIG. 1

FIG. 1B

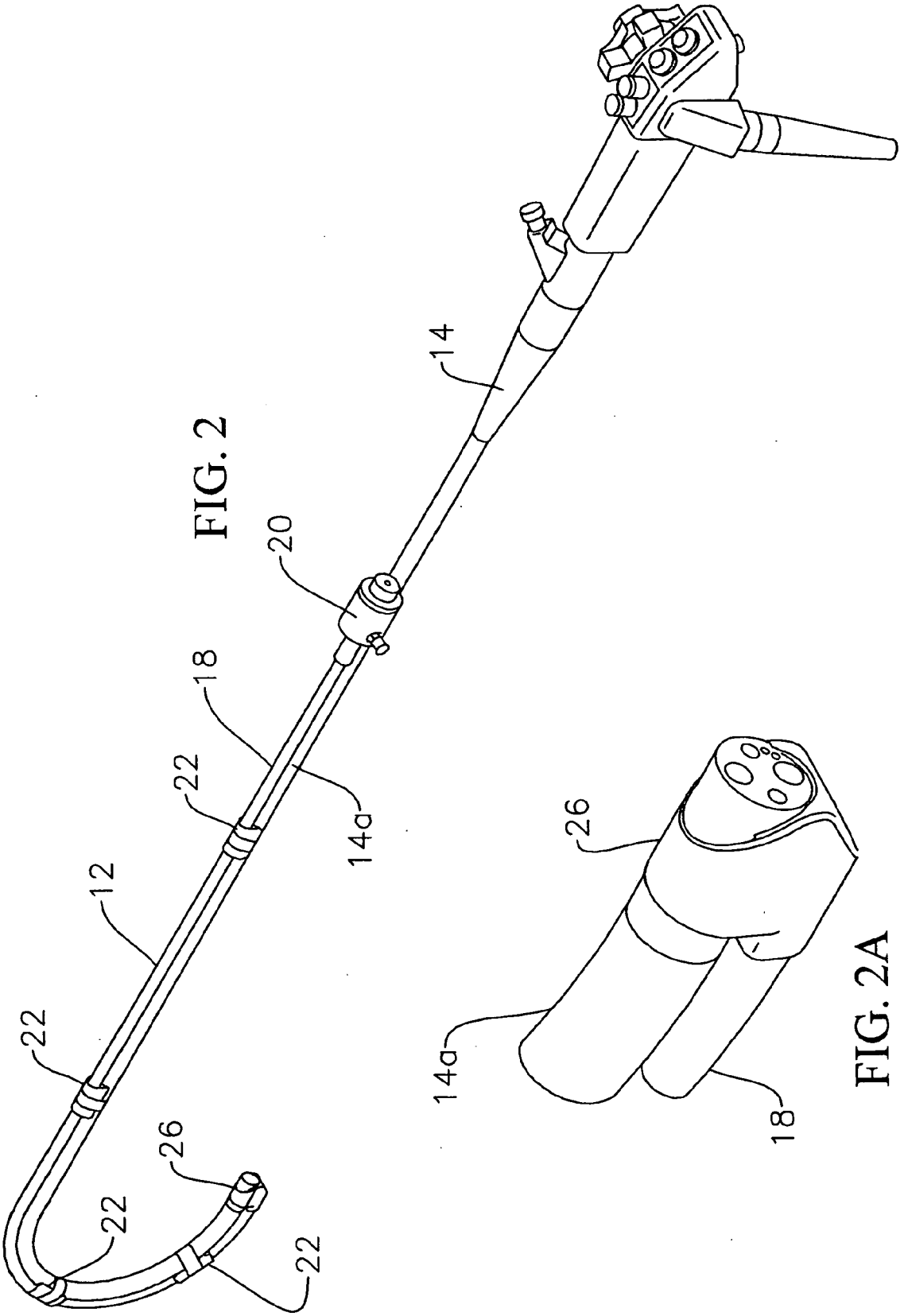

FIG. 2

FIG. 2A

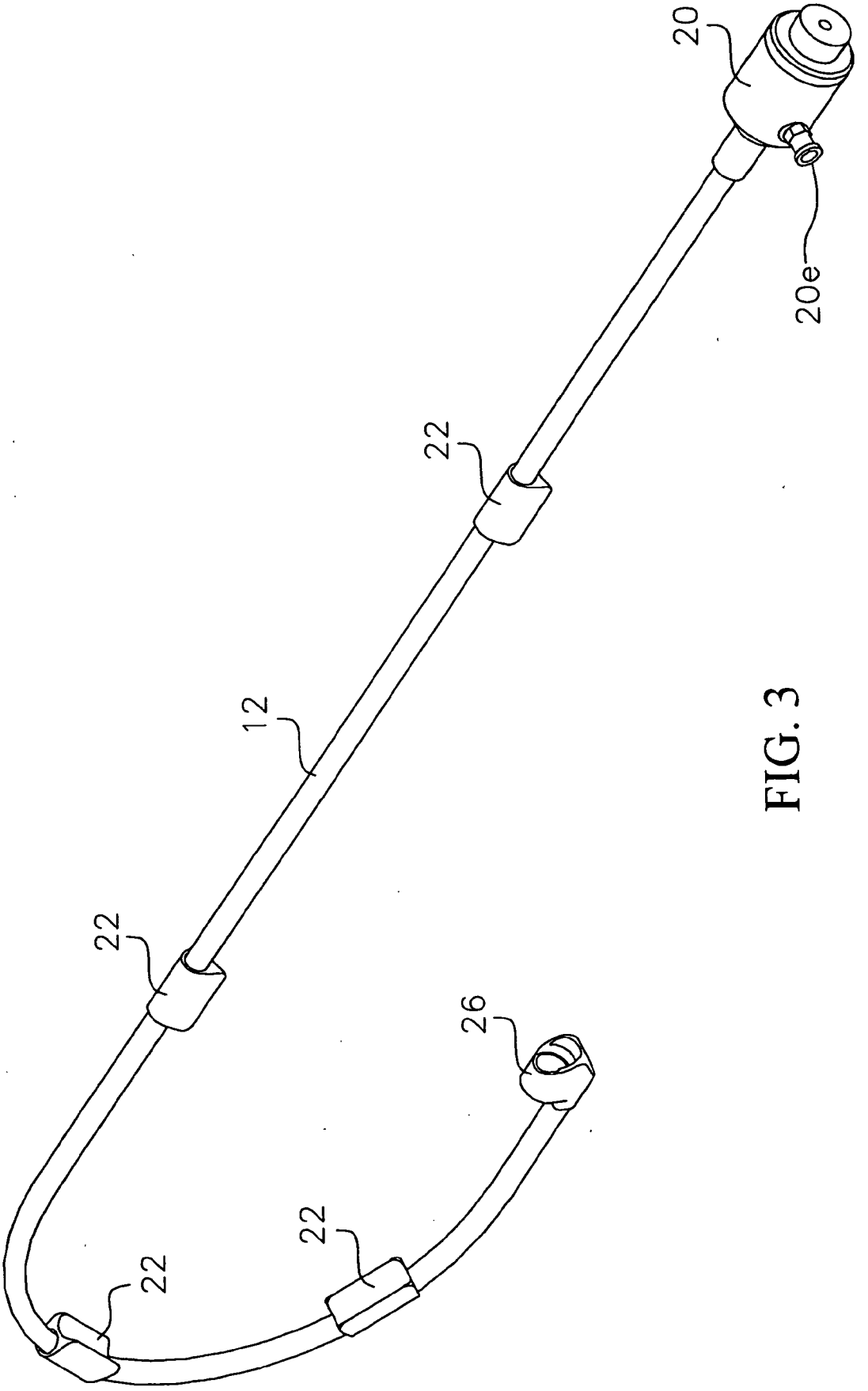

FIG. 3

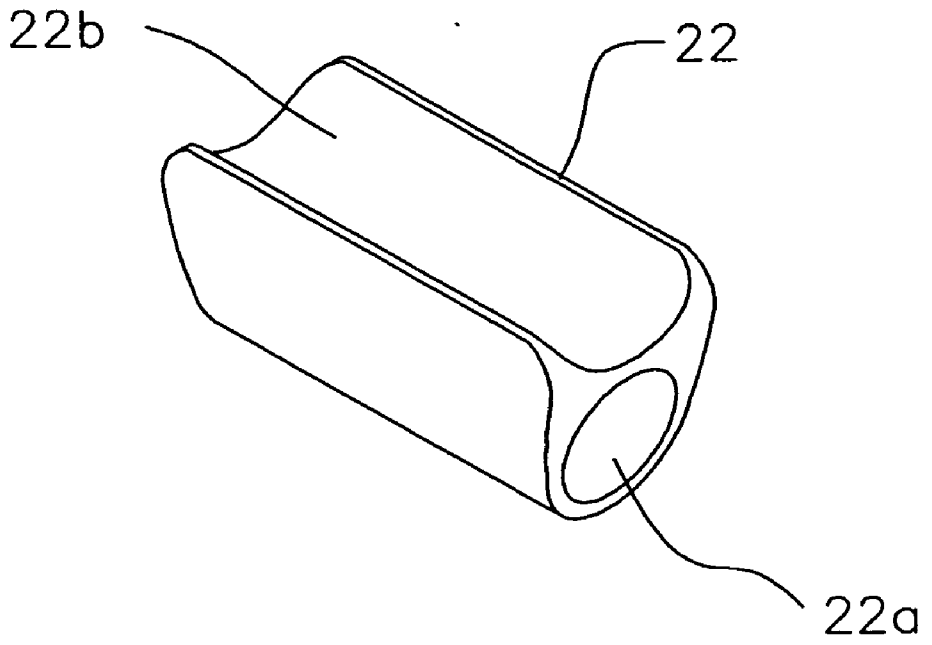

FIG. 4

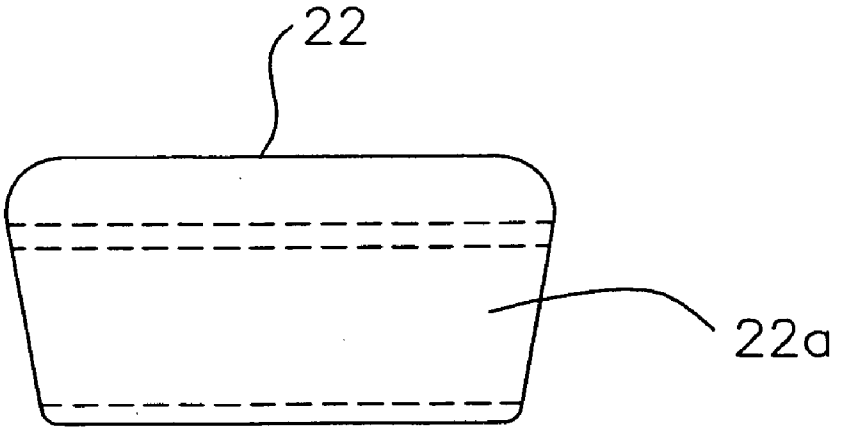

FIG. 4A

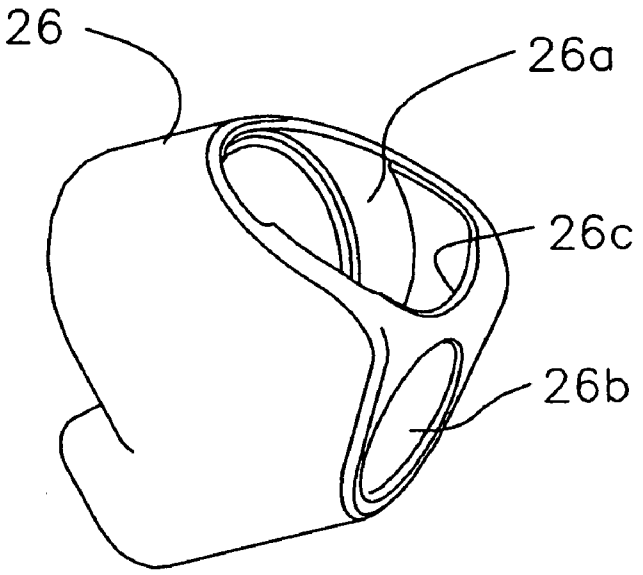

FIG. 5

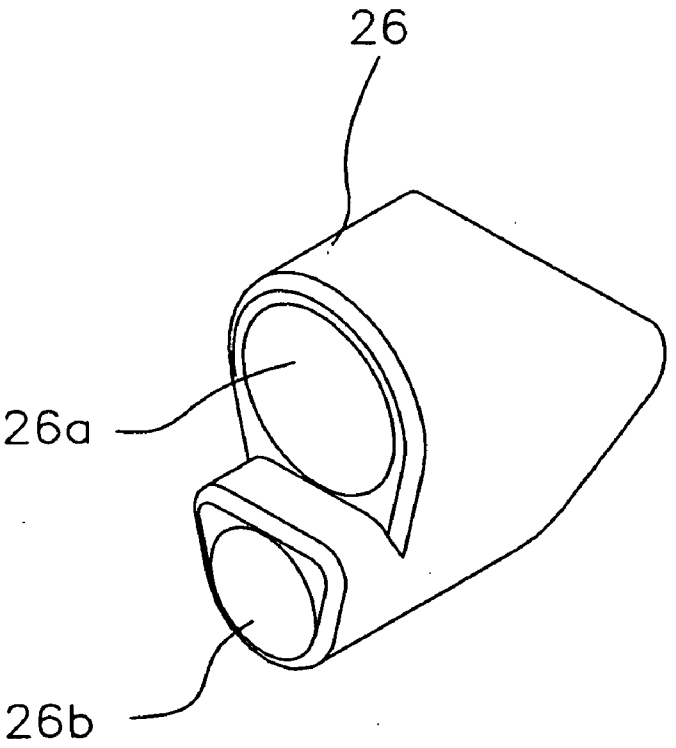

FIG. 5A

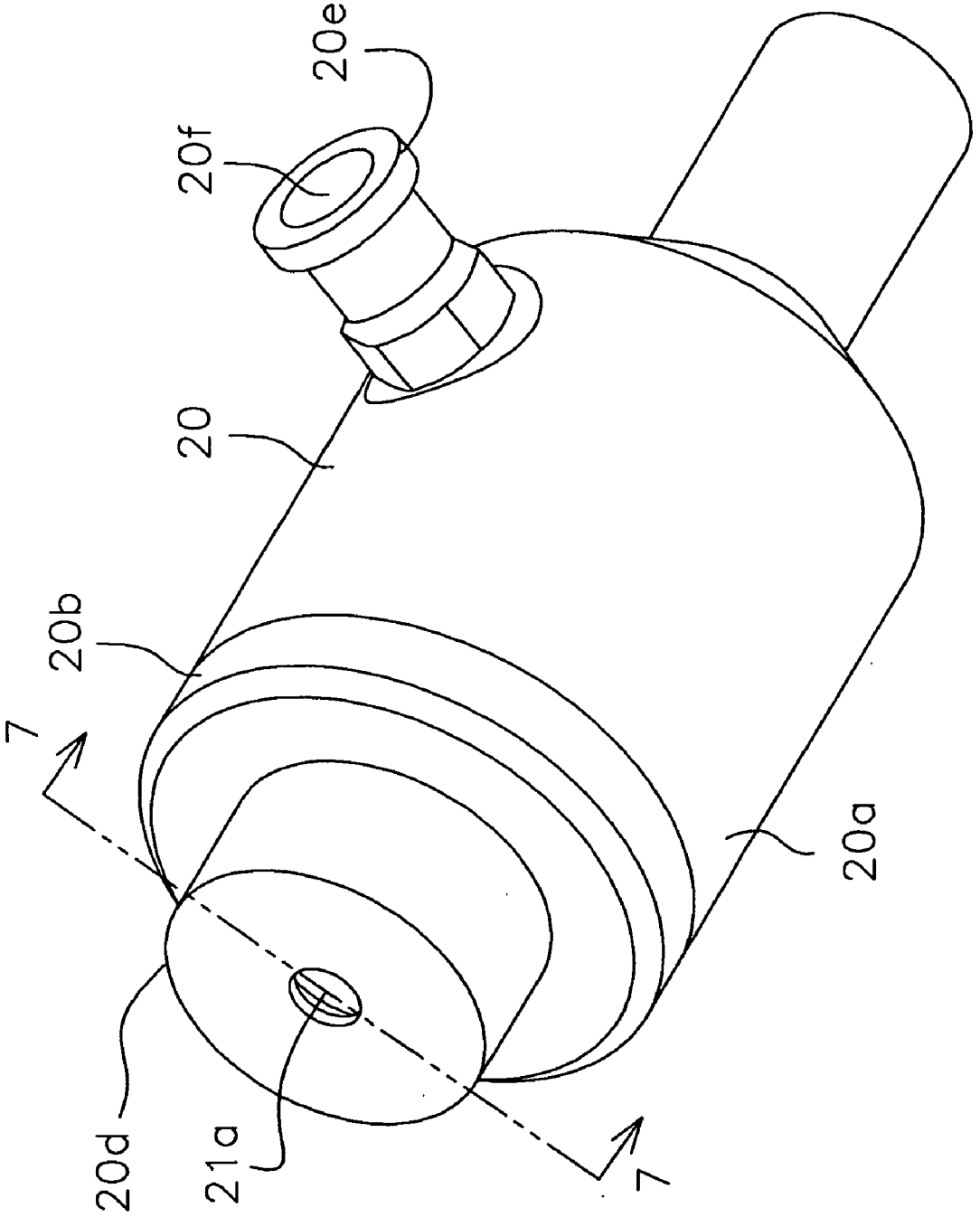

FIG. 6

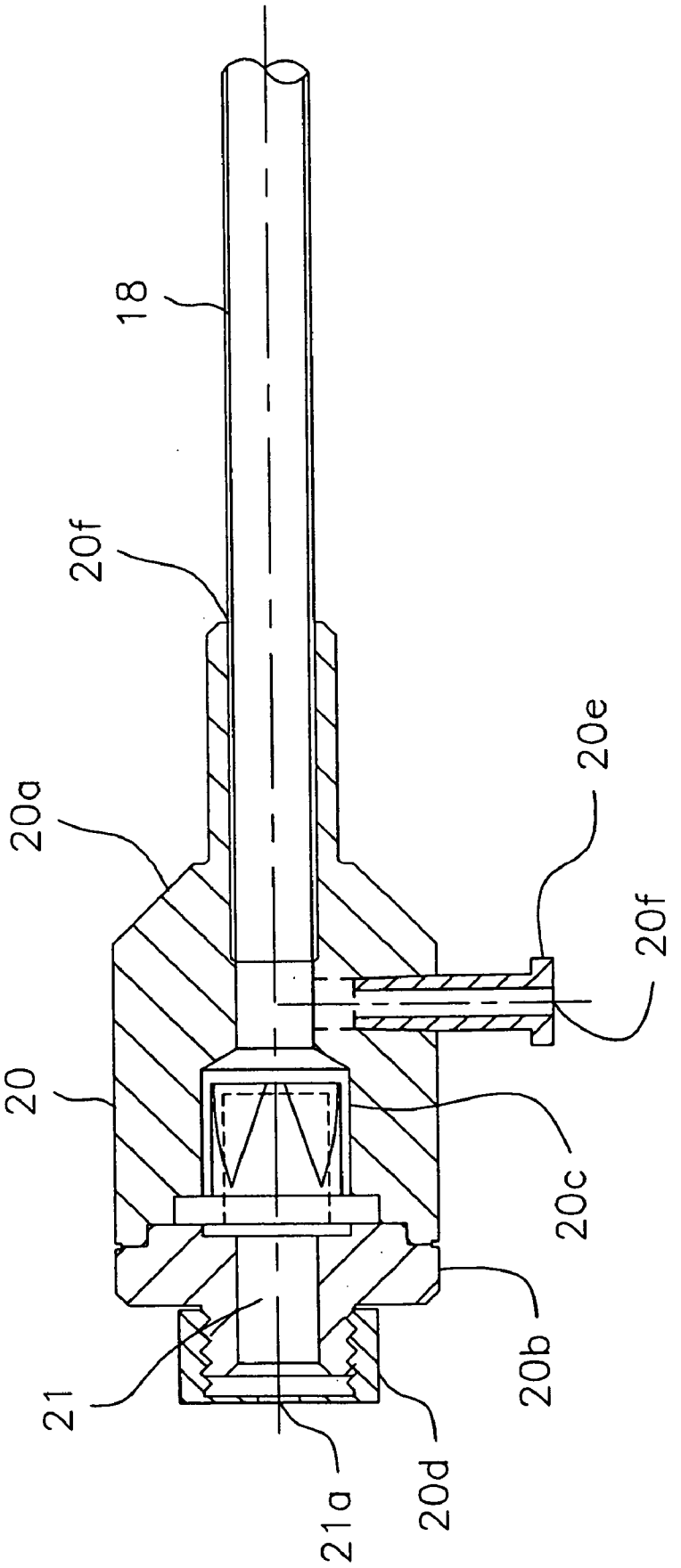

FIG. 7

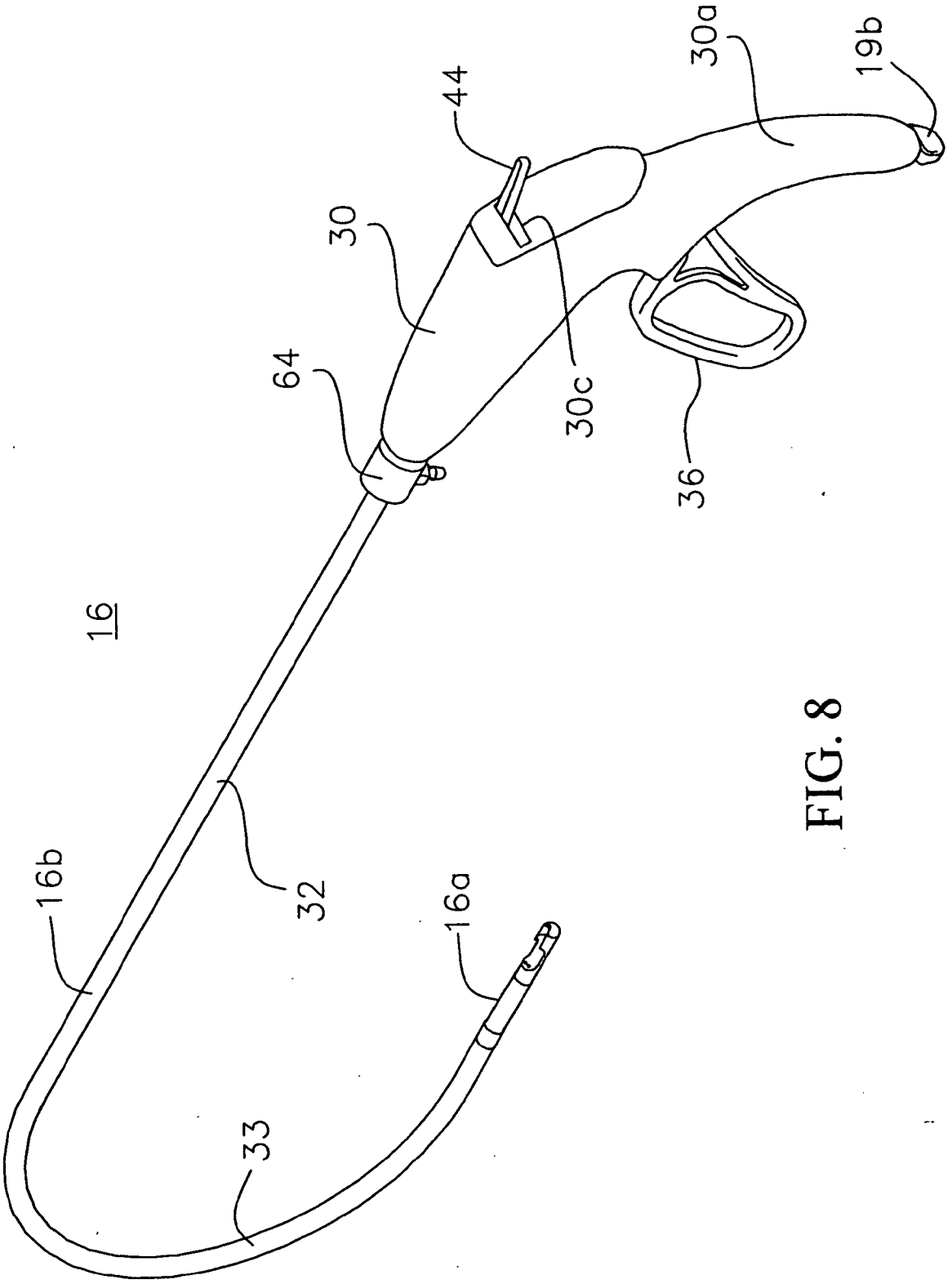

FIG. 8

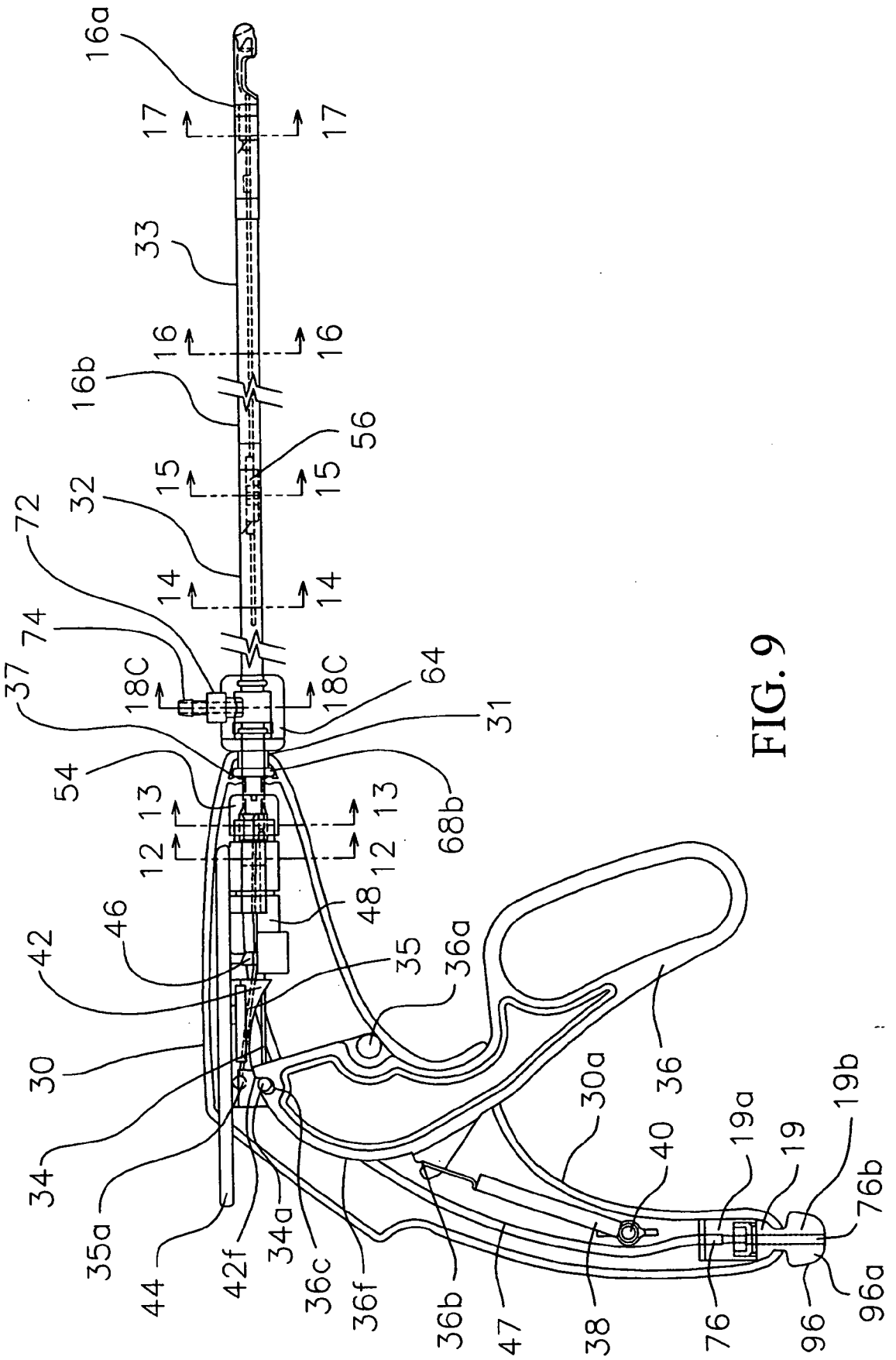
16a
17
17
33
16
16
16b
56
15
15
32
72
14
14
74
37
18C
18C
64
31
54
13
13
12
12
68b
46
48
42
35
36a
30
36
30a
34
40
19a
19
19b
35a
76b
34a
42f
36c
36f
36b
47
38
76
96
96a
44

FIG. 9

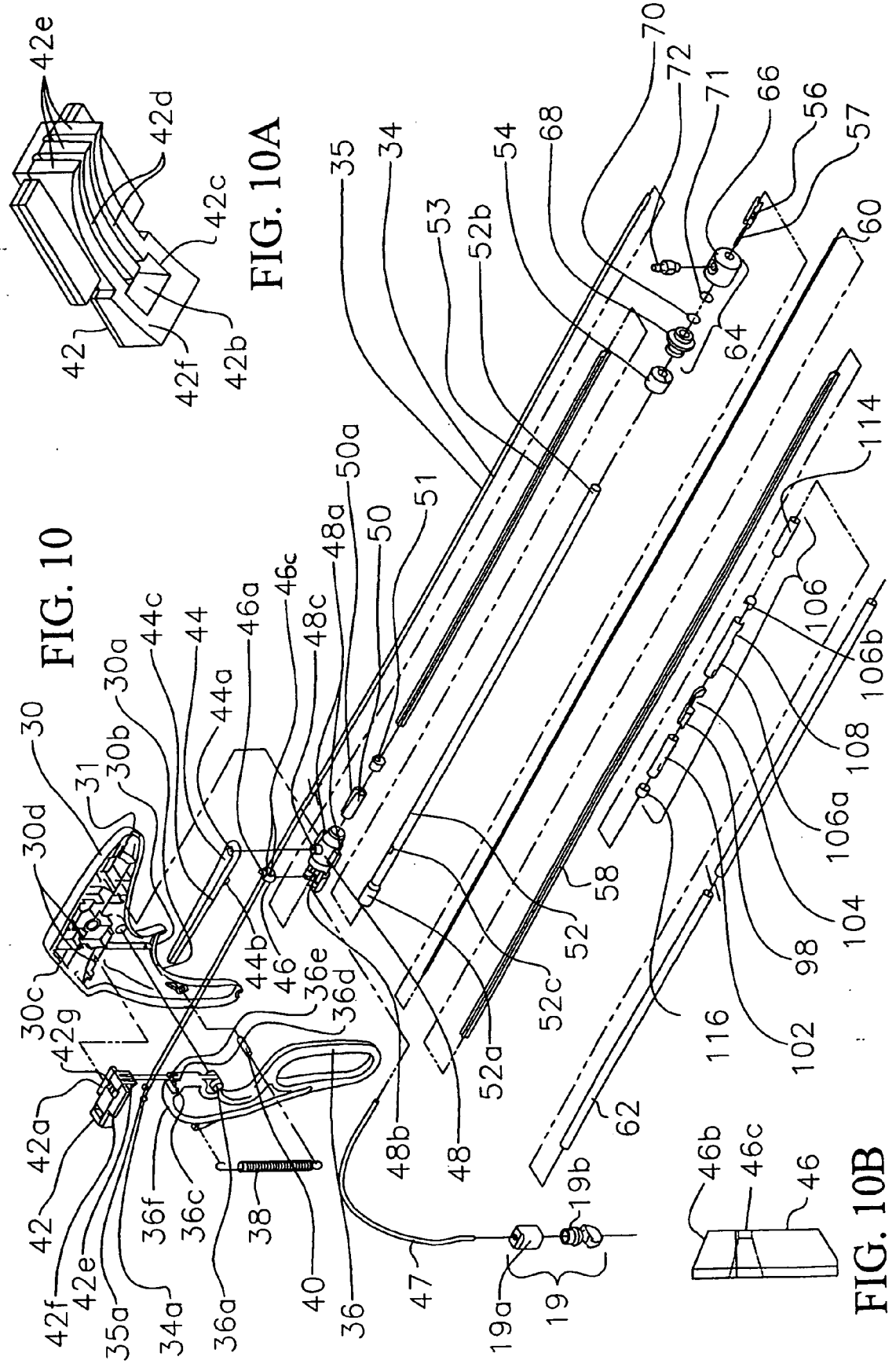

FIG. 10A

FIG. 10

FIG. 10B

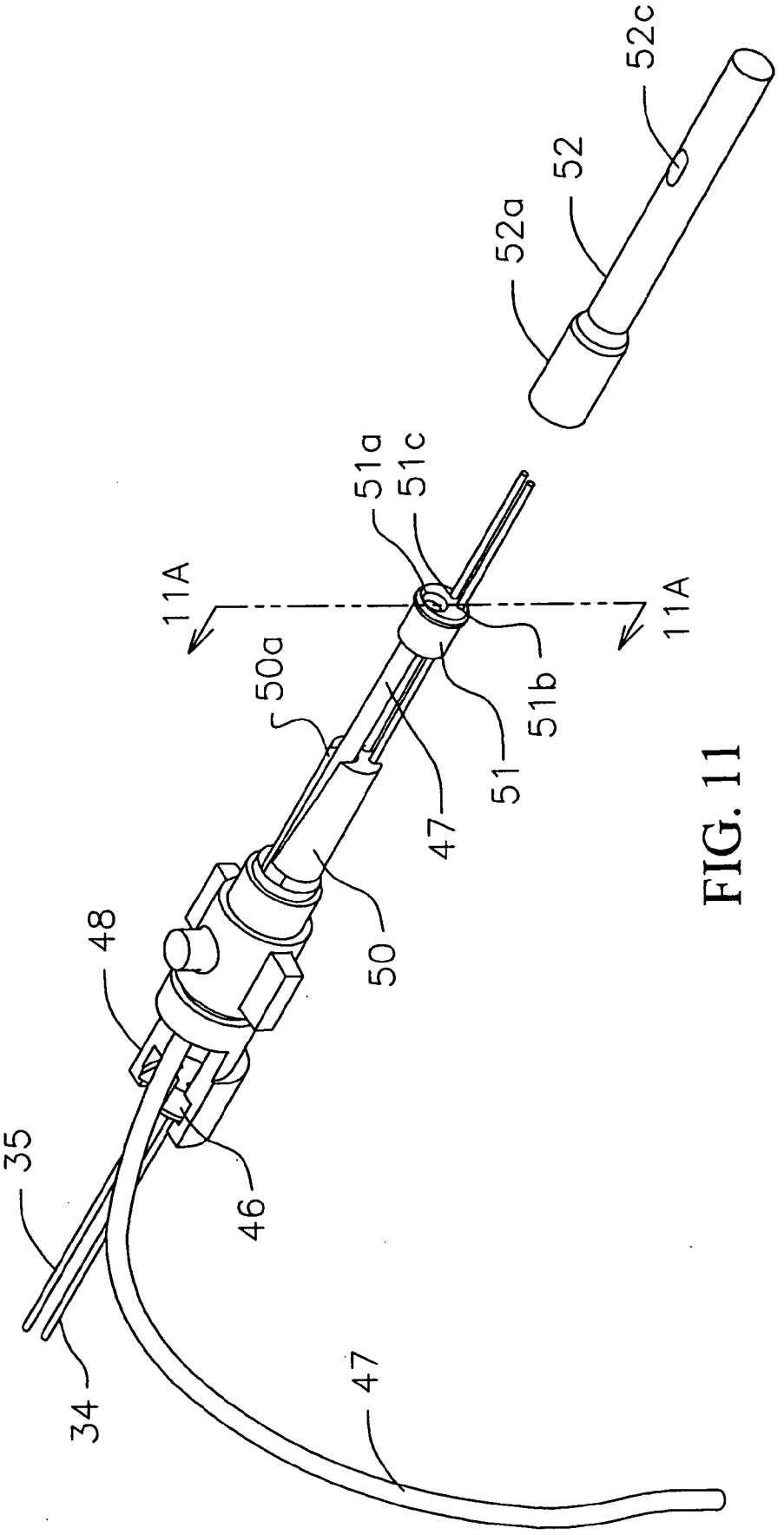

FIG. 11

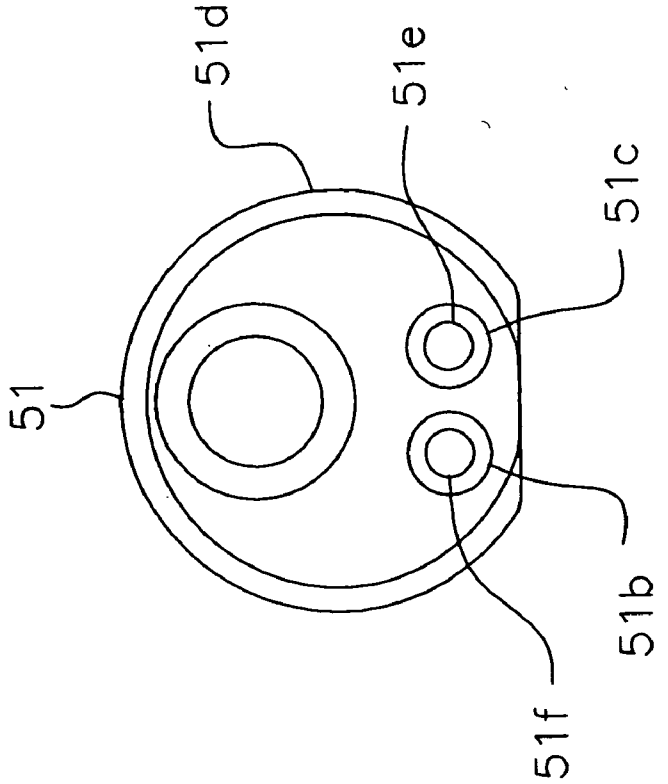

FIG. 11B

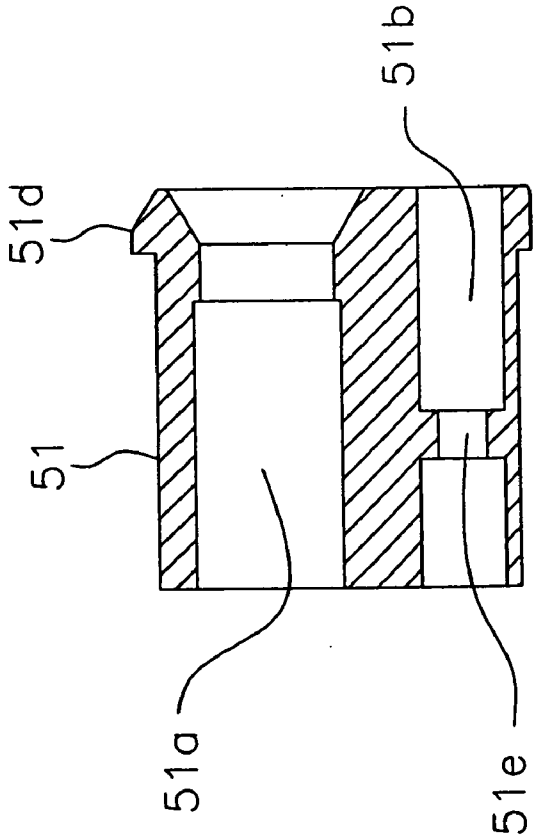

FIG. 11A

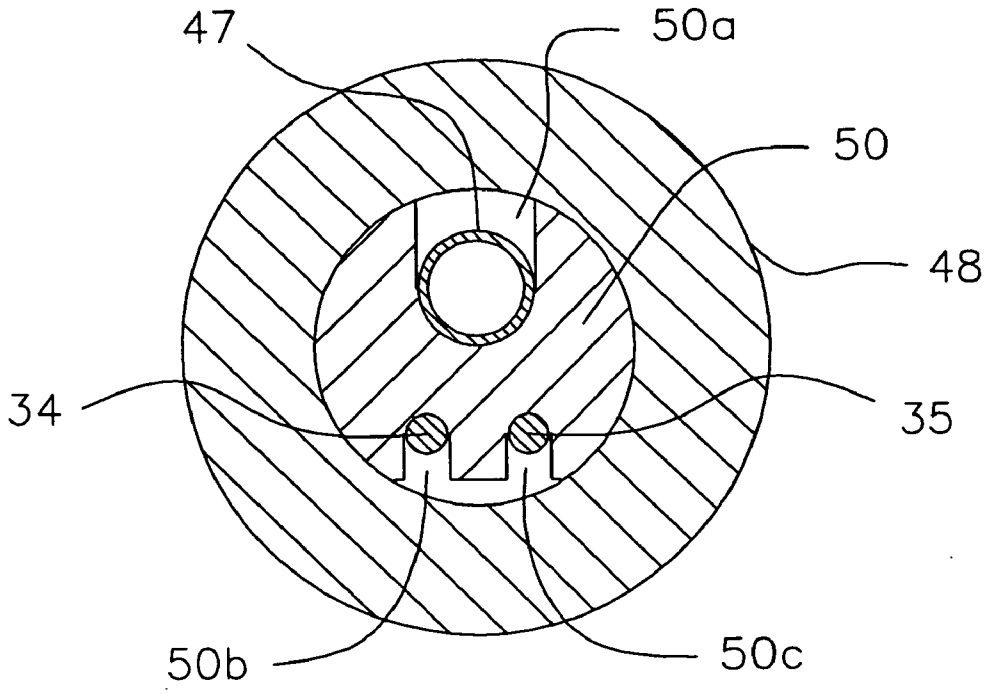

FIG. 12

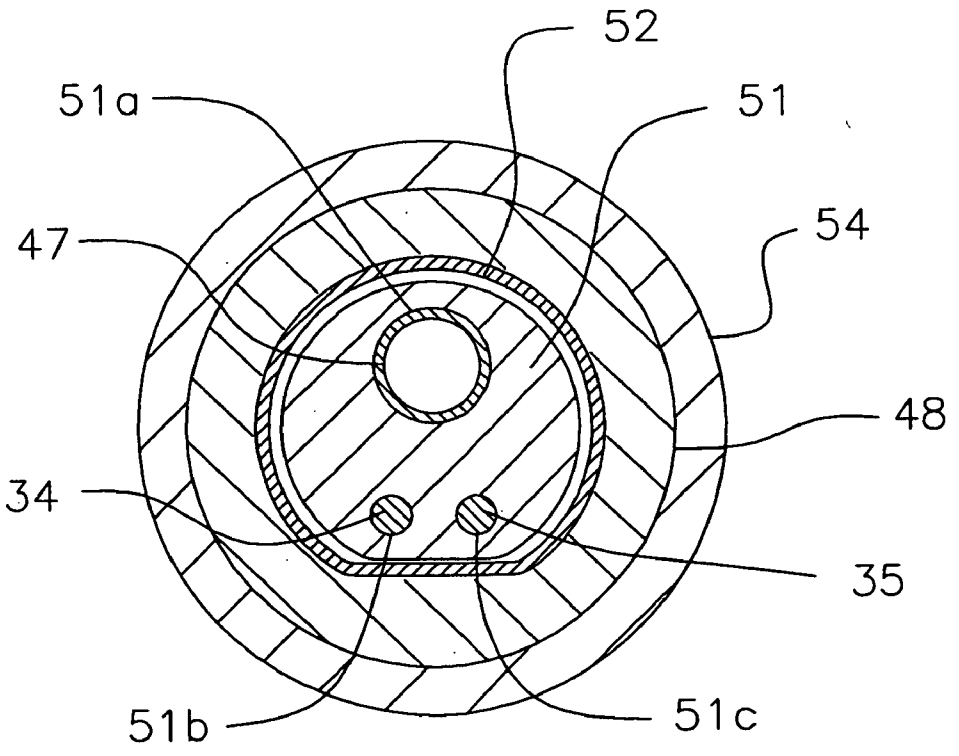

FIG. 13

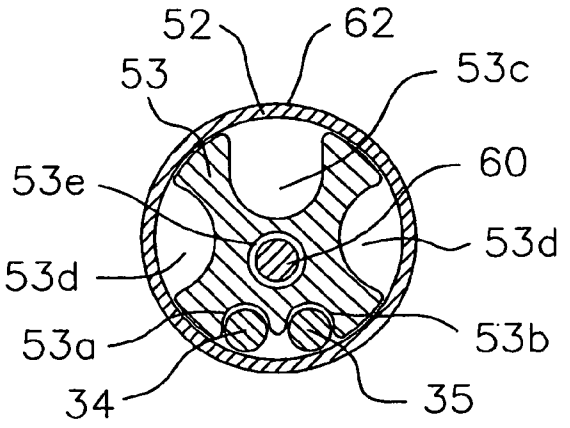

FIG. 14

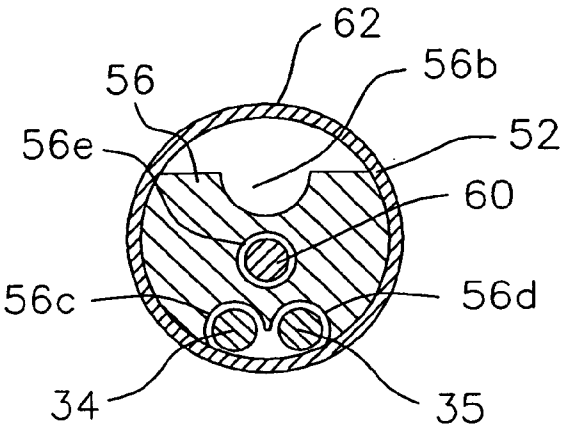

FIG. 15

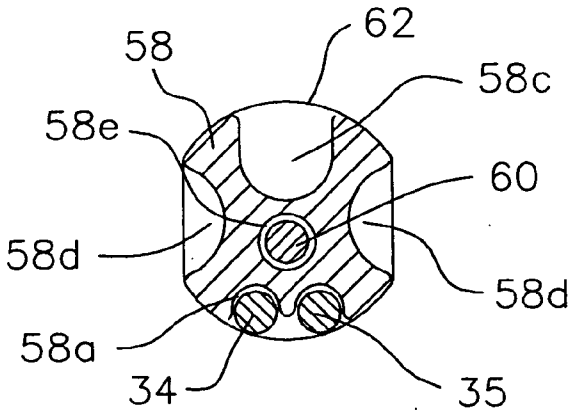

FIG. 16

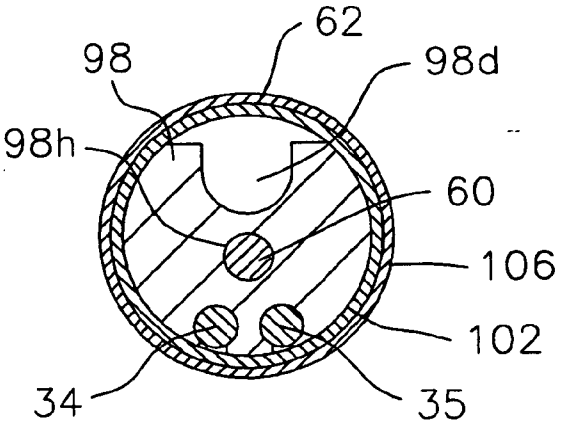

FIG. 17

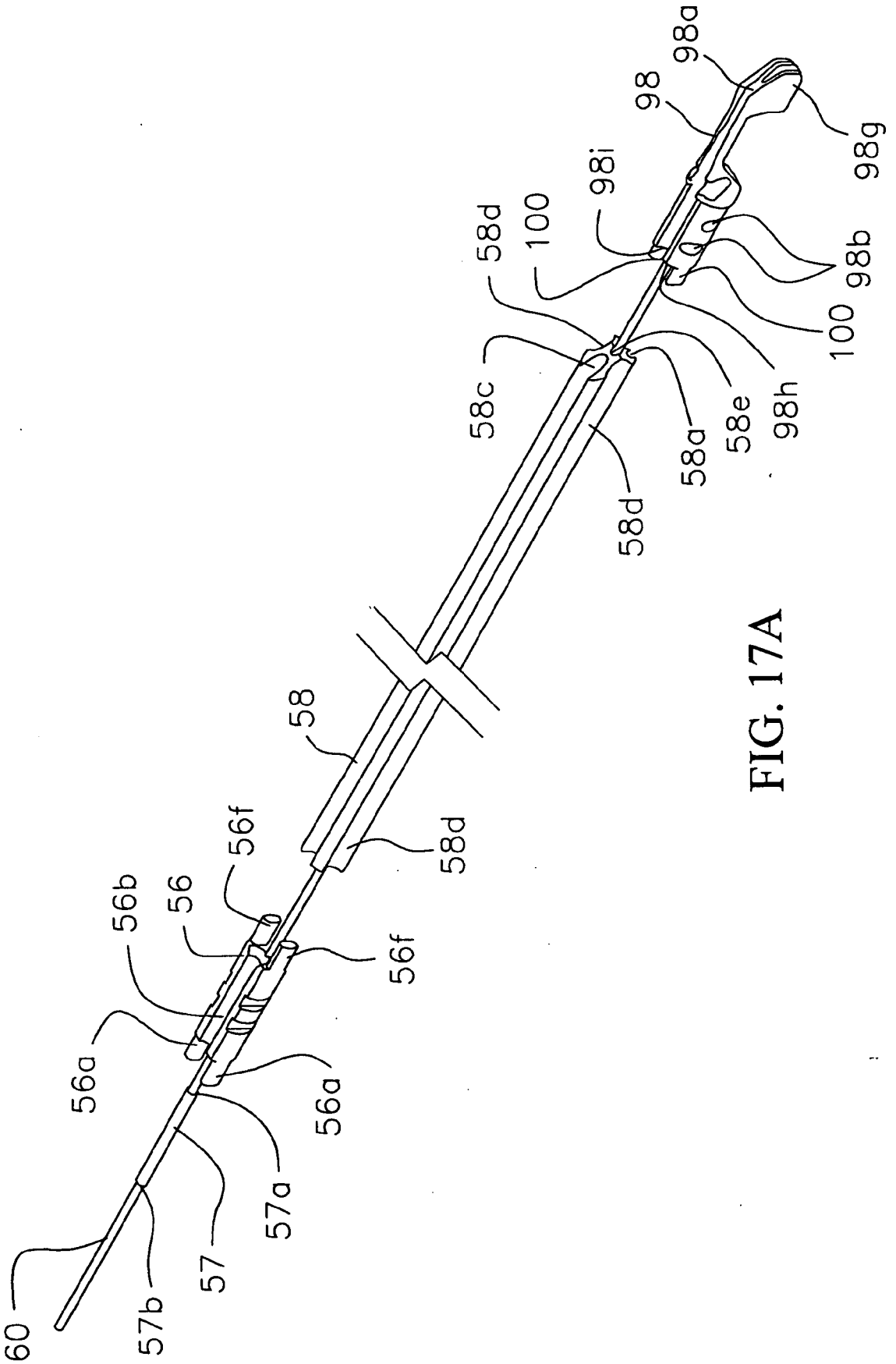
98a
98
98g
98i
58d
100
98b
100
58c
58a
58e
98h
58d
58
58d
56f
56b
56
56f
56a
56a
57a
57
57b
60

FIG. 17A

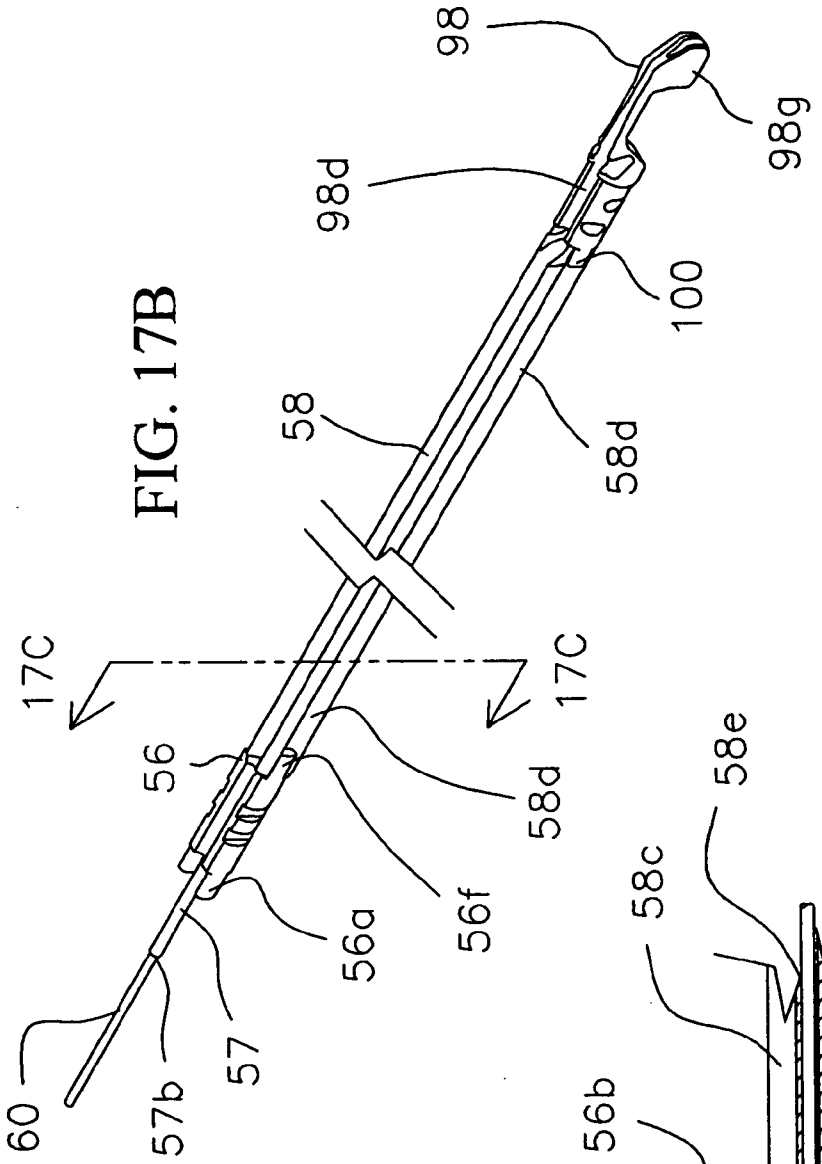

FIG. 17B

FIG. 17C

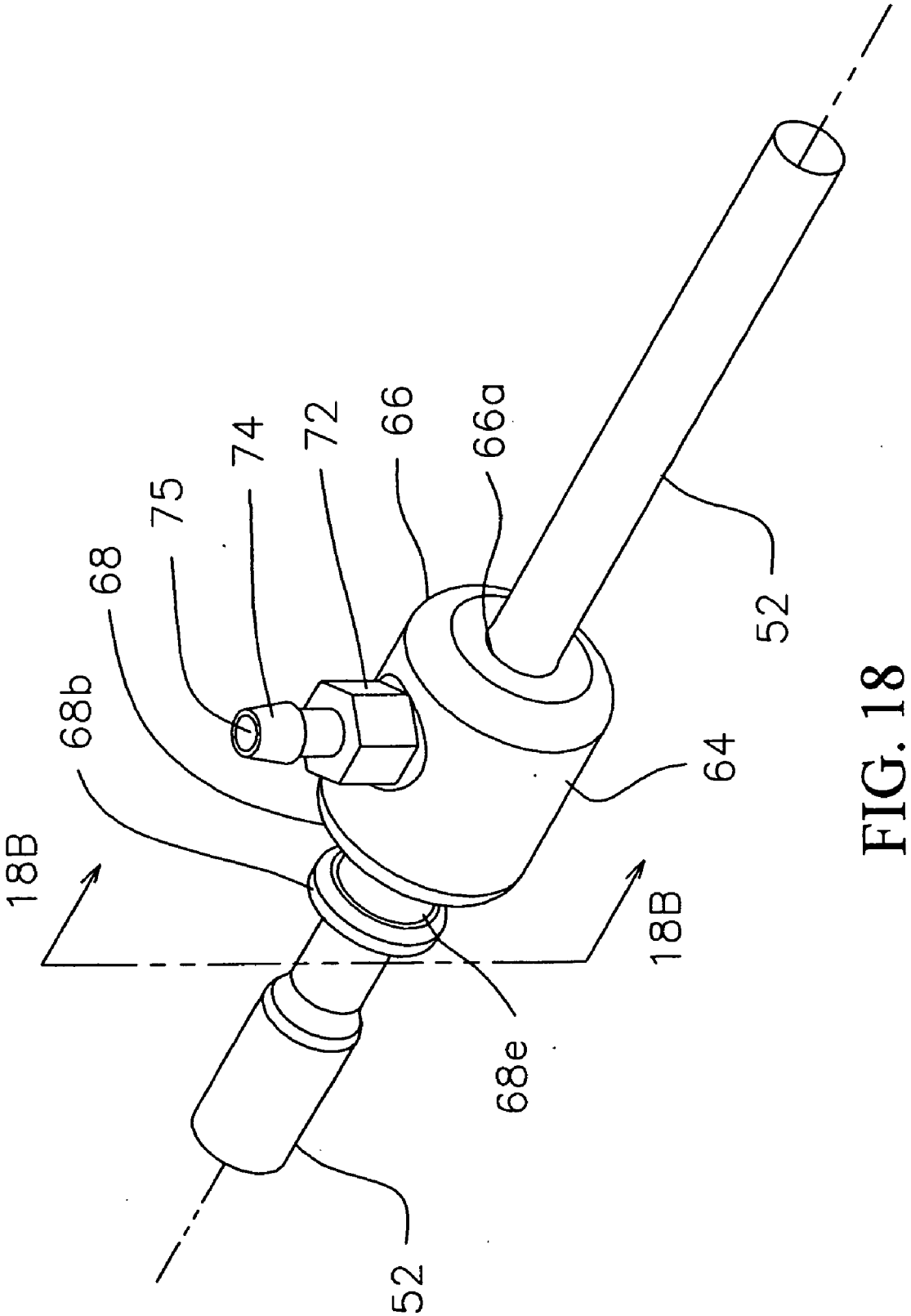

FIG. 18

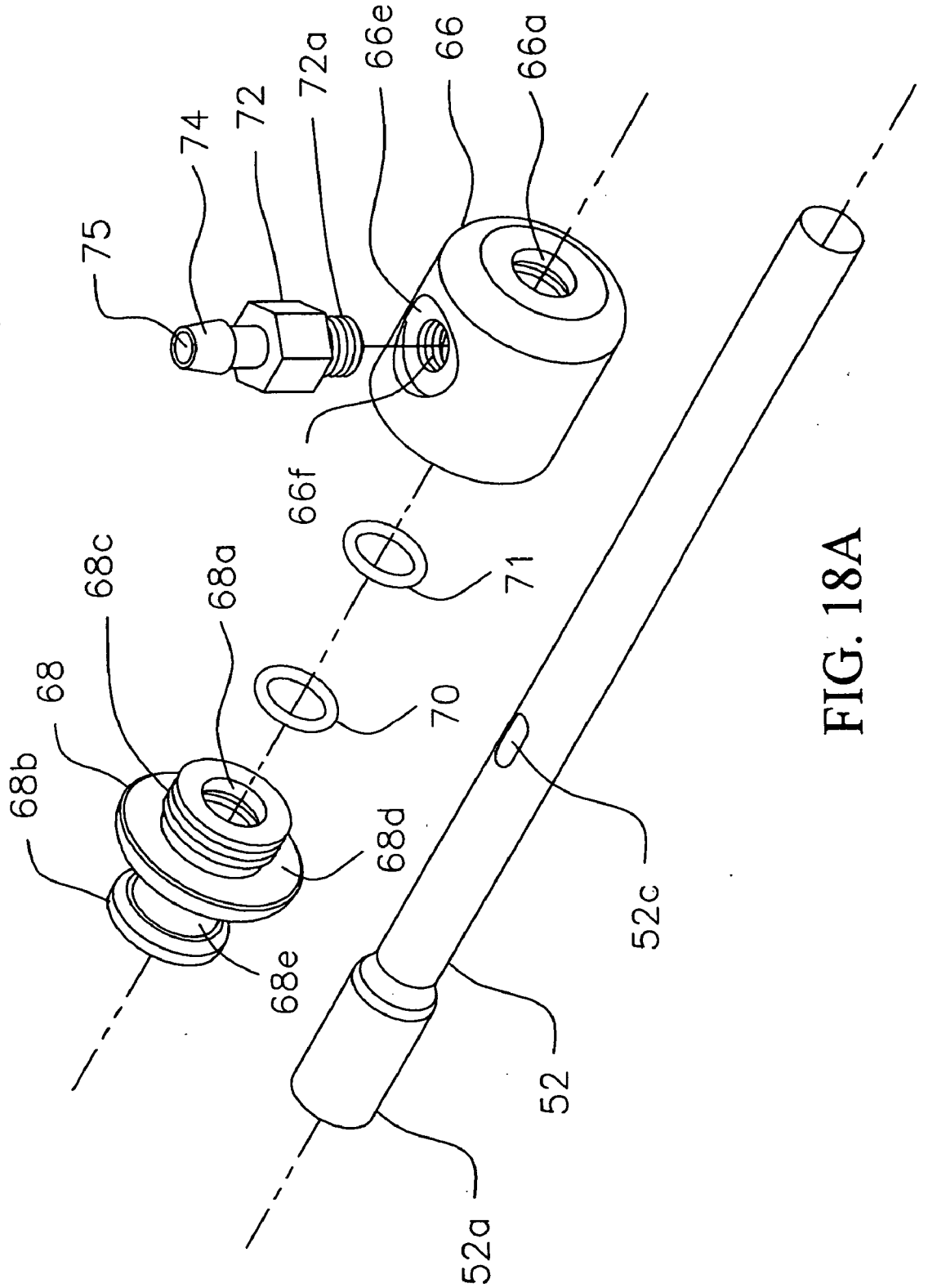

FIG. 18A

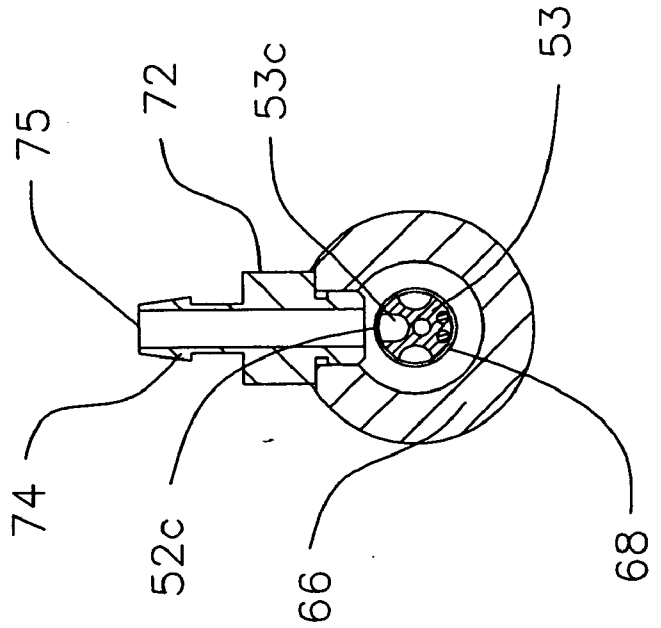

FIG. 18C

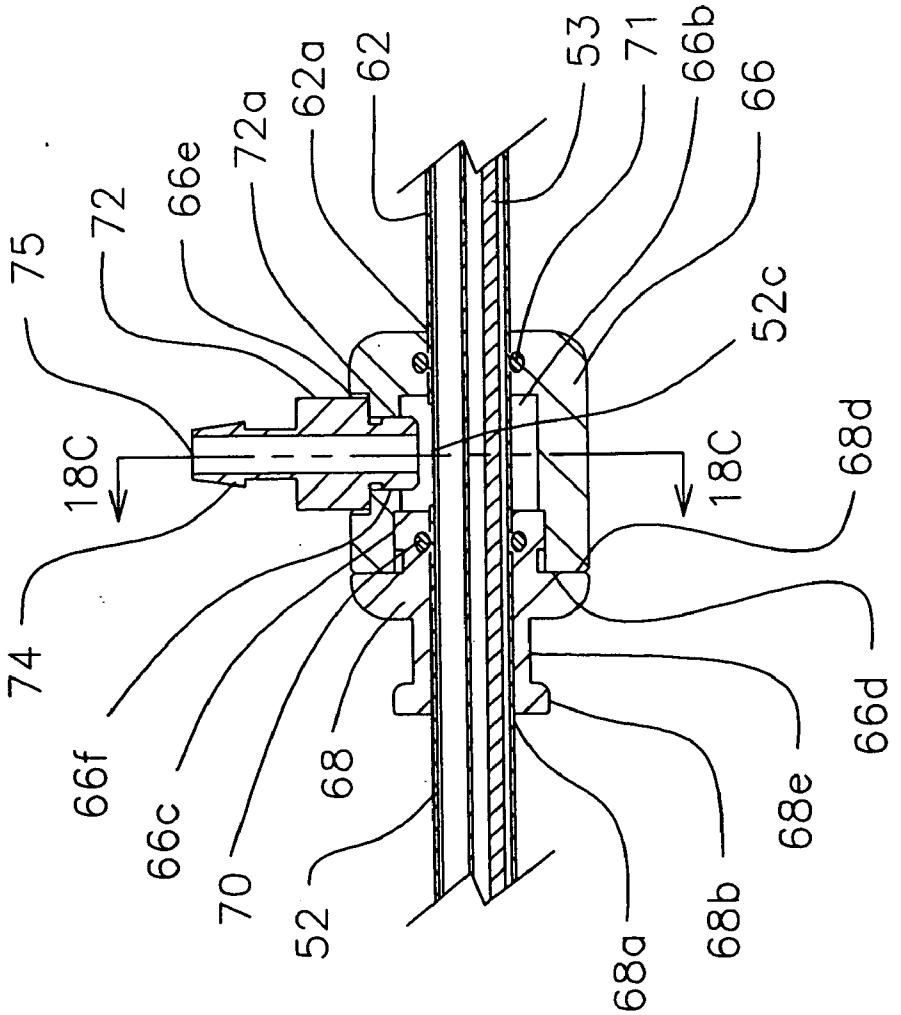

FIG. 18B

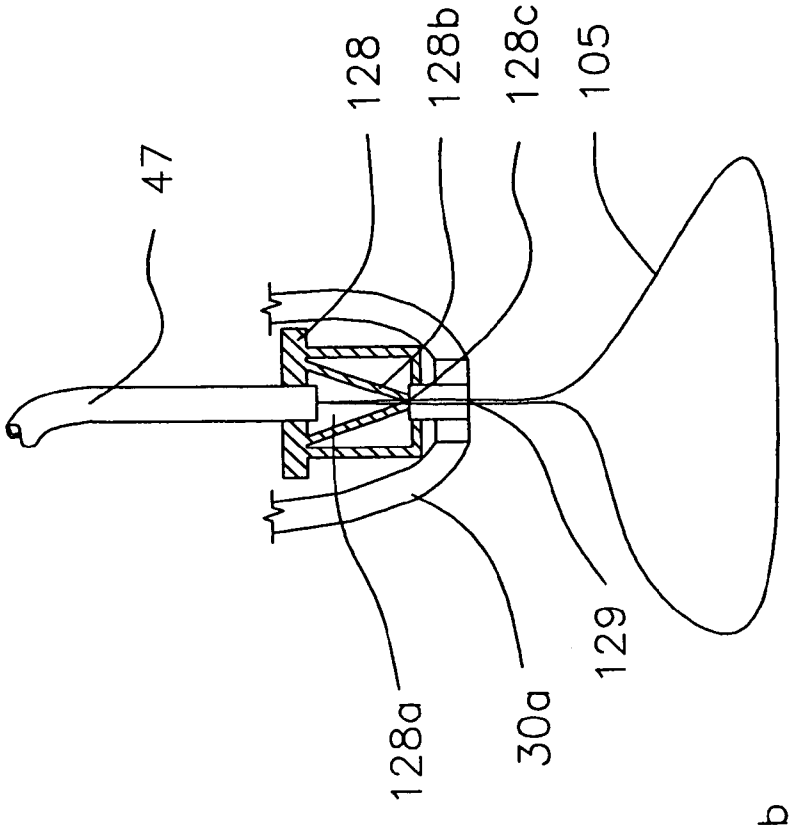

FIG. 19C

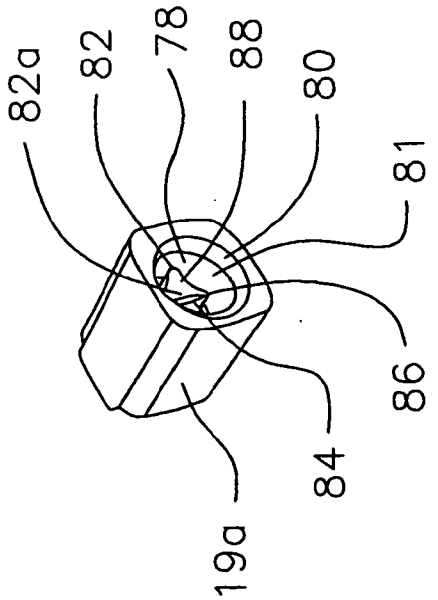

FIG. 19B

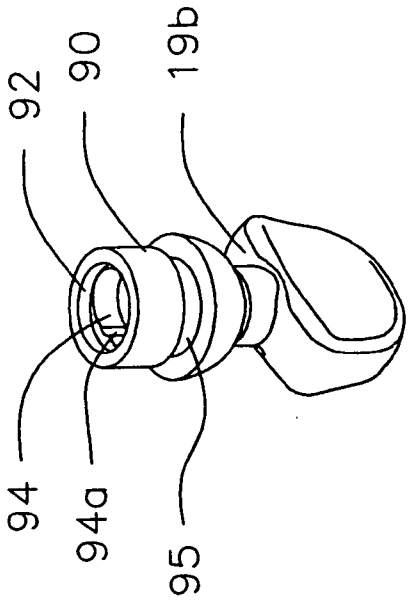

FIG. 19A

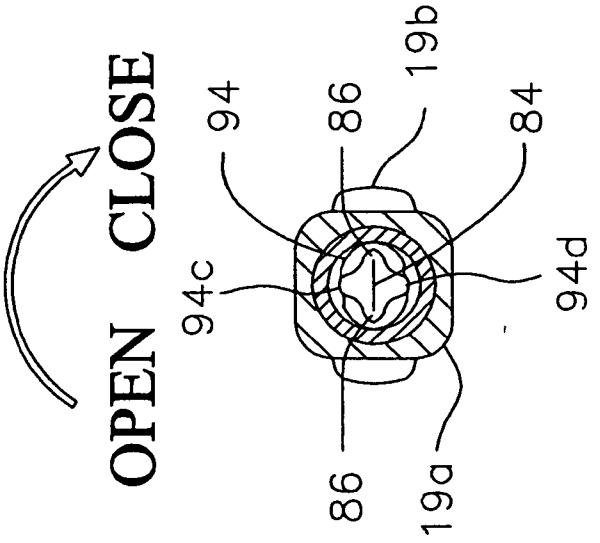

FIG. 20C

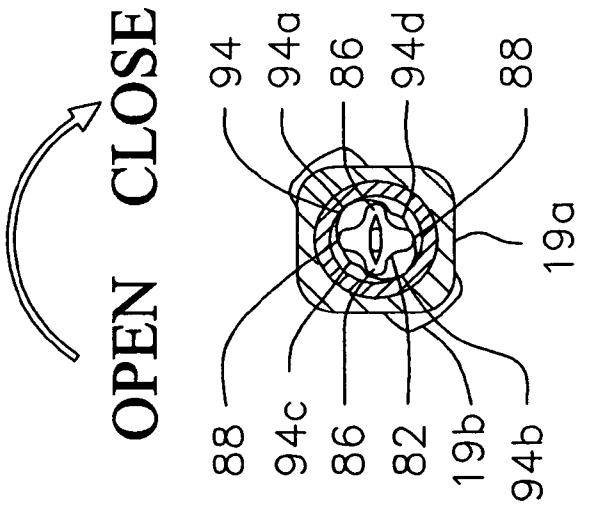

FIG. 20B

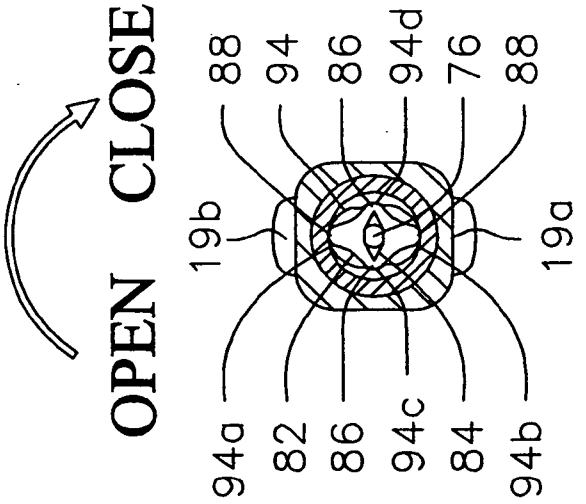

FIG. 20A

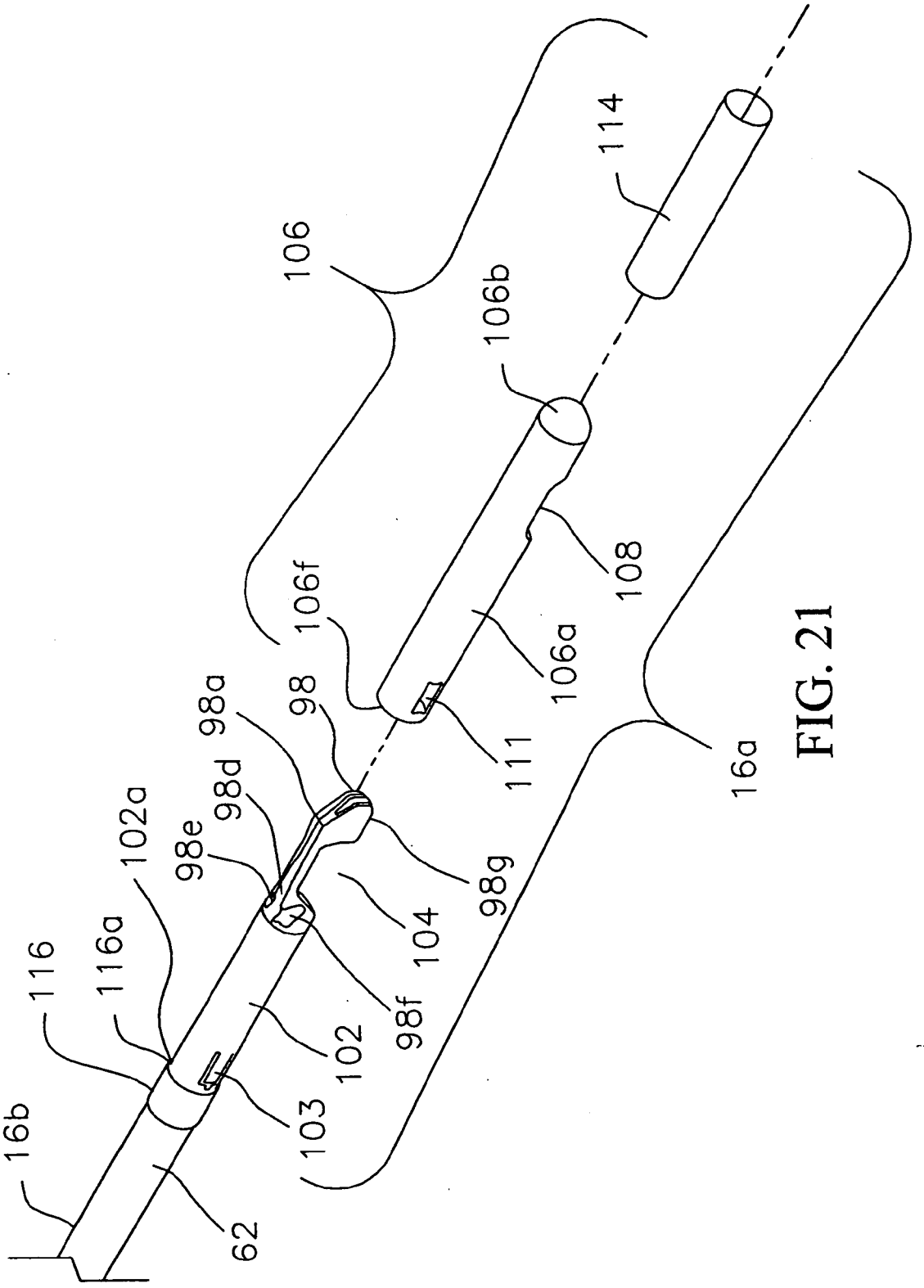
16b
62
103
102
116
116a
102a
98e
98d
98a
98
106f
106
106b
114
108
106a
111
16a
98g
104
98f

FIG. 21

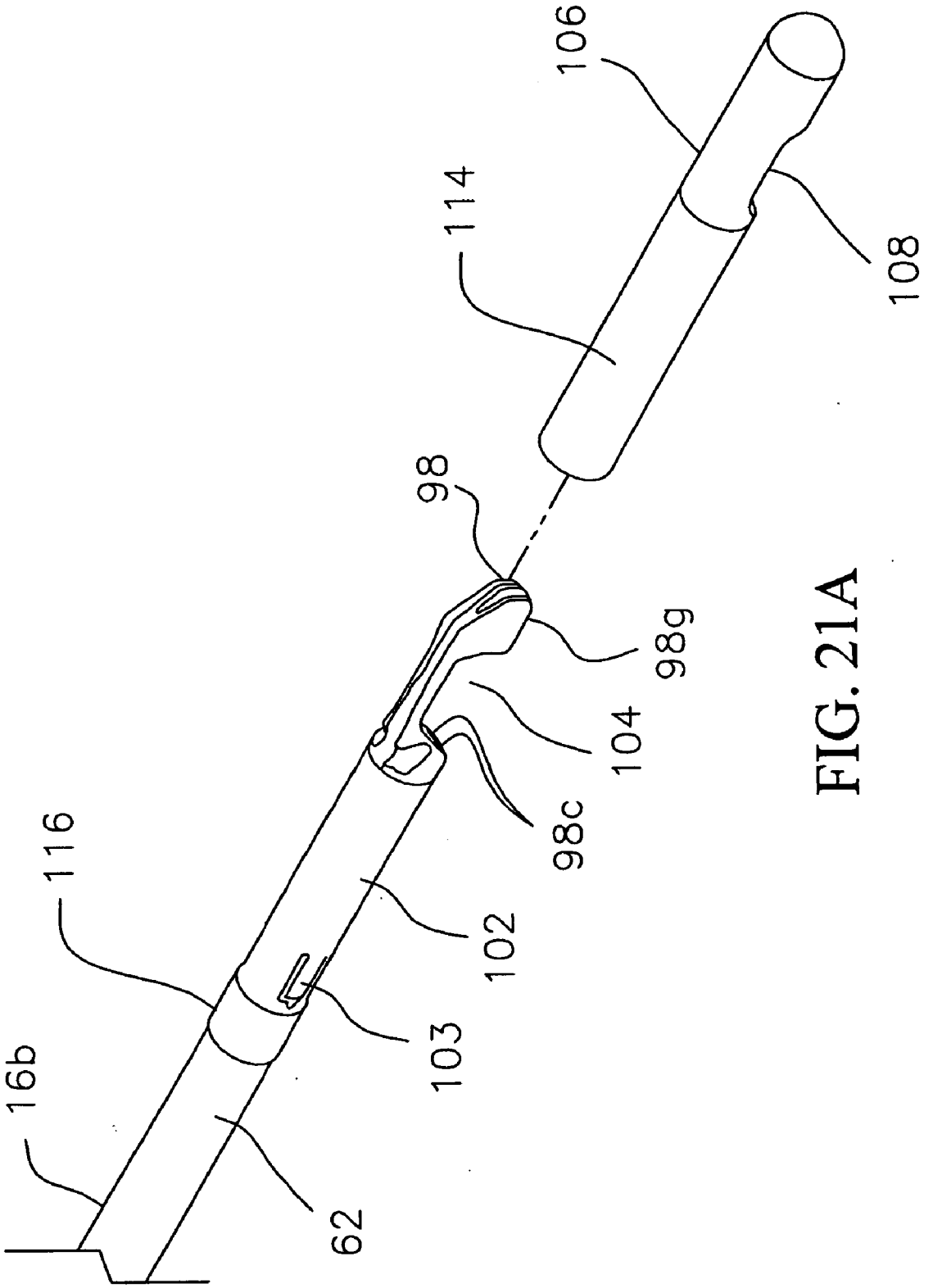

FIG. 21A

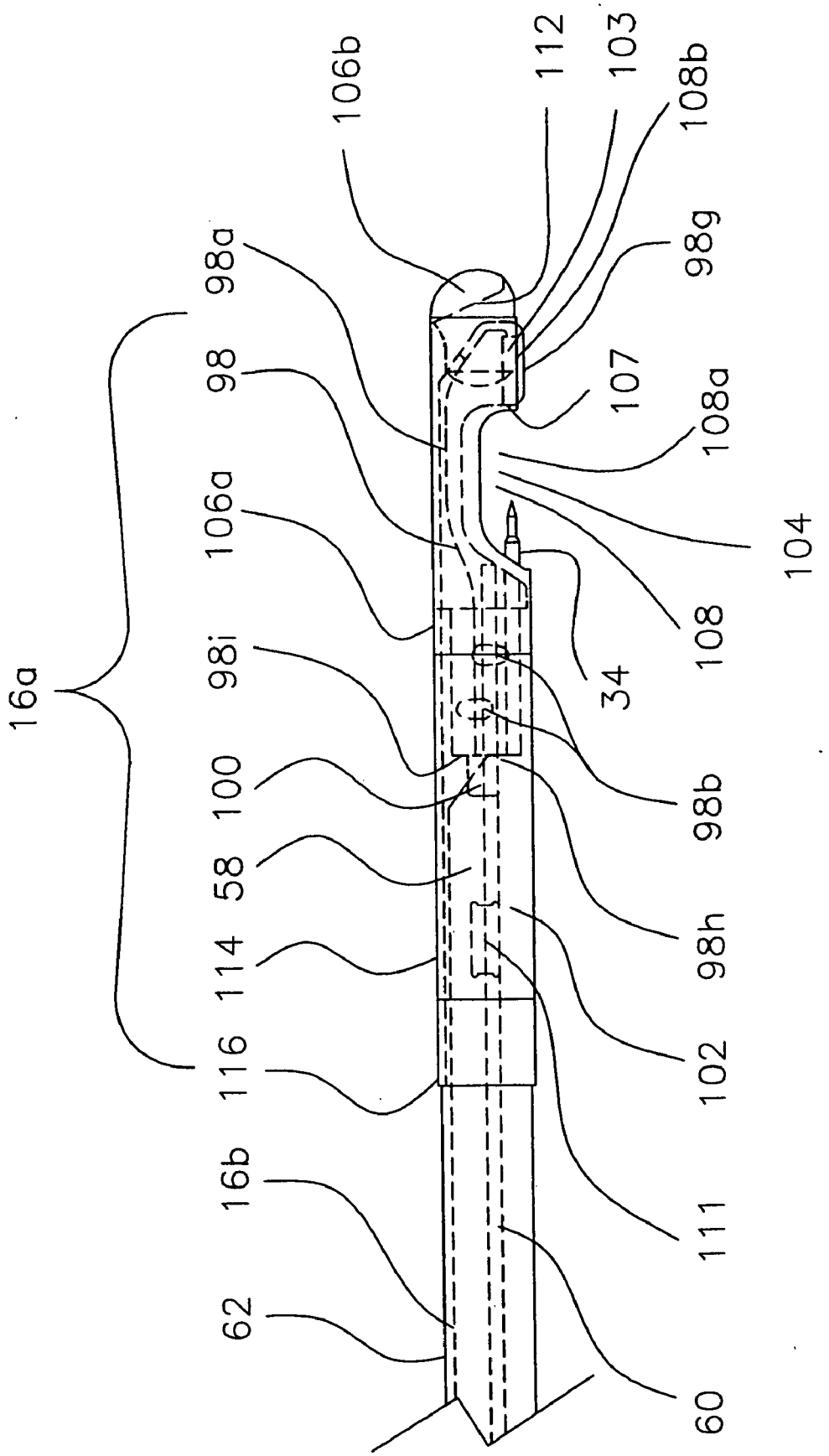
16a
98a
98
106a
98i
100
58
114
116
16b
62
106b
112
103
108b
98g
107
108a
104
108
34
98b
98h
102
111
60

FIG. 21B

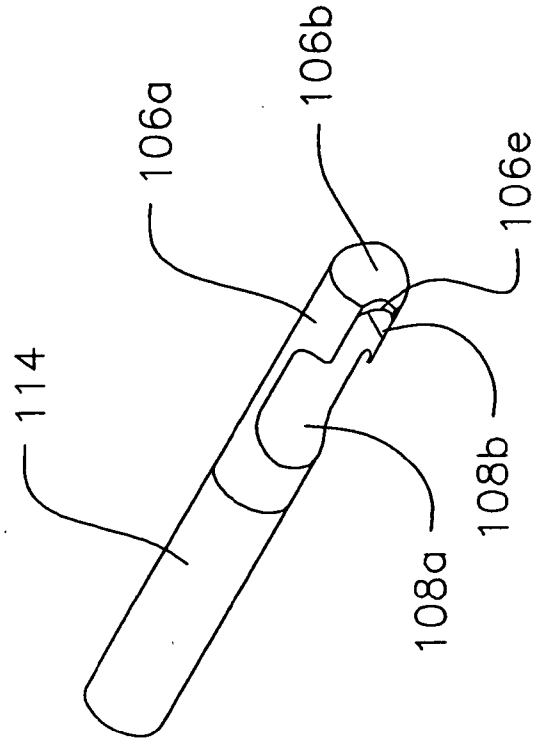

FIG. 21D

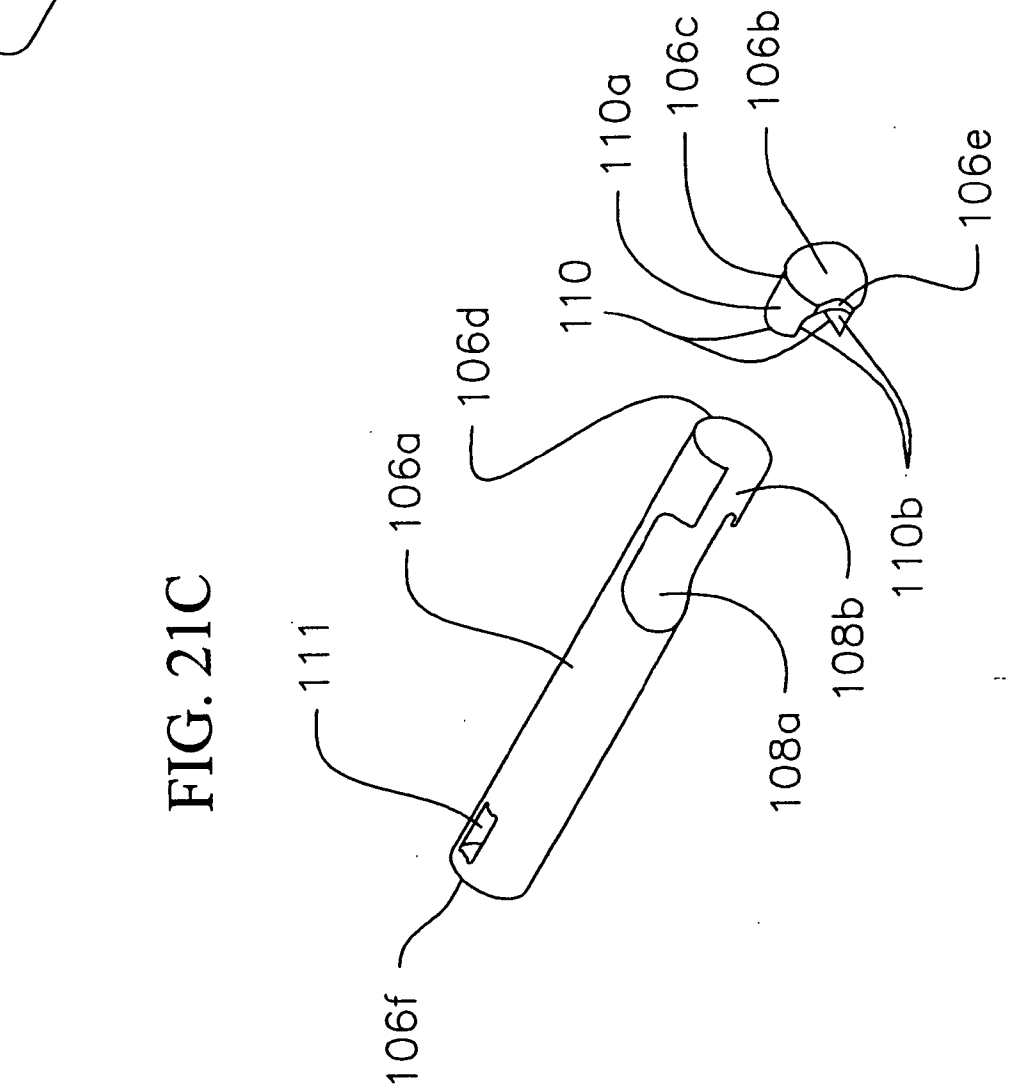

FIG. 21C

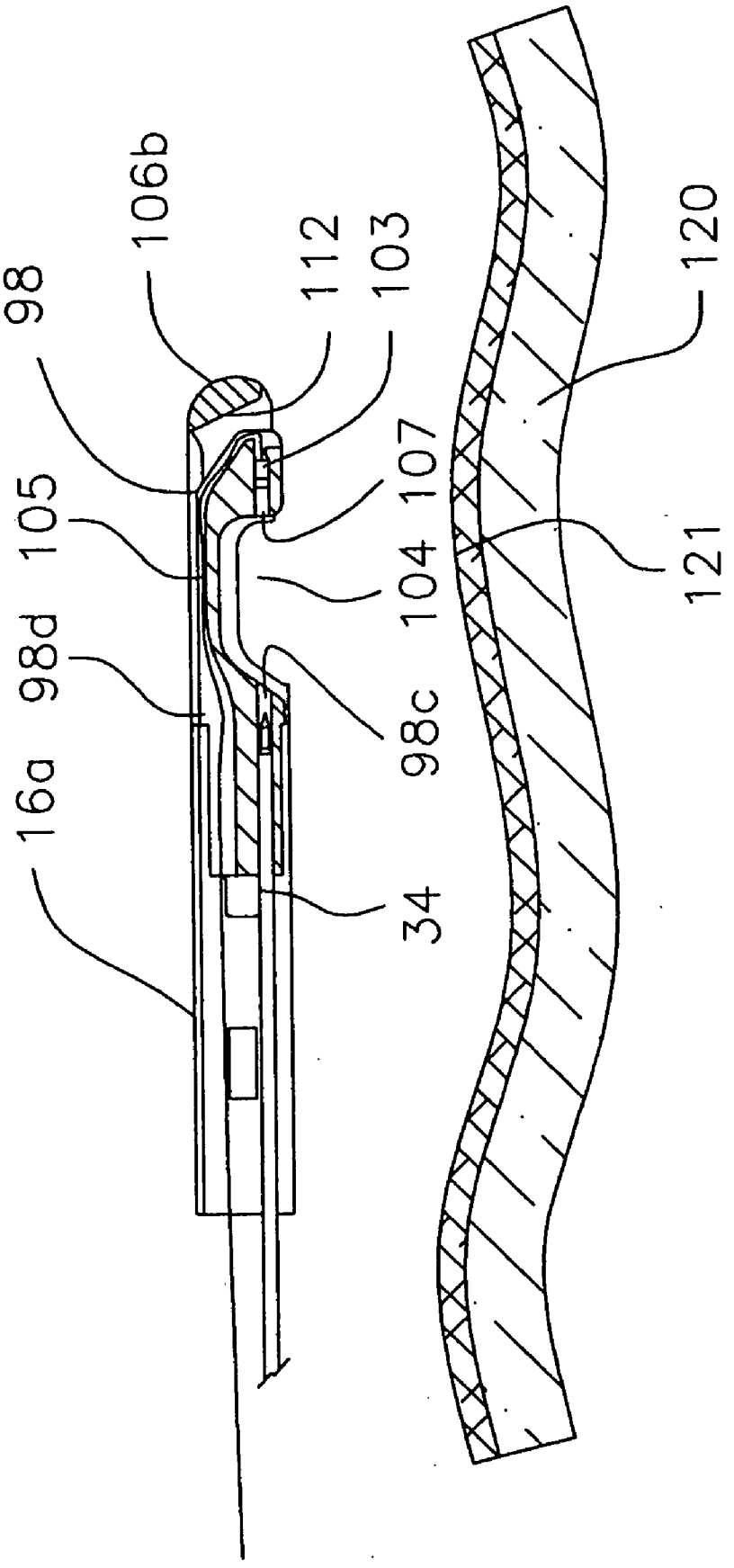

FIG. 22A

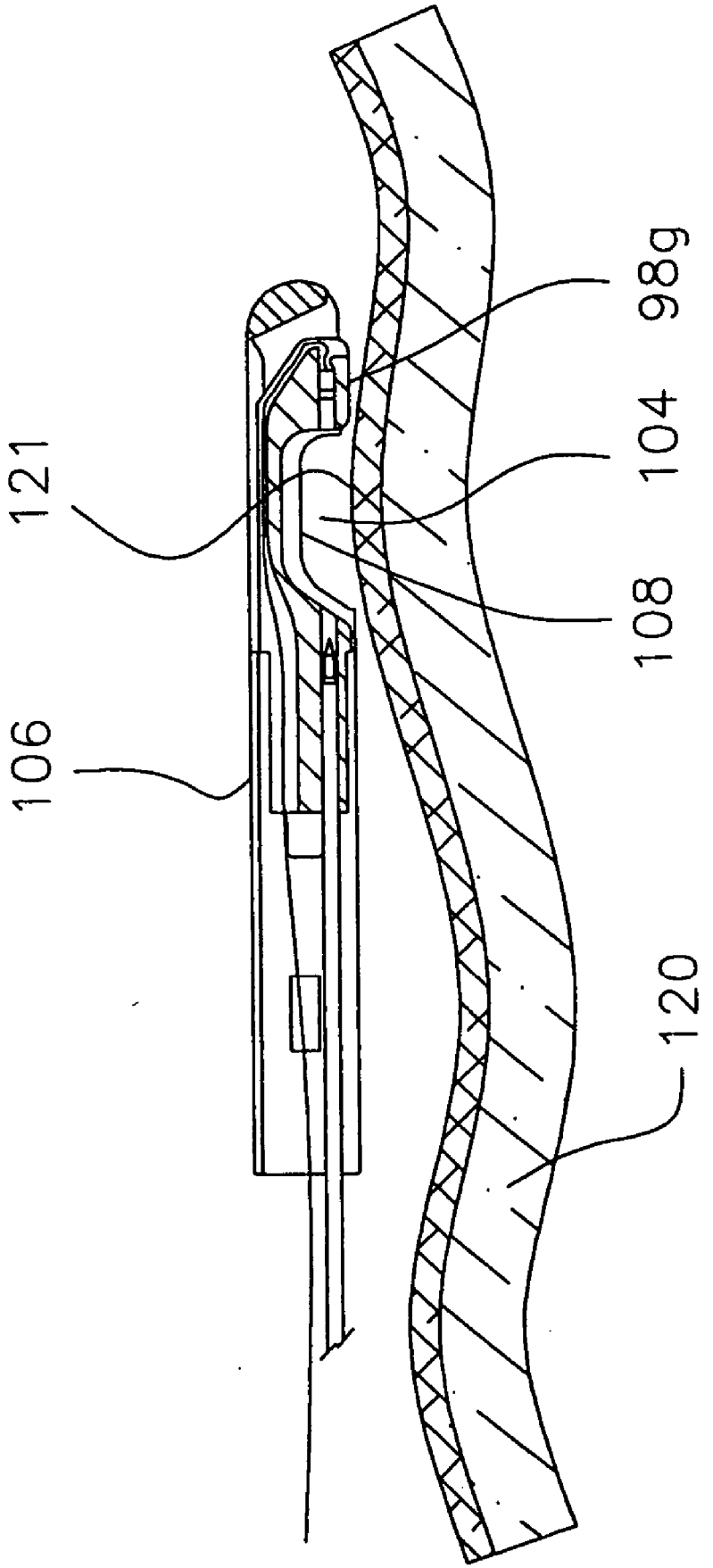

FIG. 22B

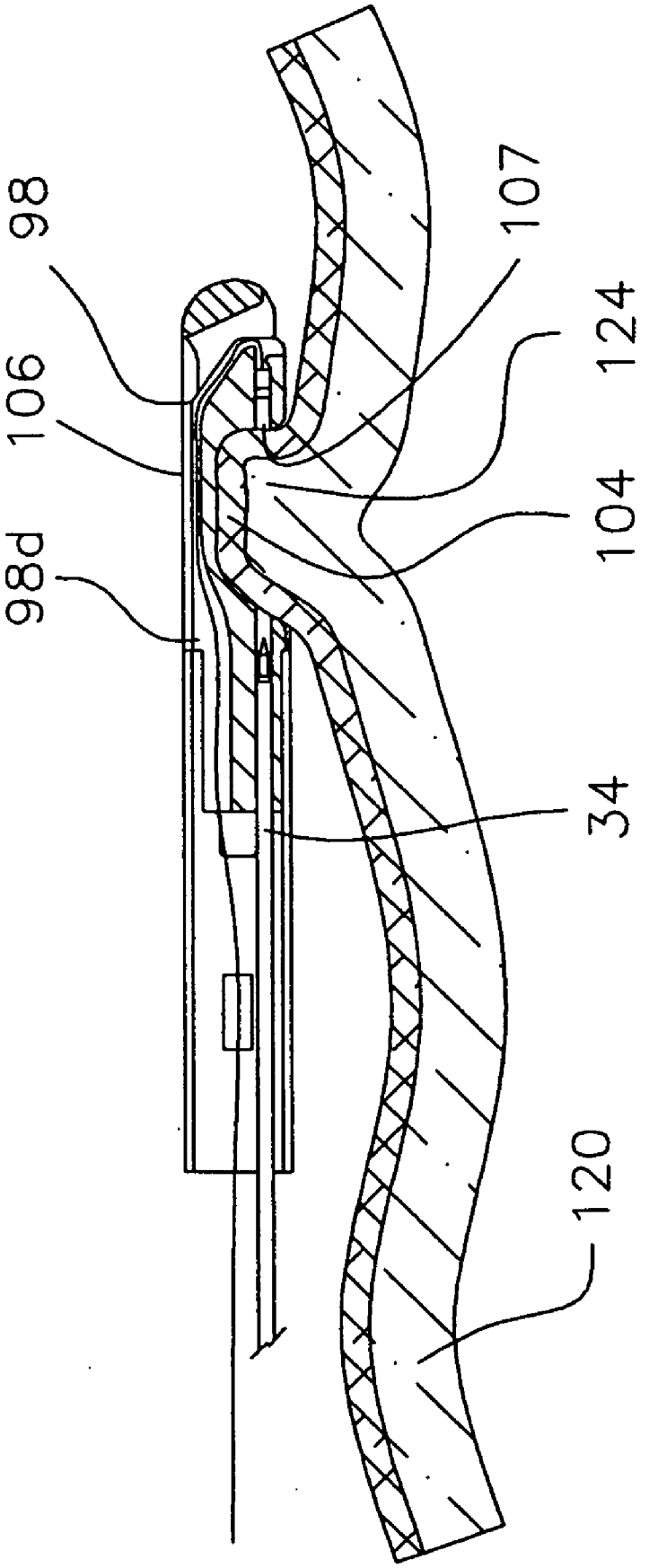

FIG. 22C

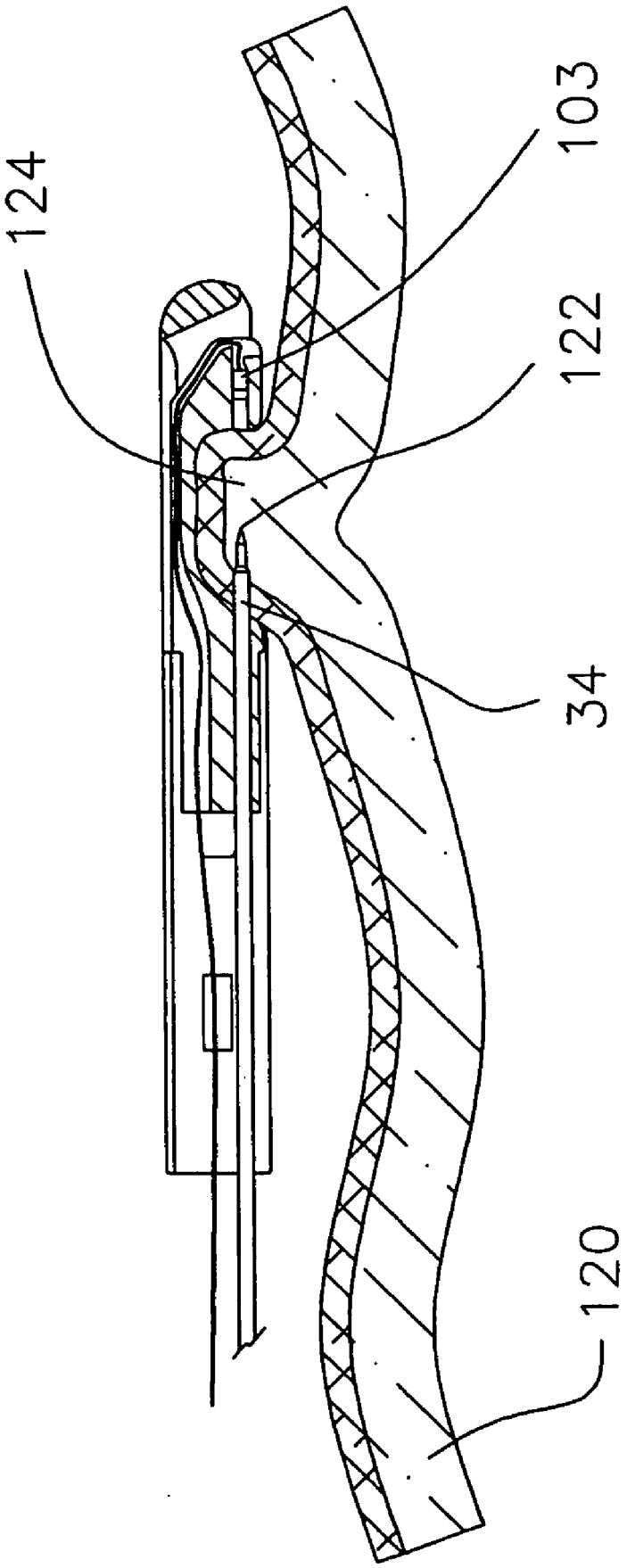

FIG. 22D

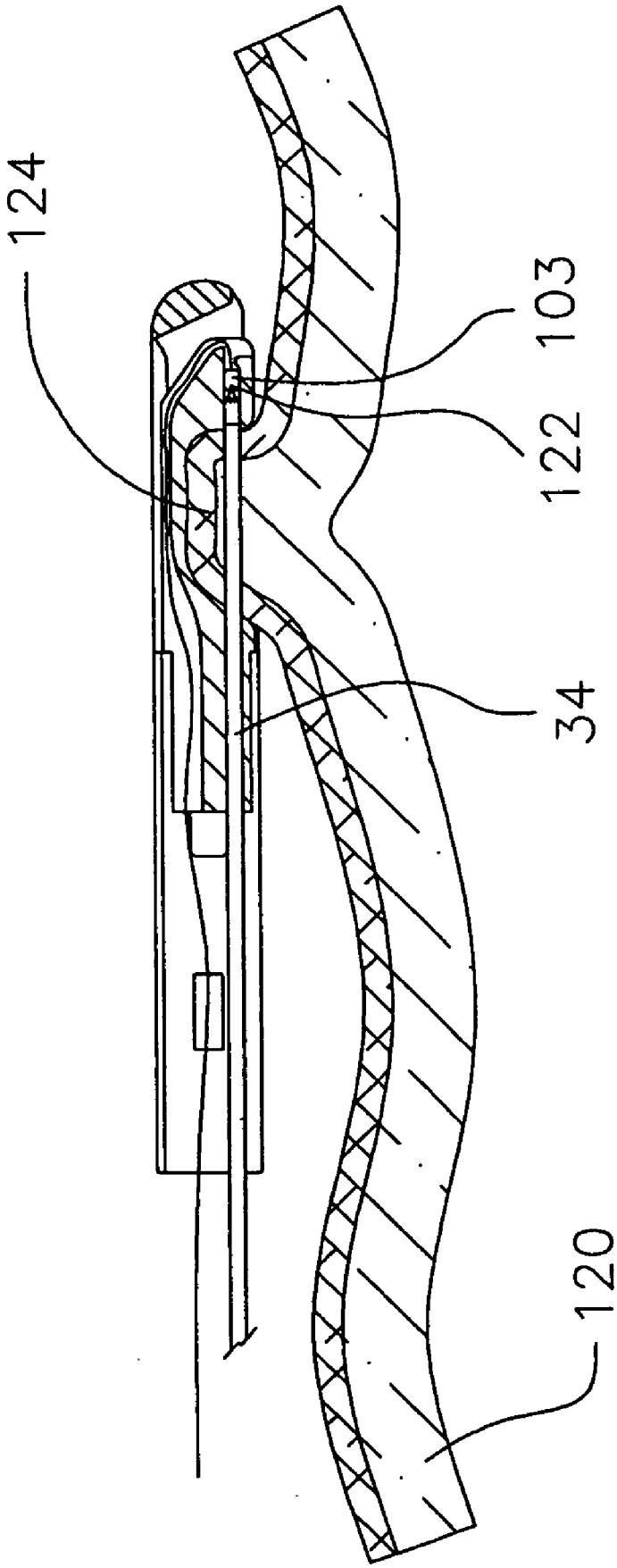

FIG. 22E

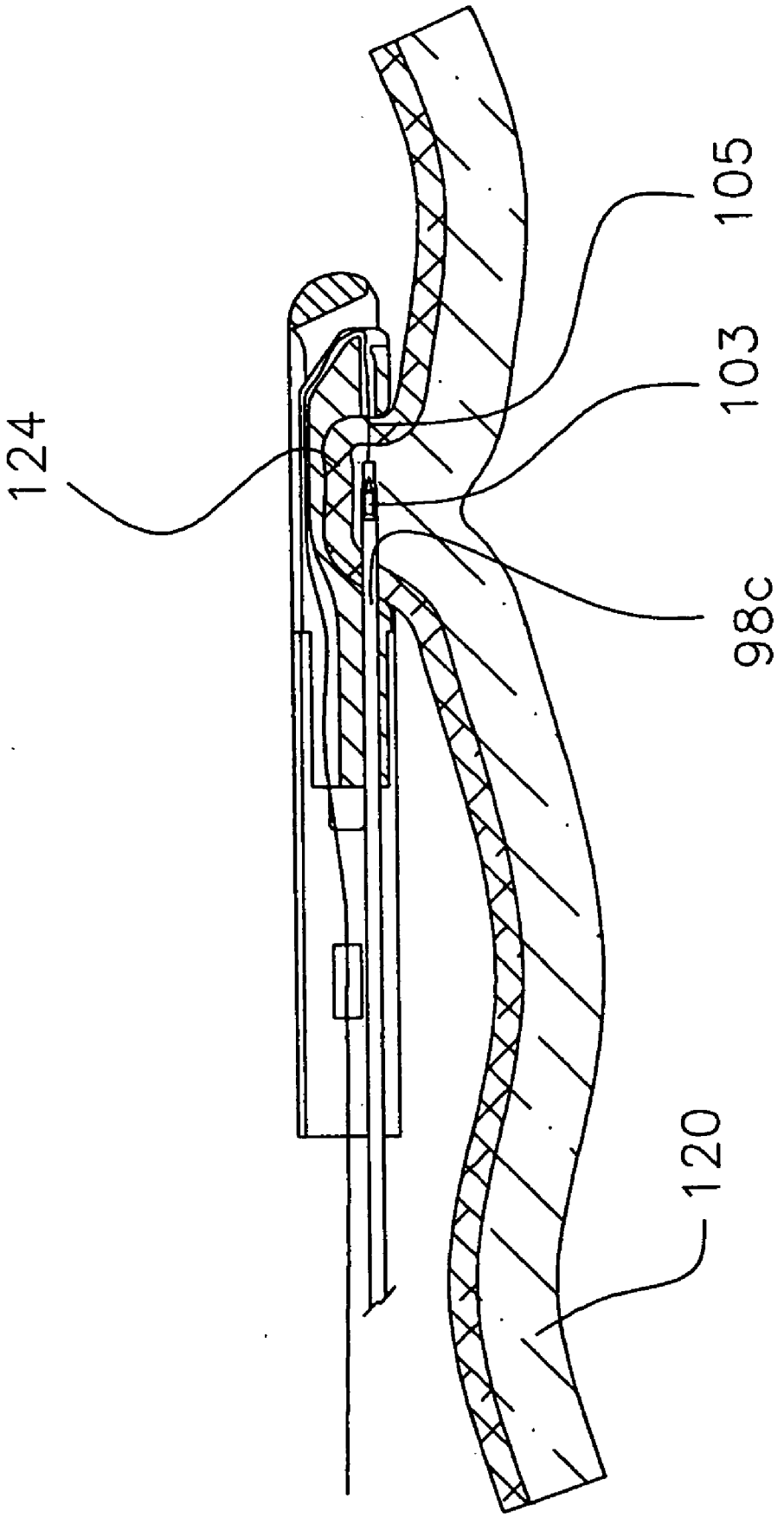

FIG. 22F

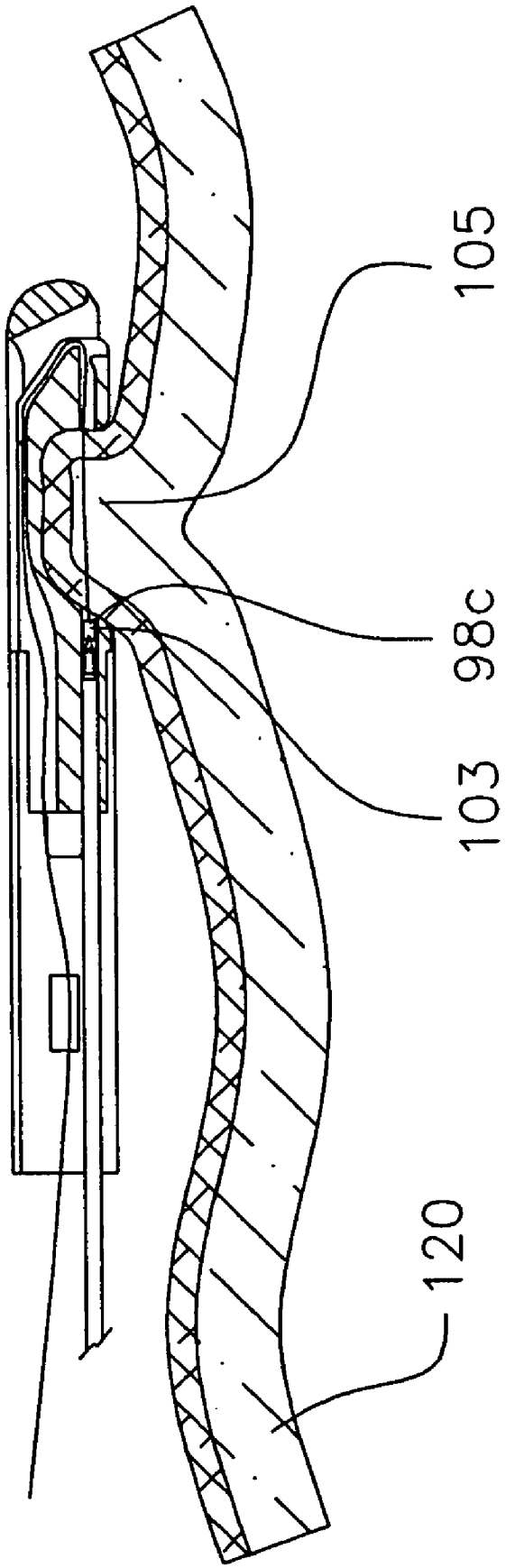

FIG. 22G

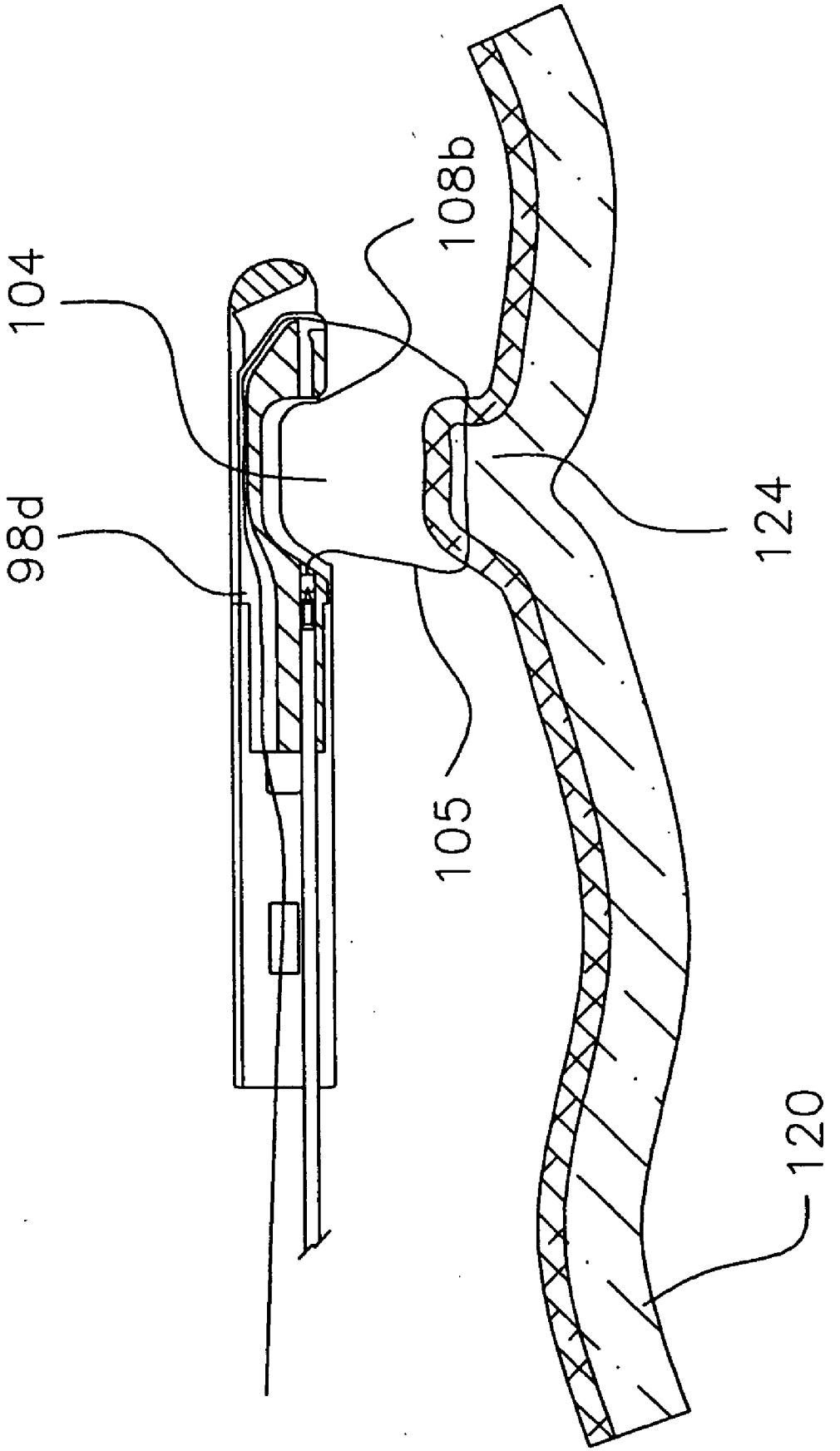

FIG. 22H

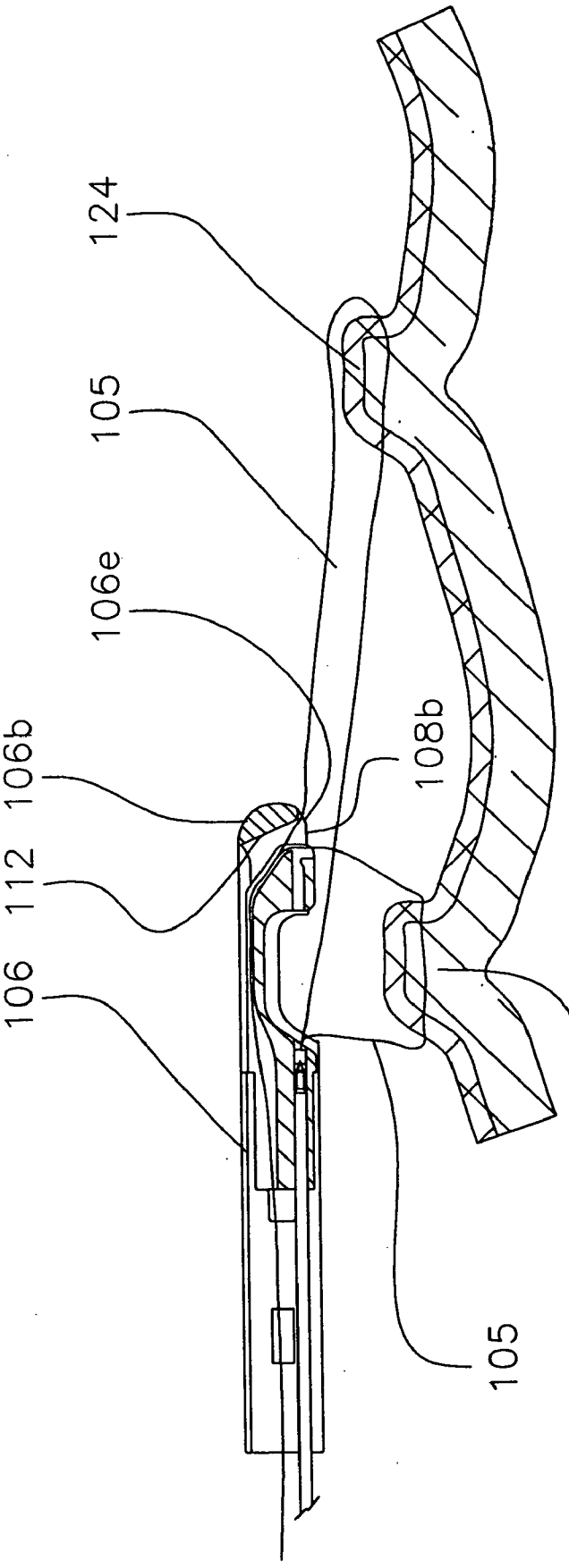

FIG. 22I

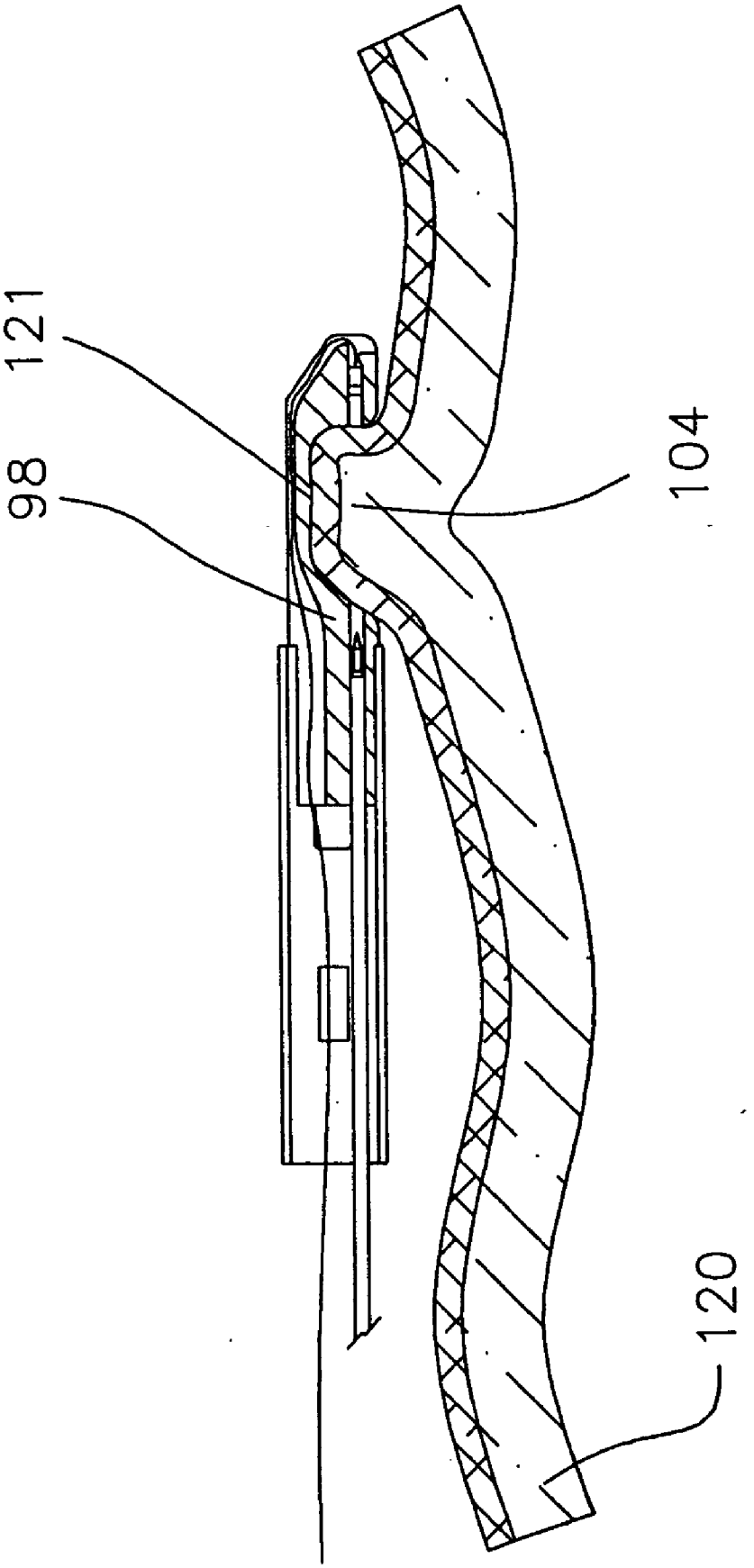

FIG. 23

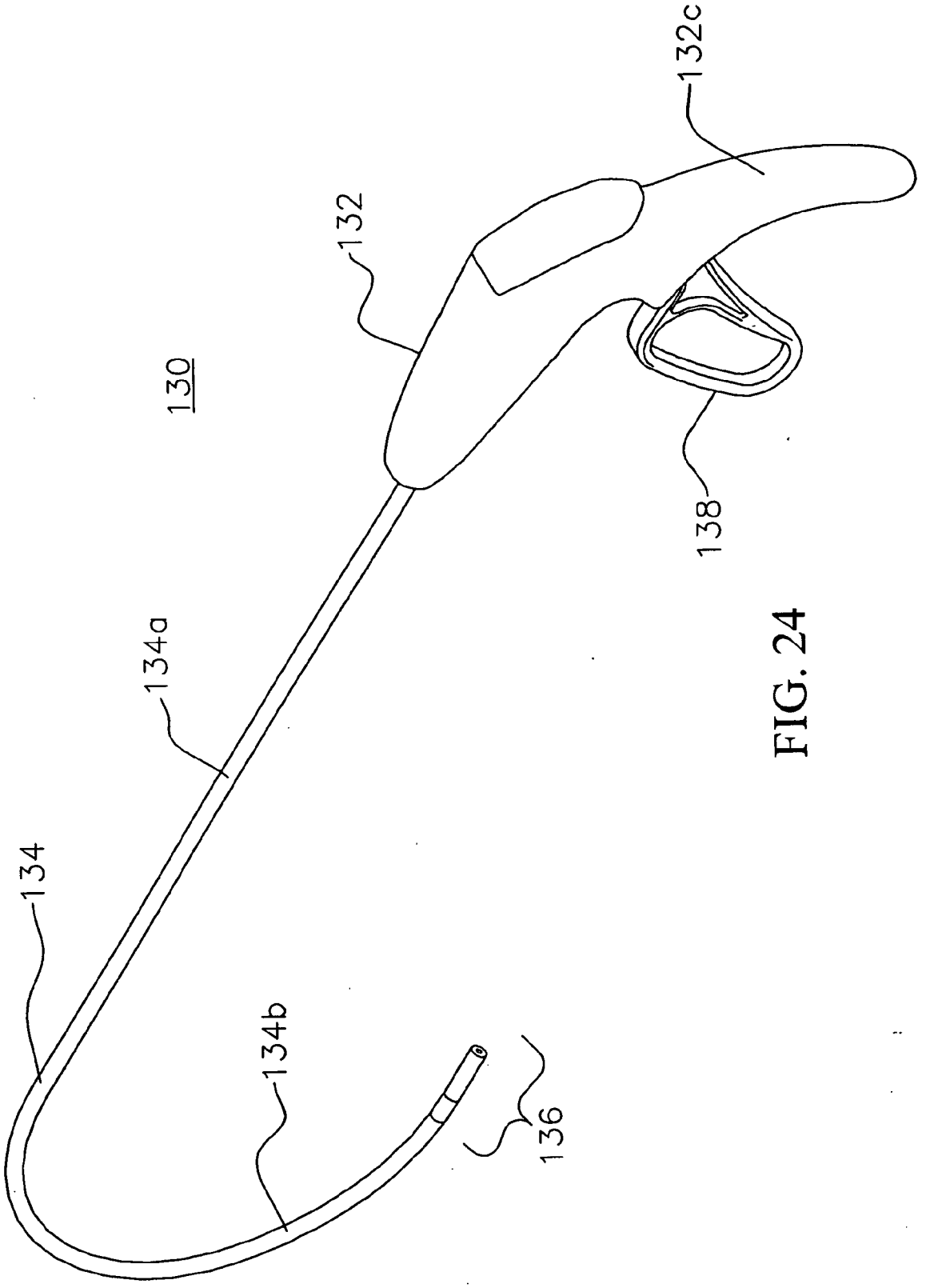

FIG. 24

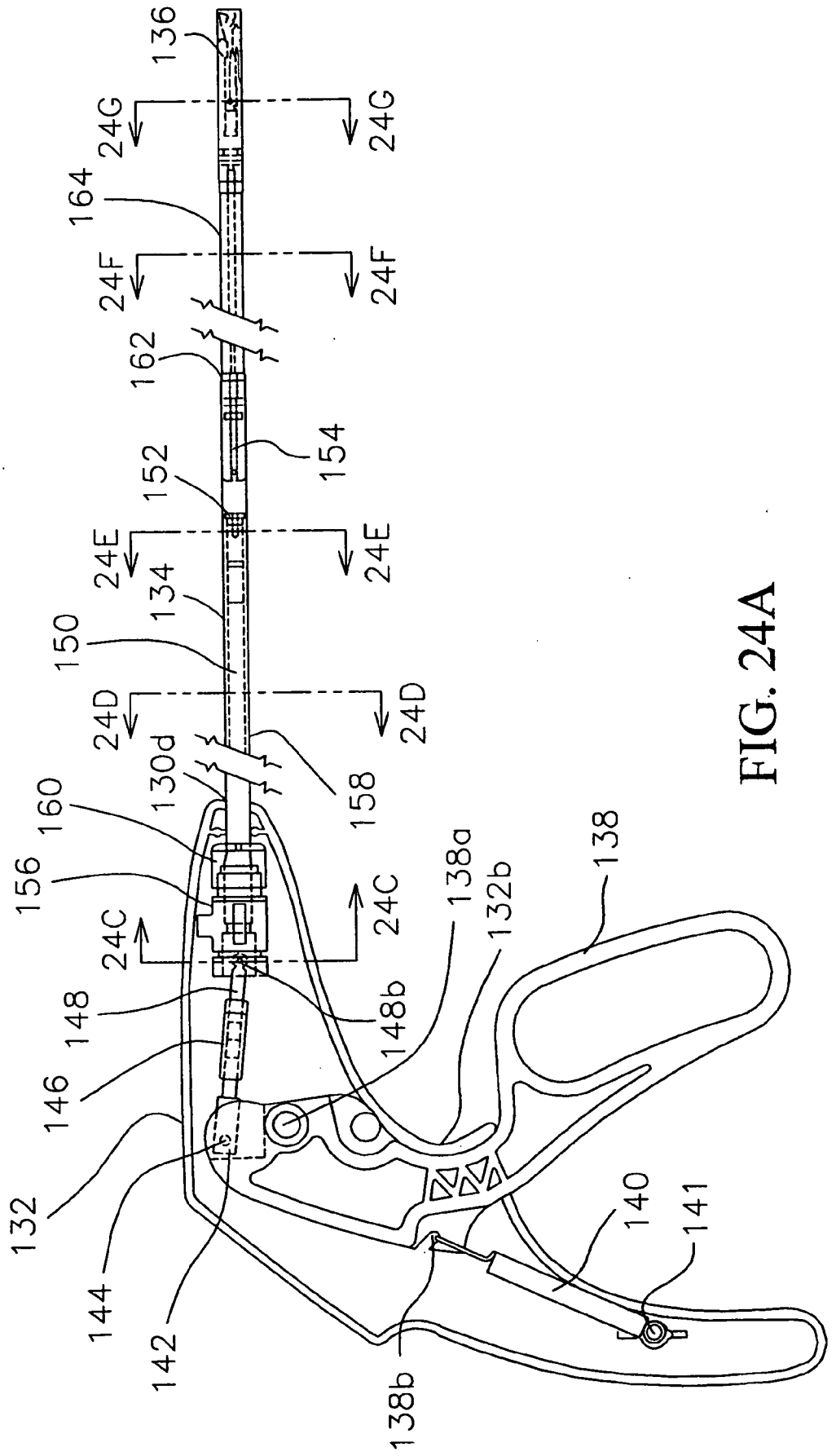
136
24G
24G
164
24F
24F
162
154
152
24E
24E
134
150
24D
24D
130d
158
160
156
24C
24C
138a
132b
138
148
148b
146
132
144
142
140
141
138b

FIG. 24A

FIG. 24B

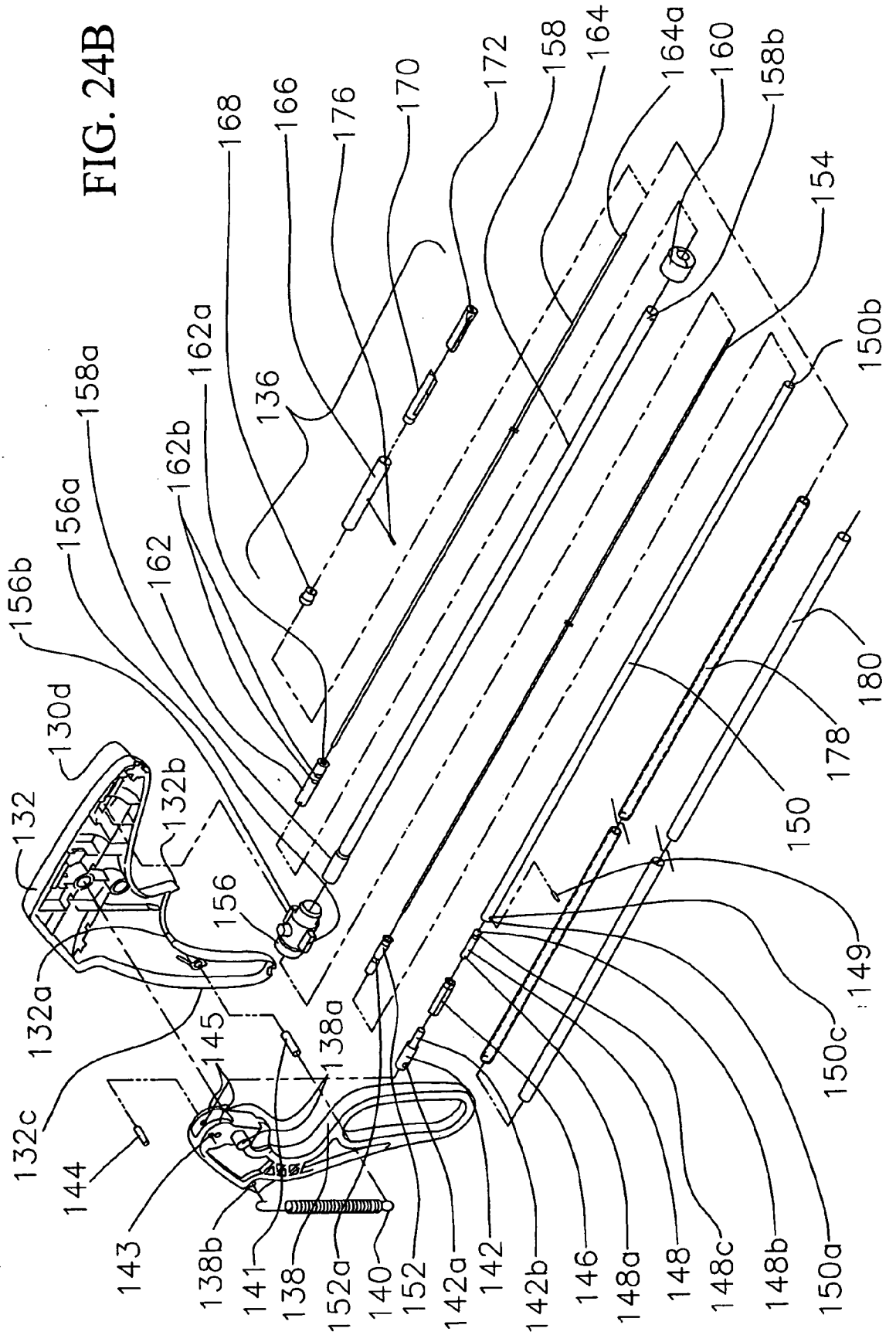
132c
144
143
132a
132
130d
156b
156a
158a
162
162b
162a
168
166
136
176
170
172
158
164
164a
160
158b
154
150b
132b
156
145
138a
138b
141
138
152a
140
152
142a
142
142b
146
148a
148
148c
148b
150a
150c
149
150
178
180

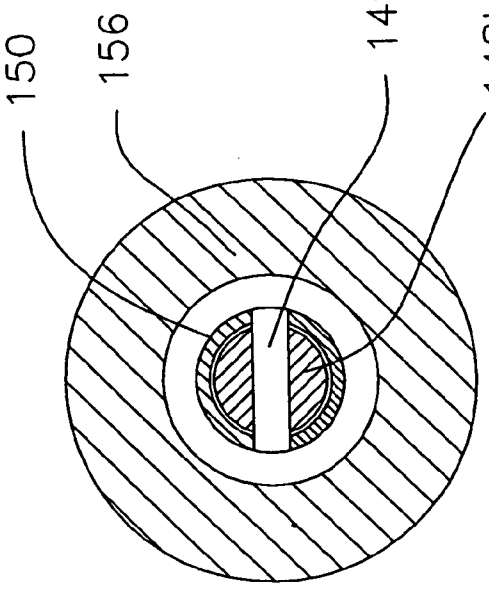

FIG. 24C

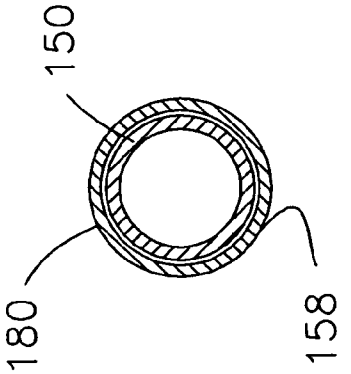

FIG. 24D

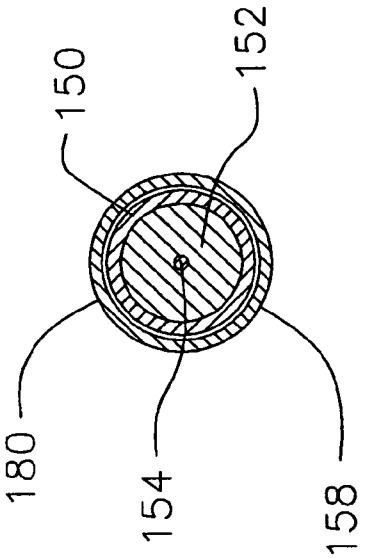

FIG. 24E

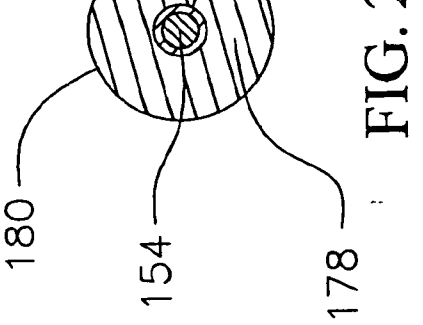

FIG. 24F

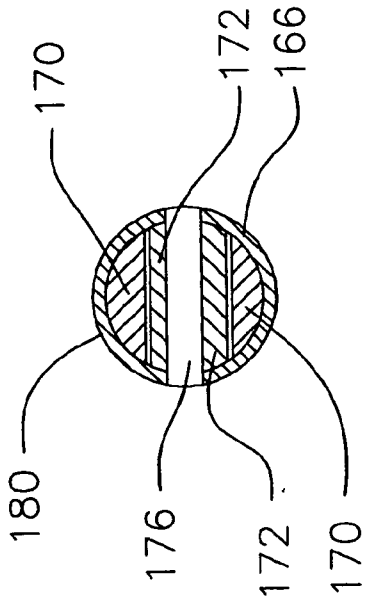

FIG. 24G

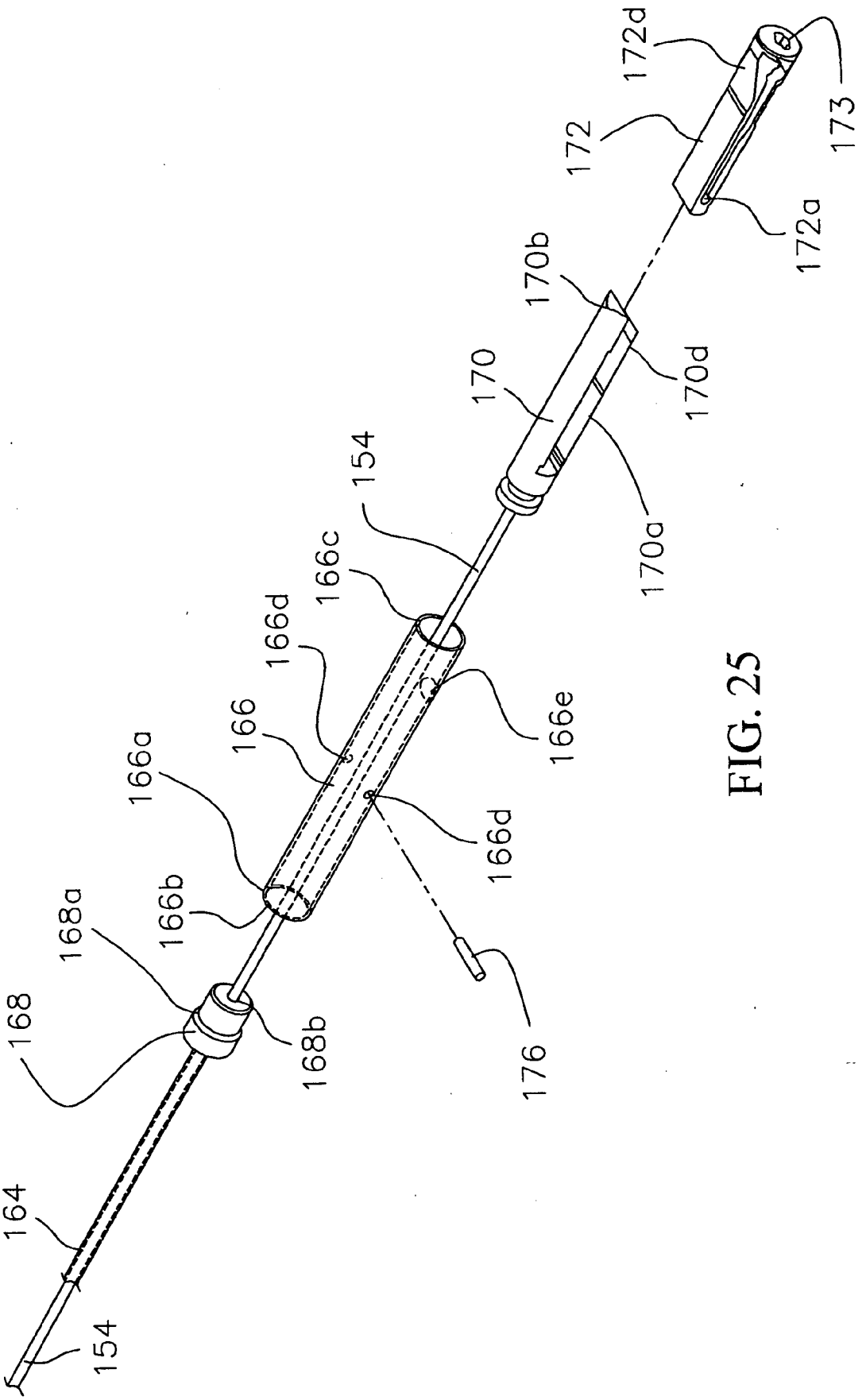
172d
173
172
172a
170b
170d
170
154
170a
166c
166d
166
166e
166a
166d
166b
168a
168
168b
176
164
154

FIG. 25

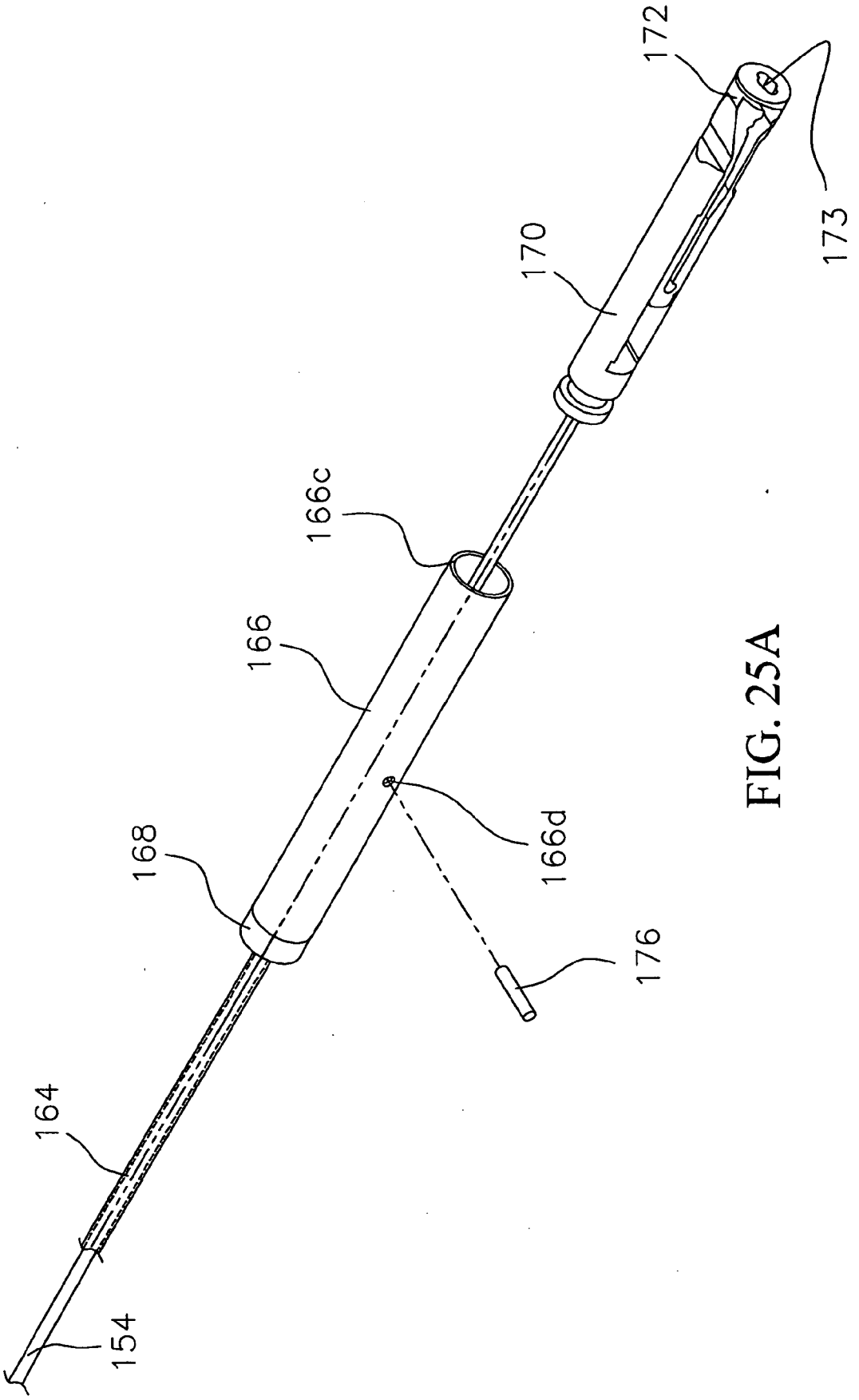

FIG. 25A

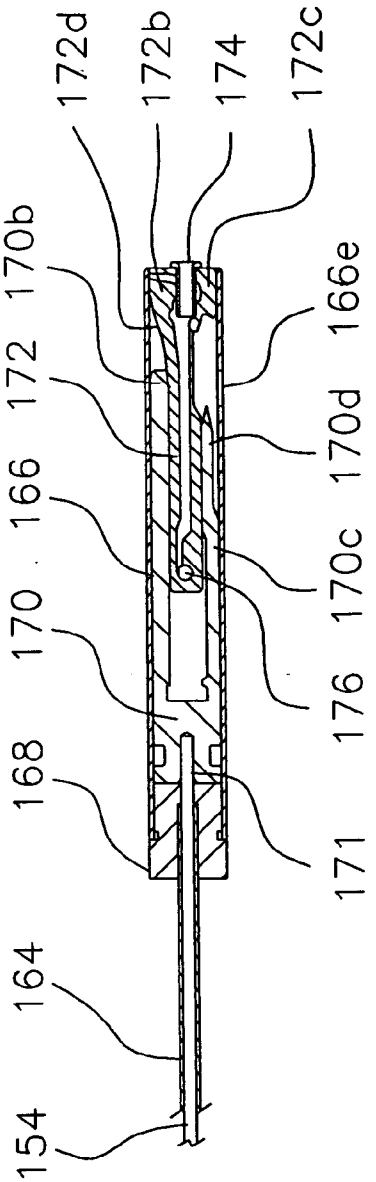

FIG. 25C

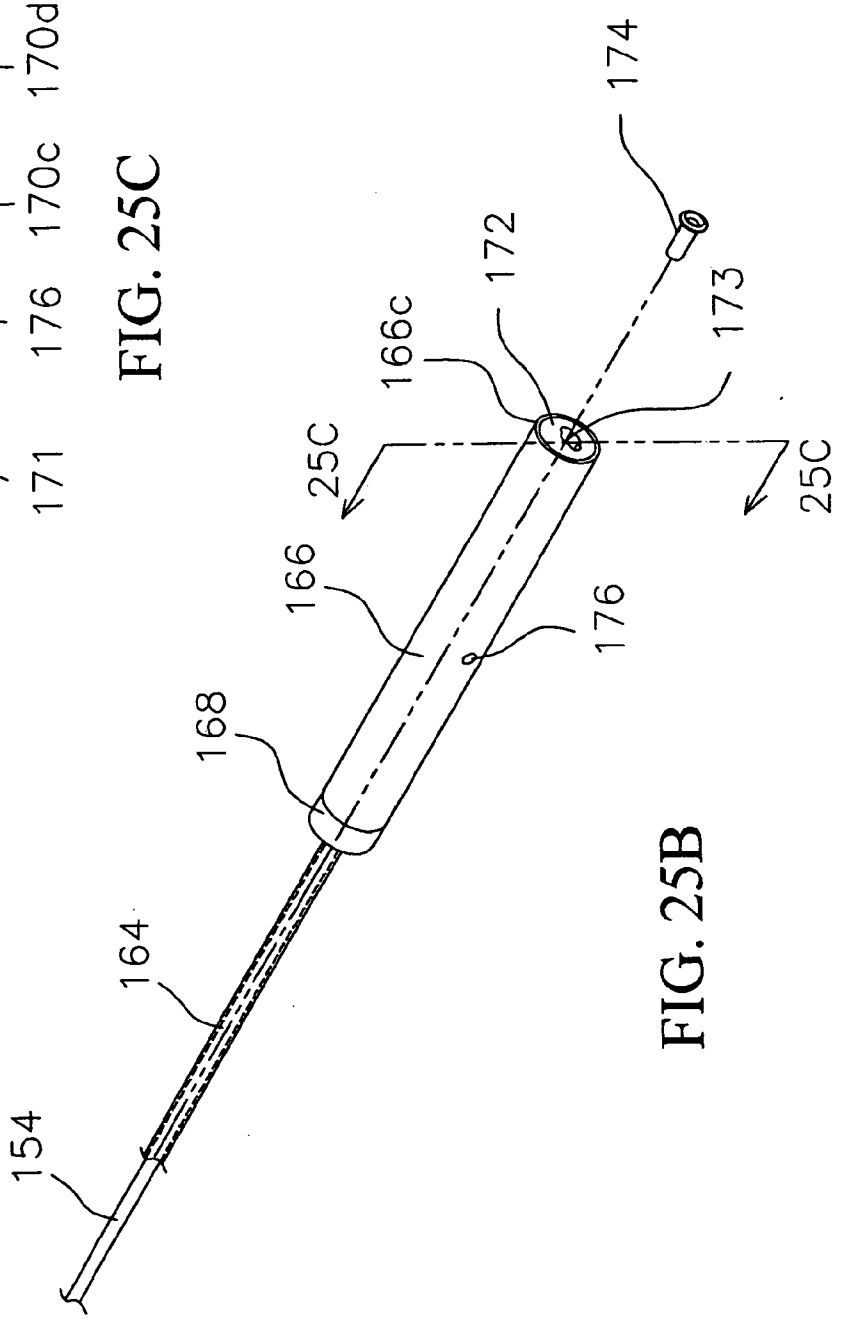

FIG. 25B

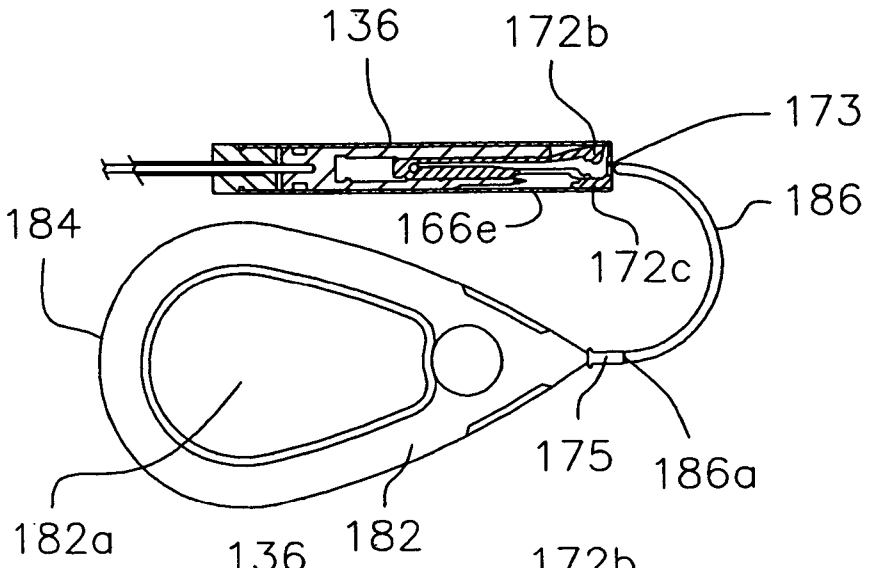

FIG. 26A

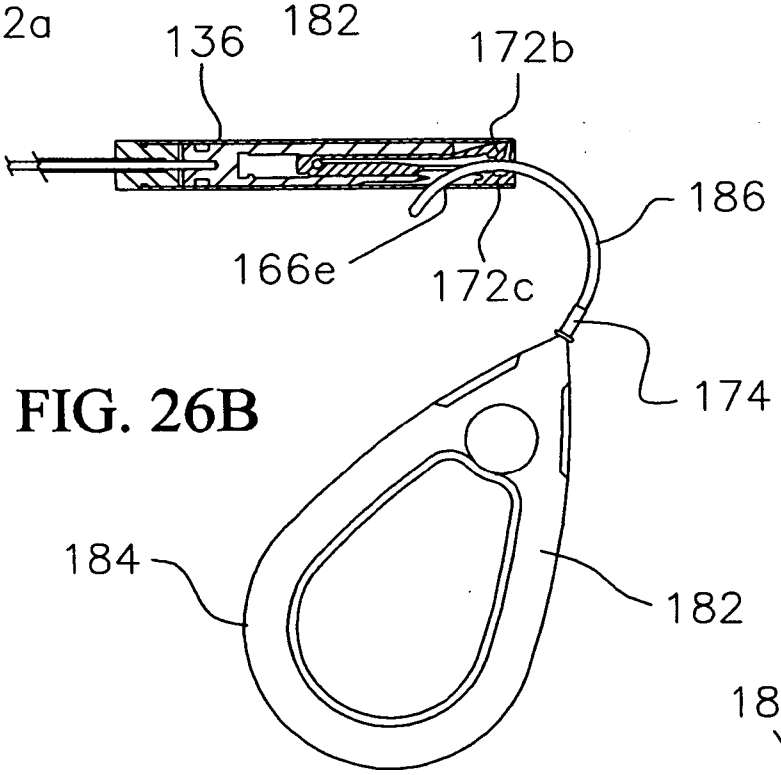

FIG. 26B

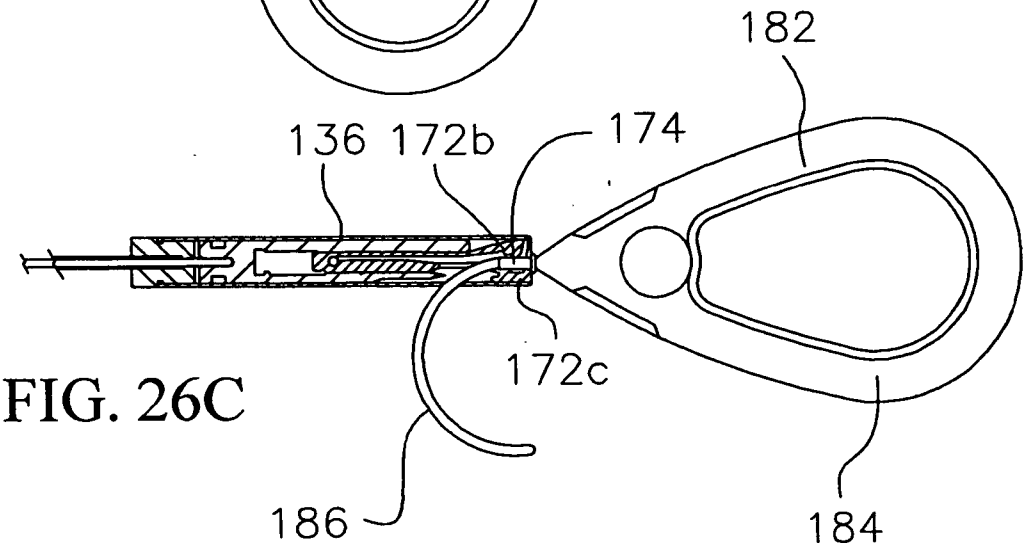

FIG. 26C

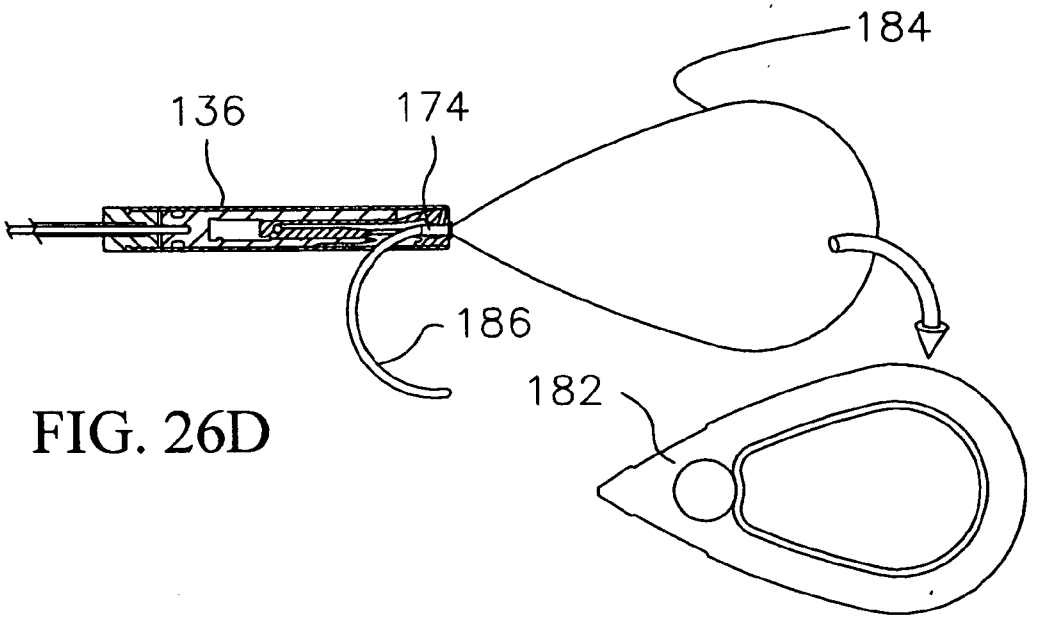

FIG. 26D

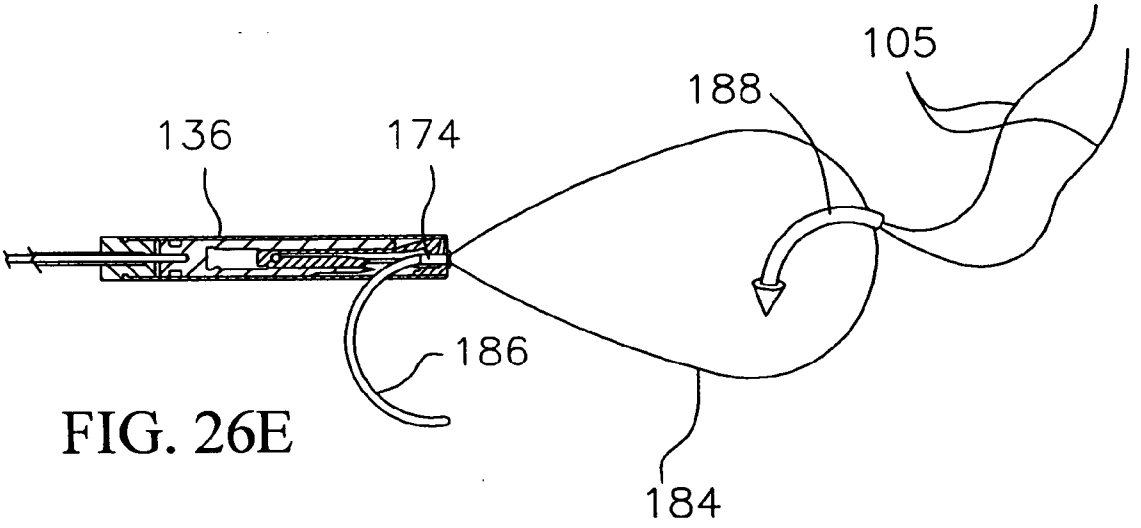

FIG. 26E

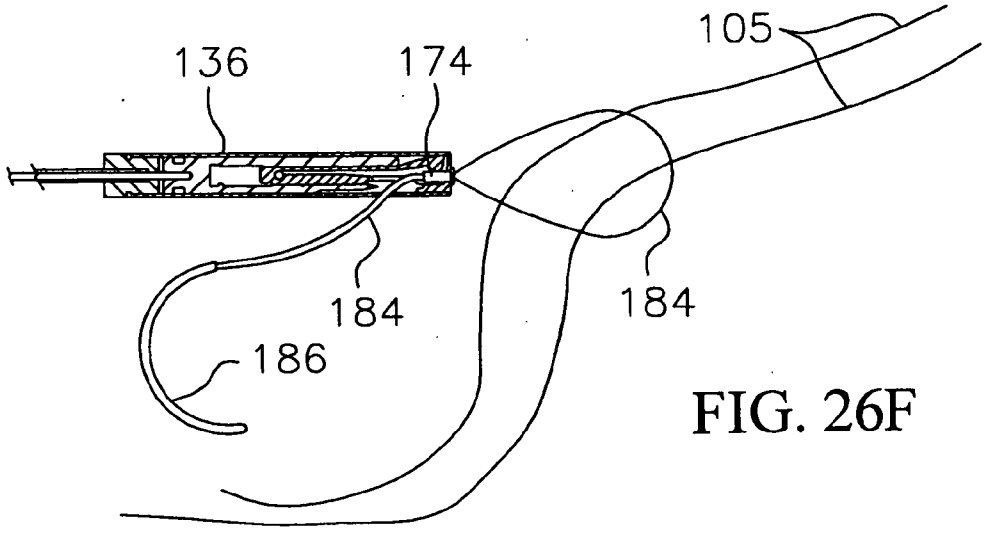

FIG. 26F

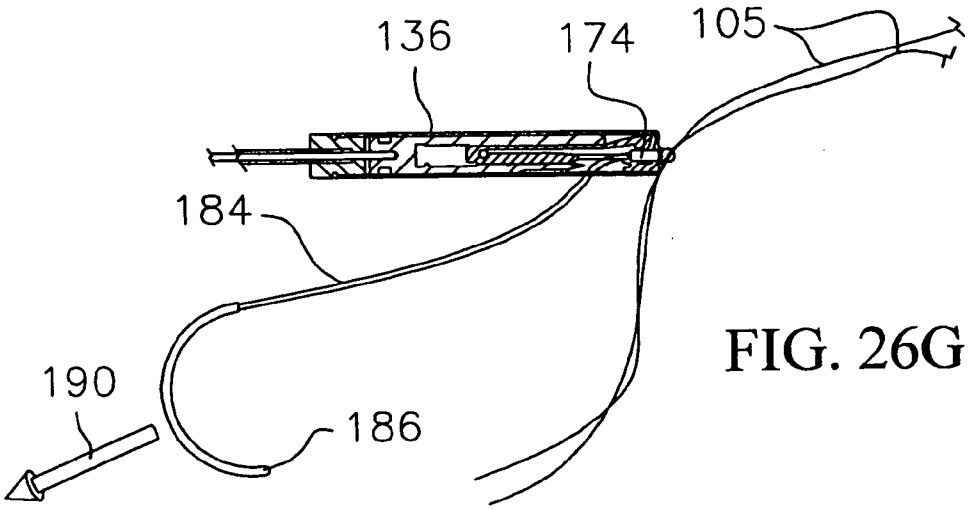

FIG. 26G

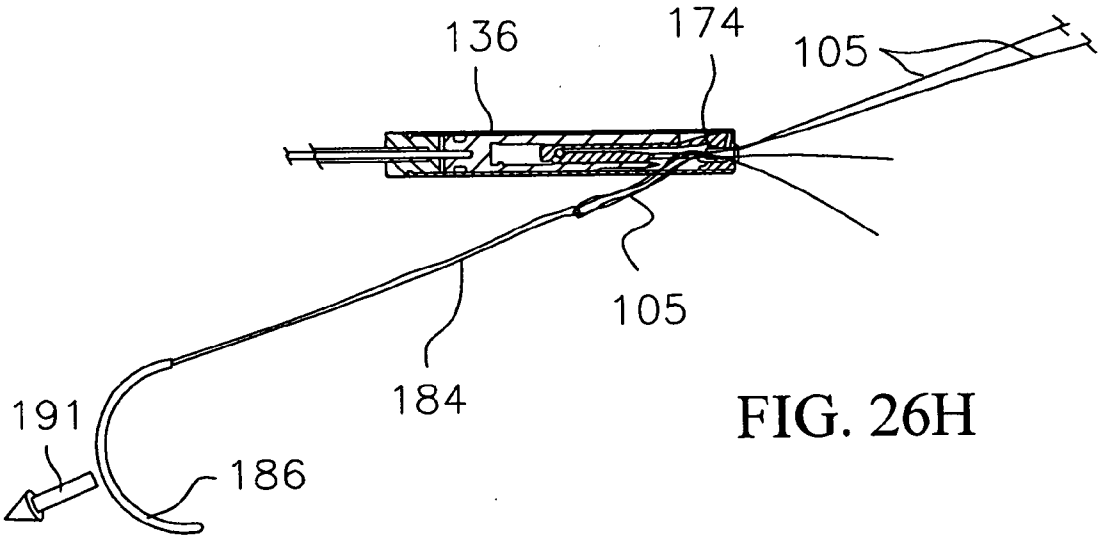

FIG. 26H

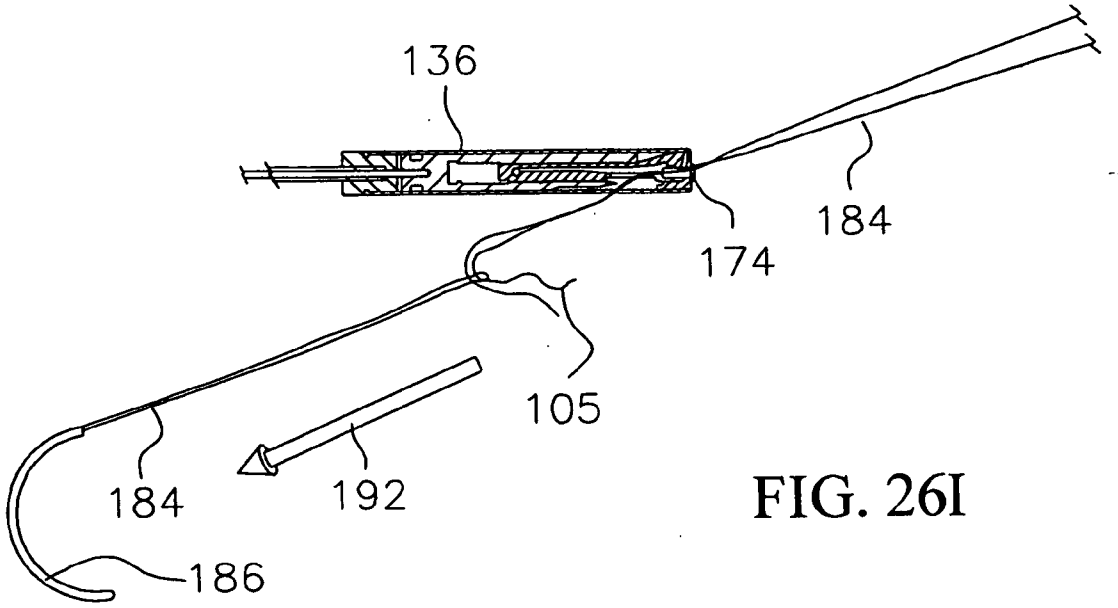

FIG. 26I

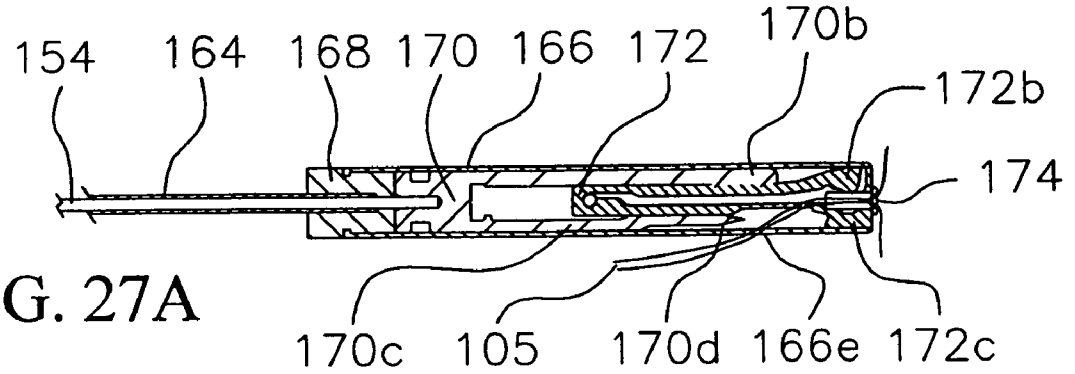

FIG. 27A

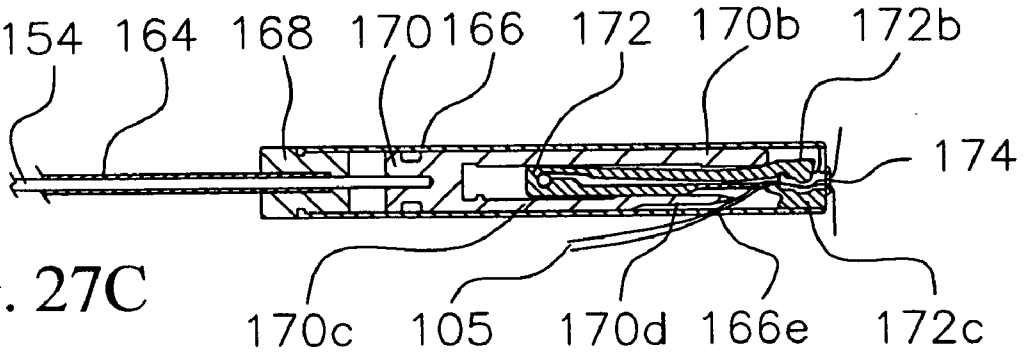

FIG. 27C

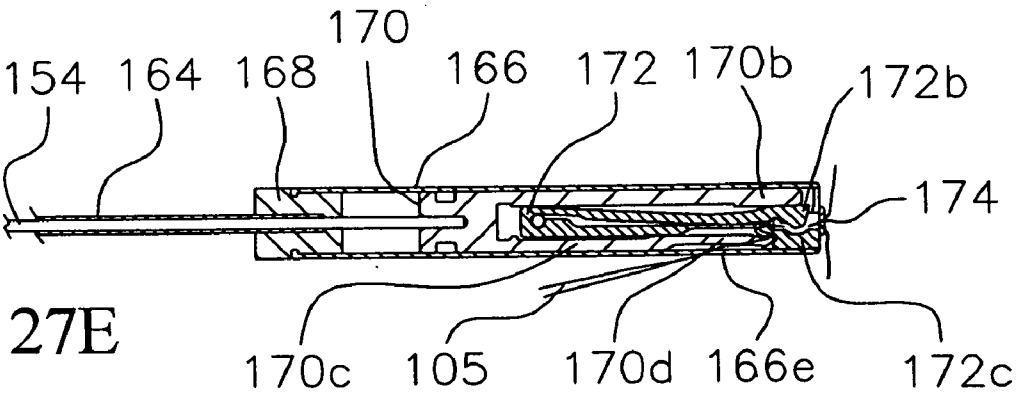

FIG. 27E

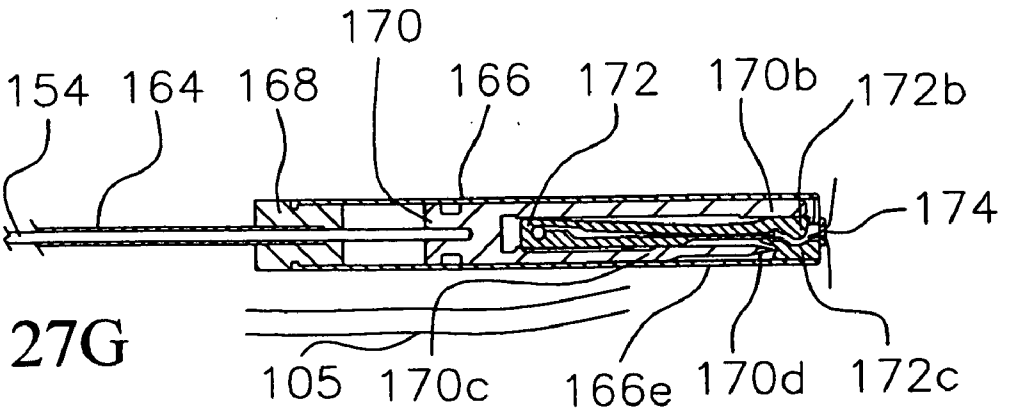

FIG. 27G

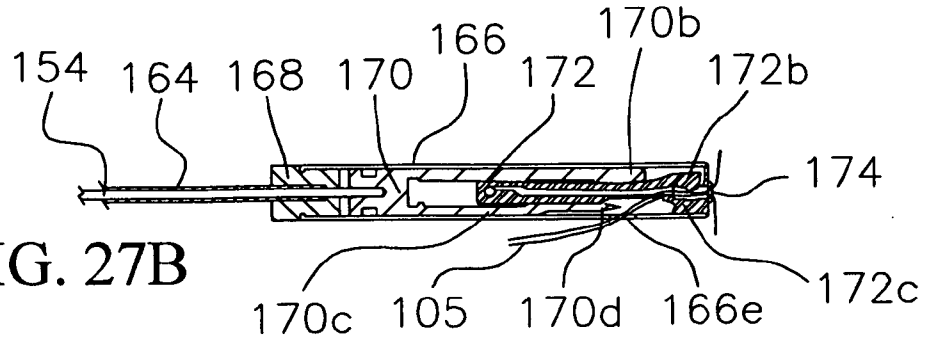

FIG. 27B

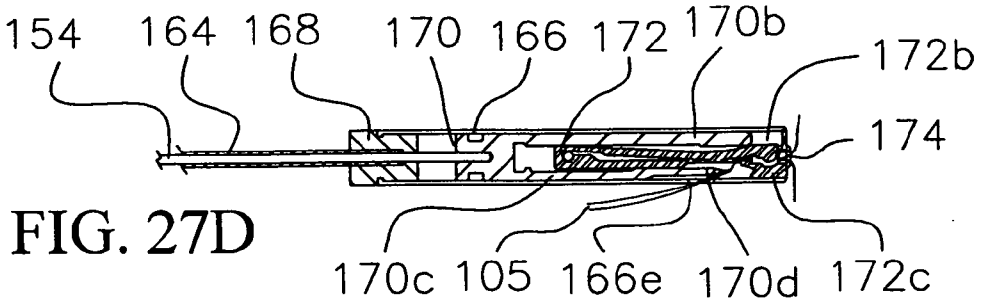

FIG. 27D

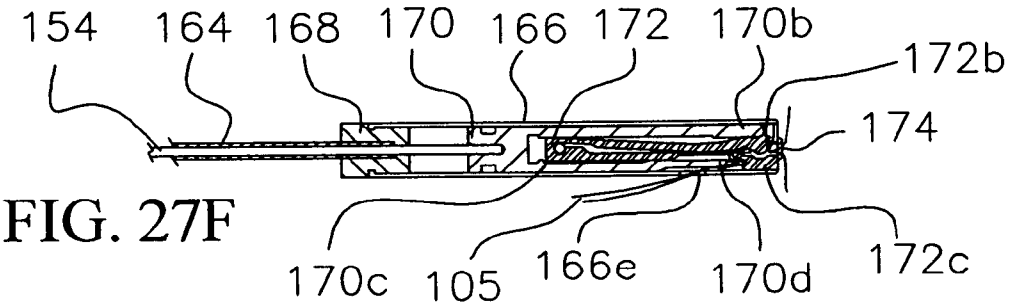

FIG. 27F

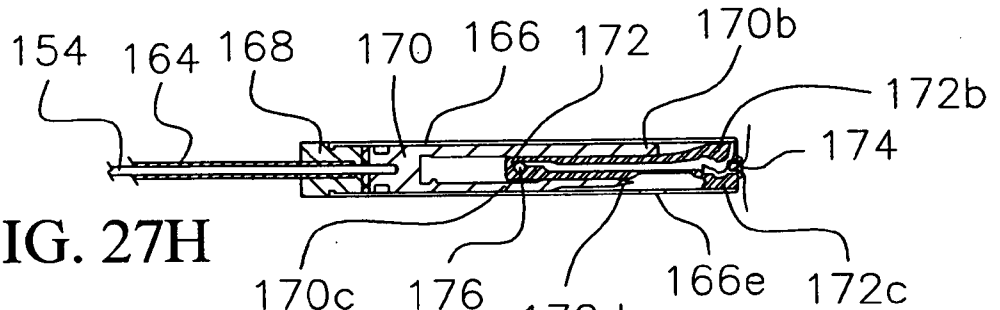

FIG. 27H

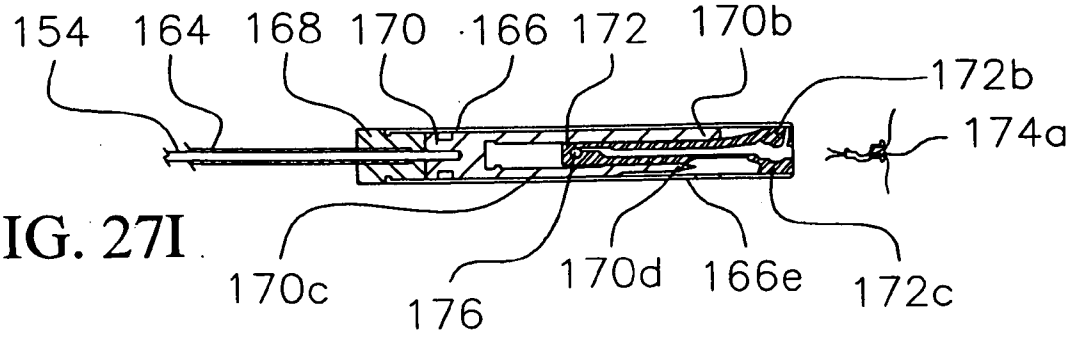

FIG. 27I

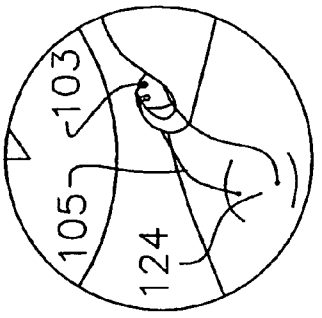

FIG. 28E

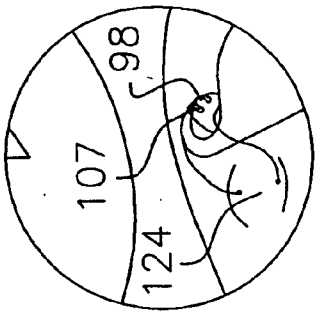

FIG. 28D

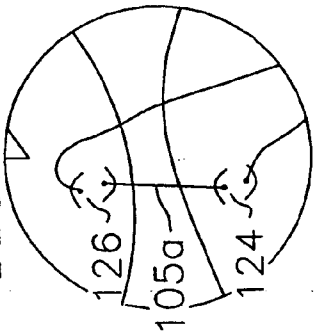

FIG. 28I

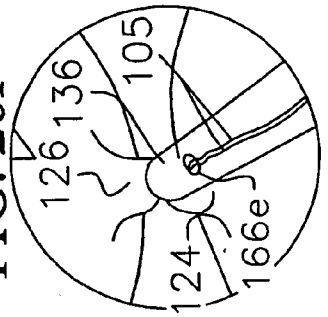

FIG. 28M

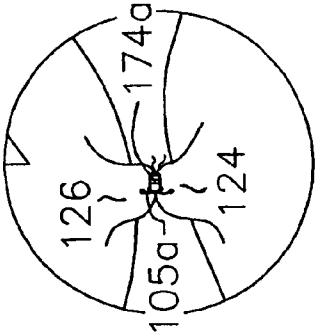

FIG. 28N

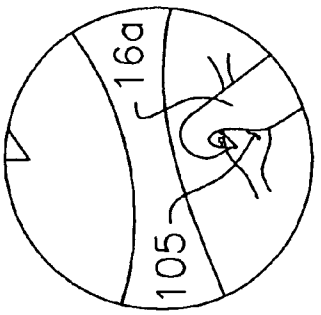

FIG. 28C

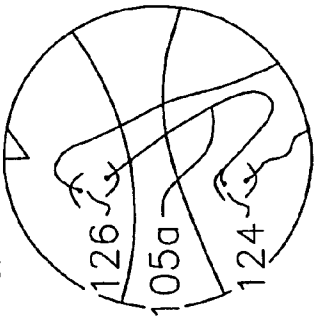

FIG. 28H

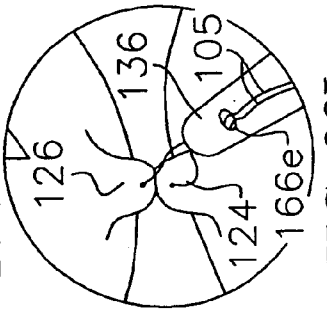

FIG. 28L

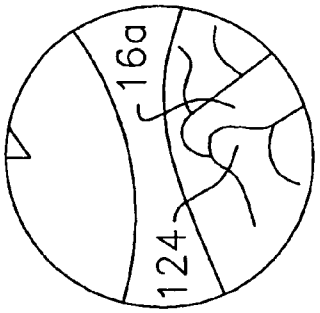

FIG. 28B

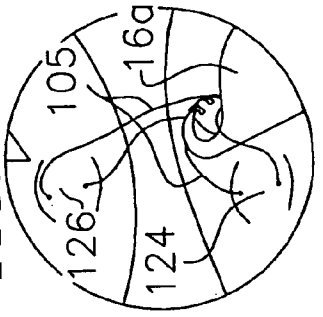

FIG. 28G

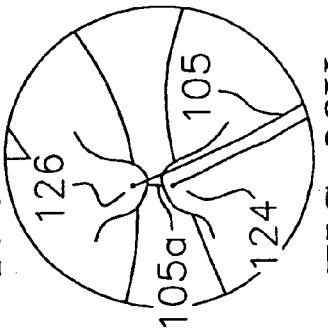

FIG. 28K

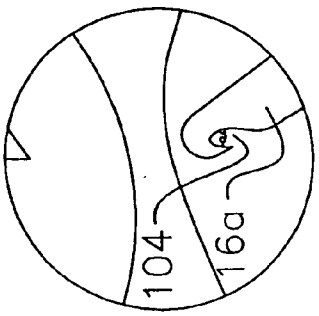

FIG. 28A

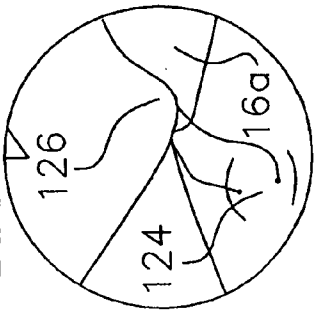

FIG. 28F

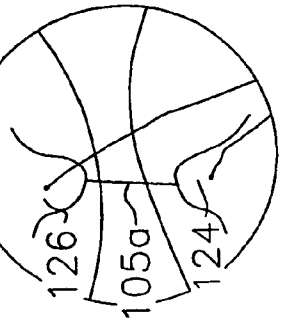

FIG. 28J

FIG. 29A

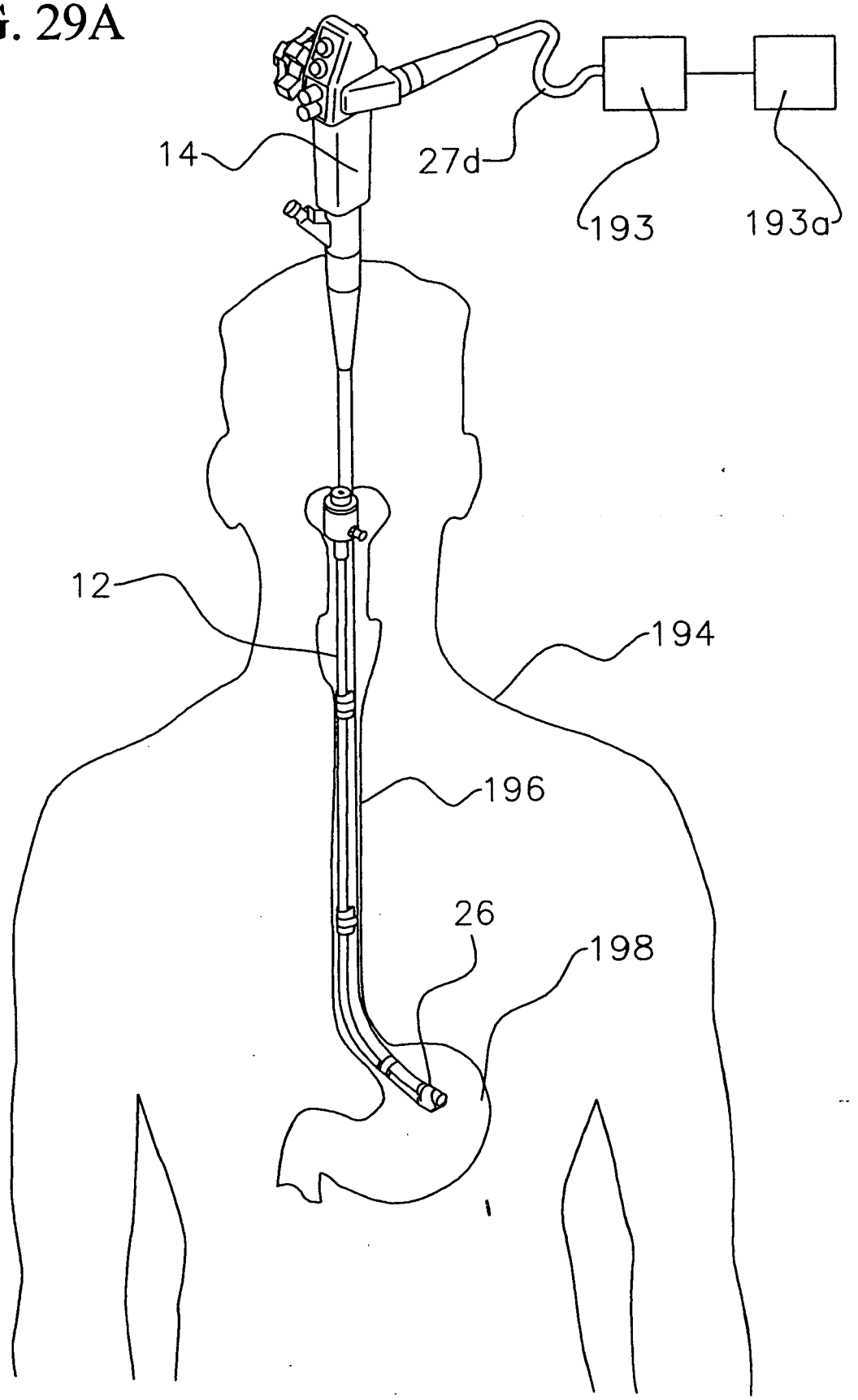

FIG. 29B

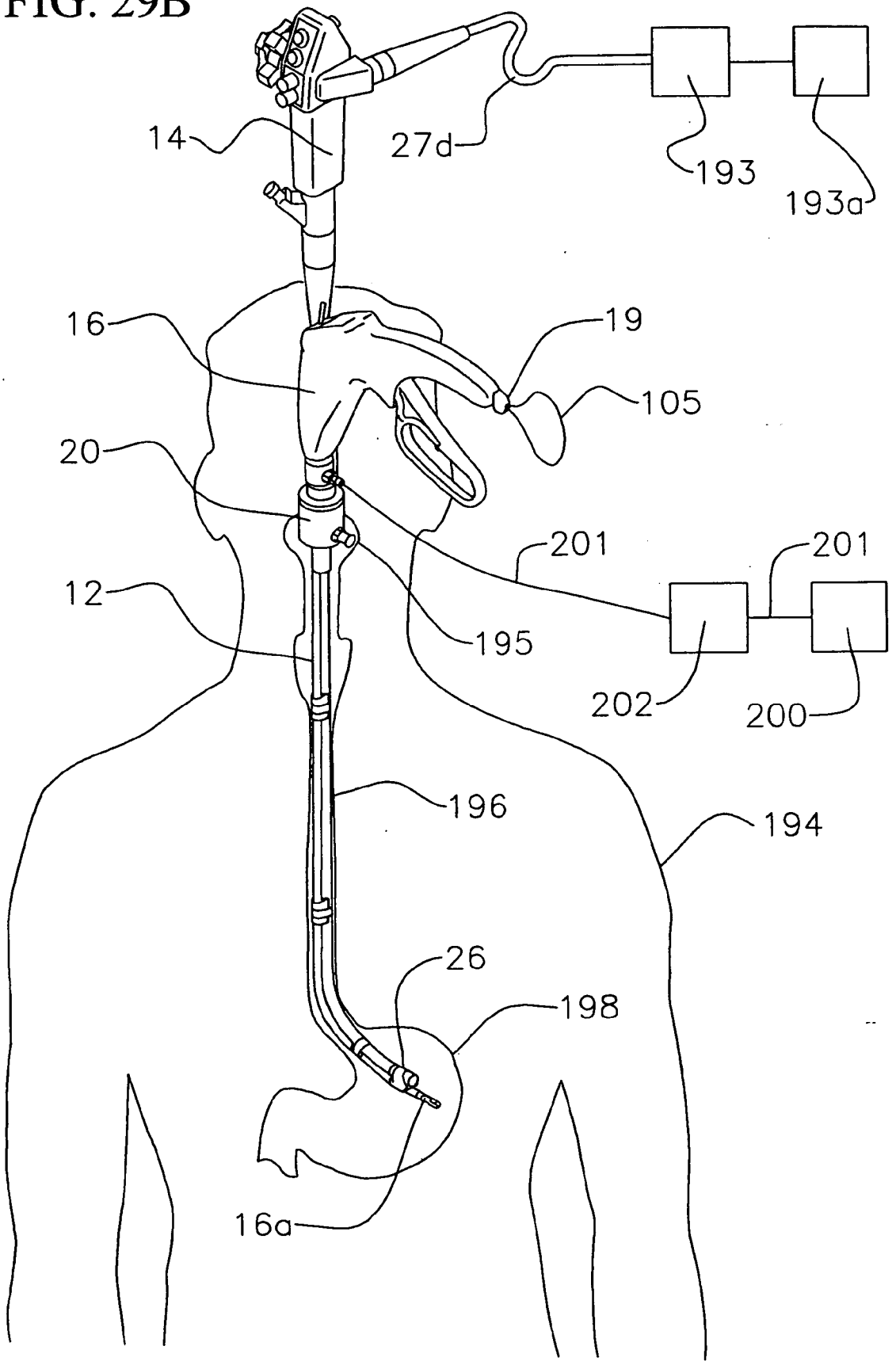
14
27d
193
193a
16
19
105
20
201
201
12
195
202
200
196
194
26
198
16a

FIG. 29C

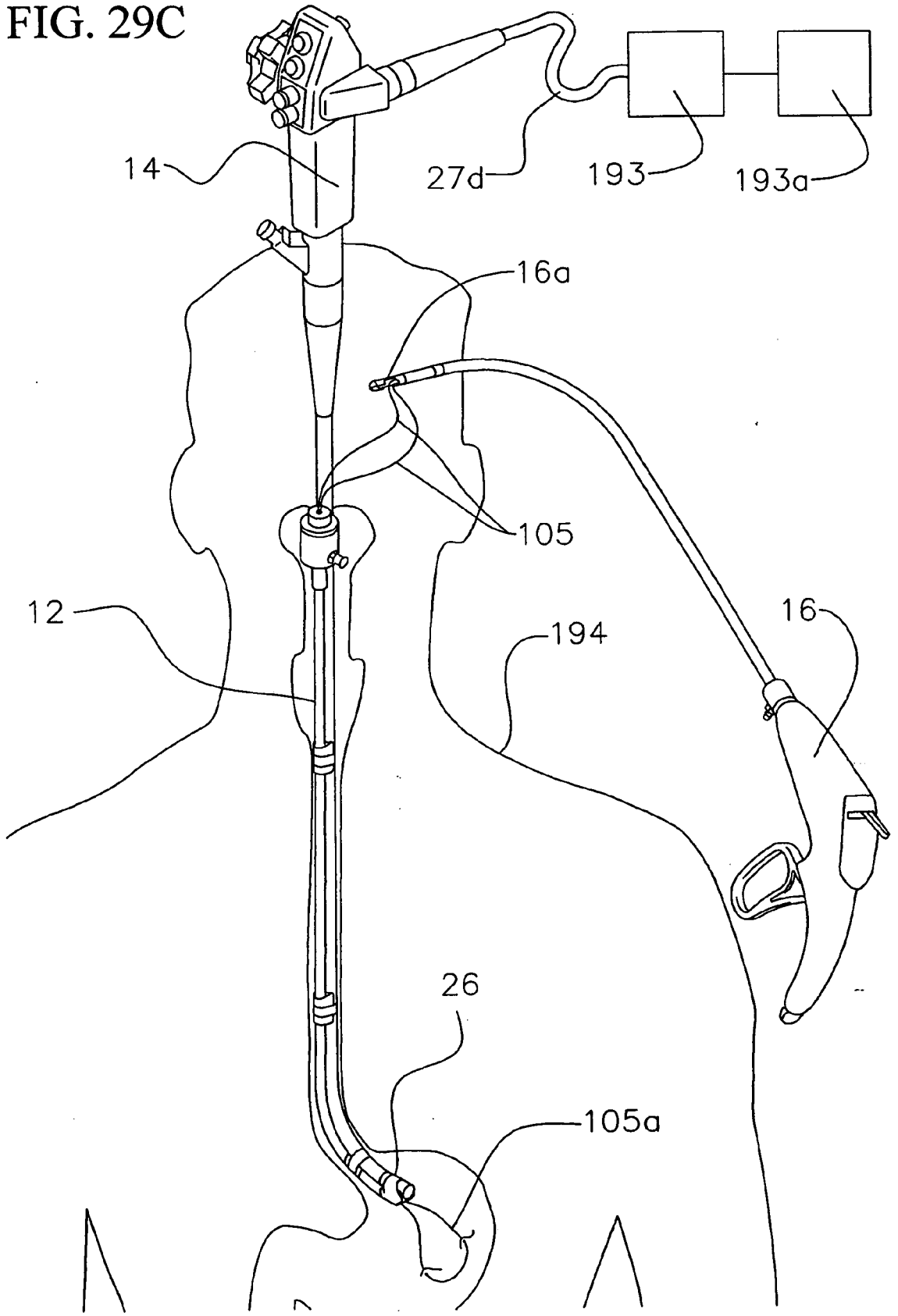

FIG. 29D

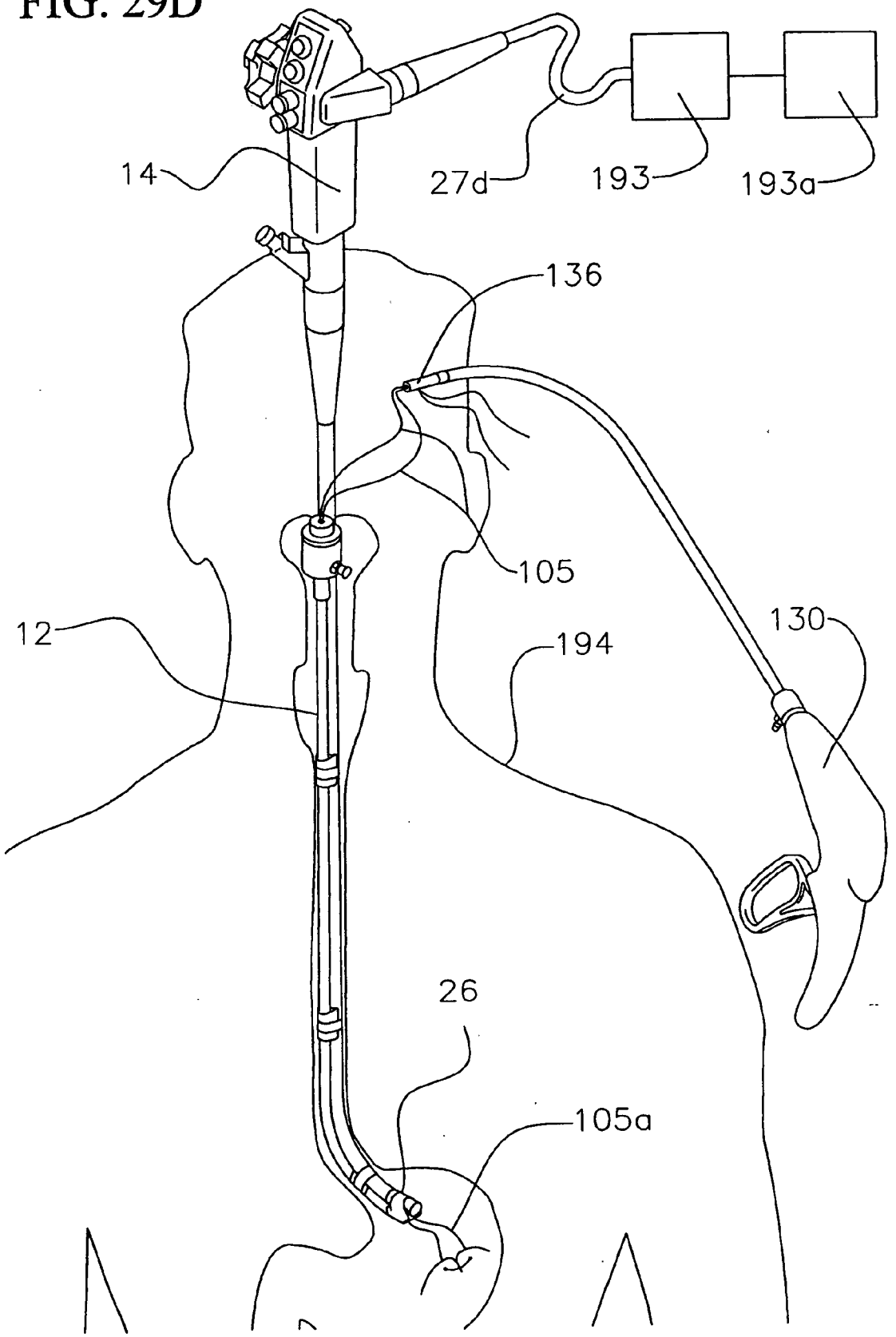

FIG. 29E

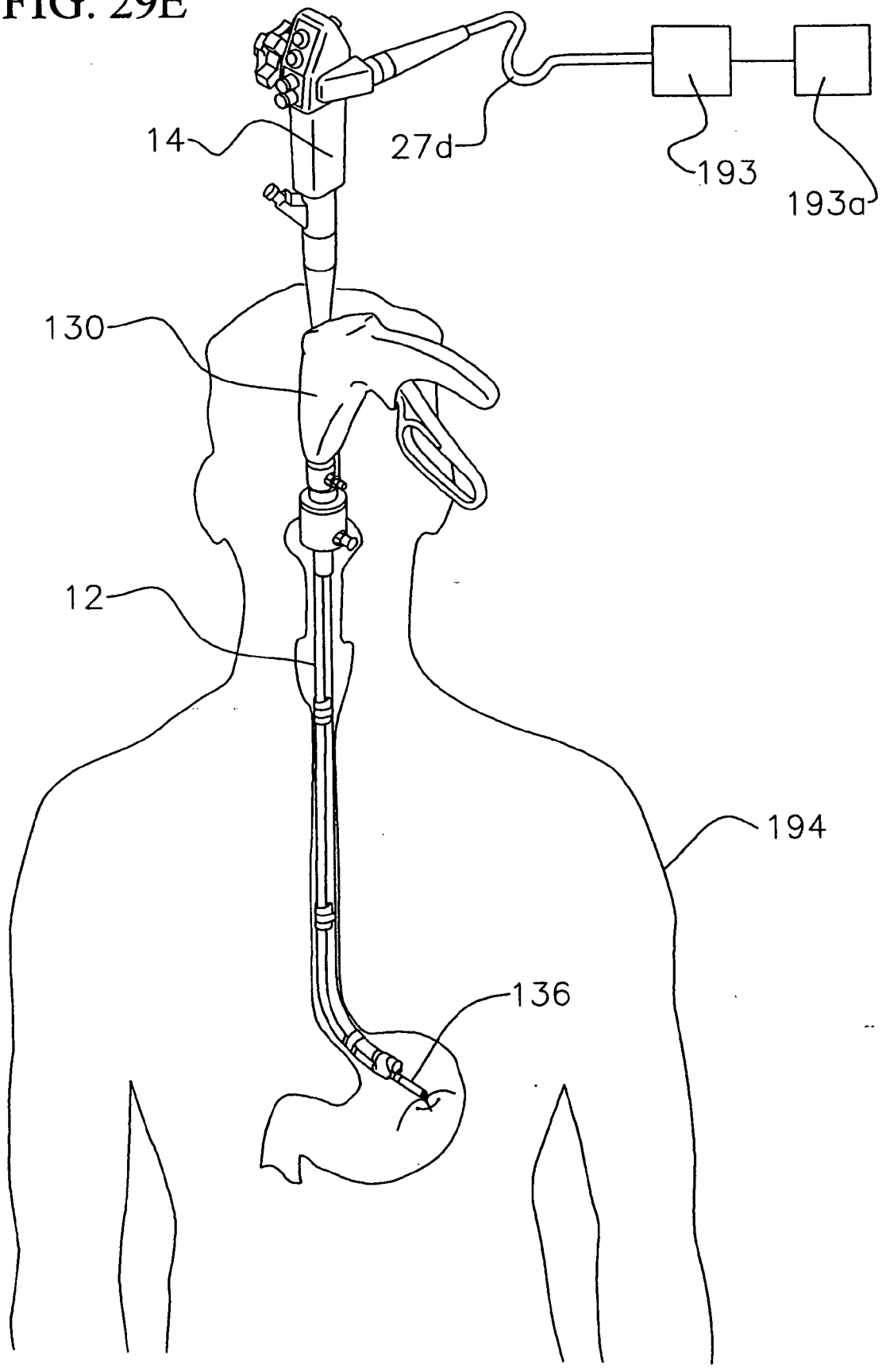

FIG. 29F

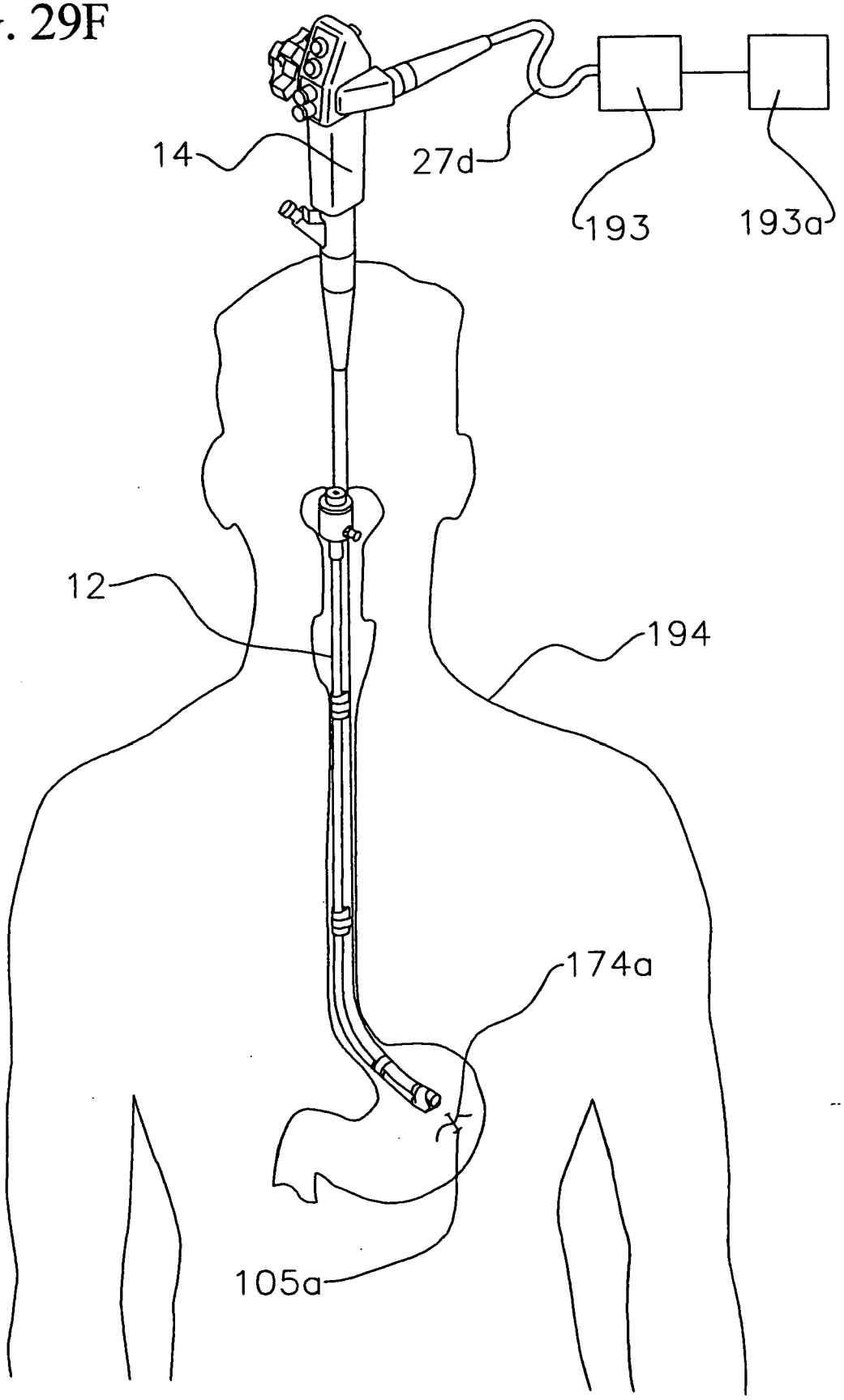

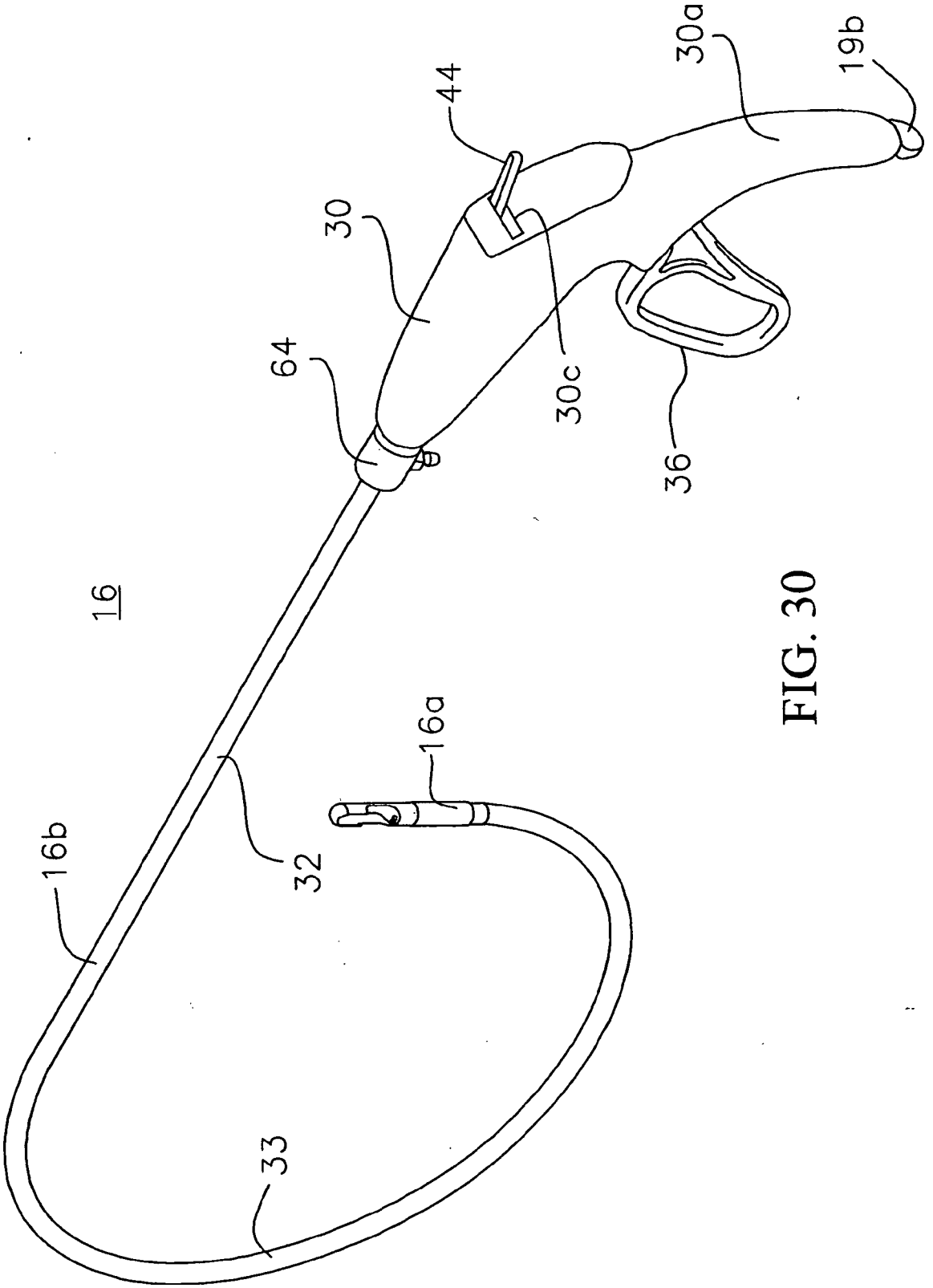

FIG. 30

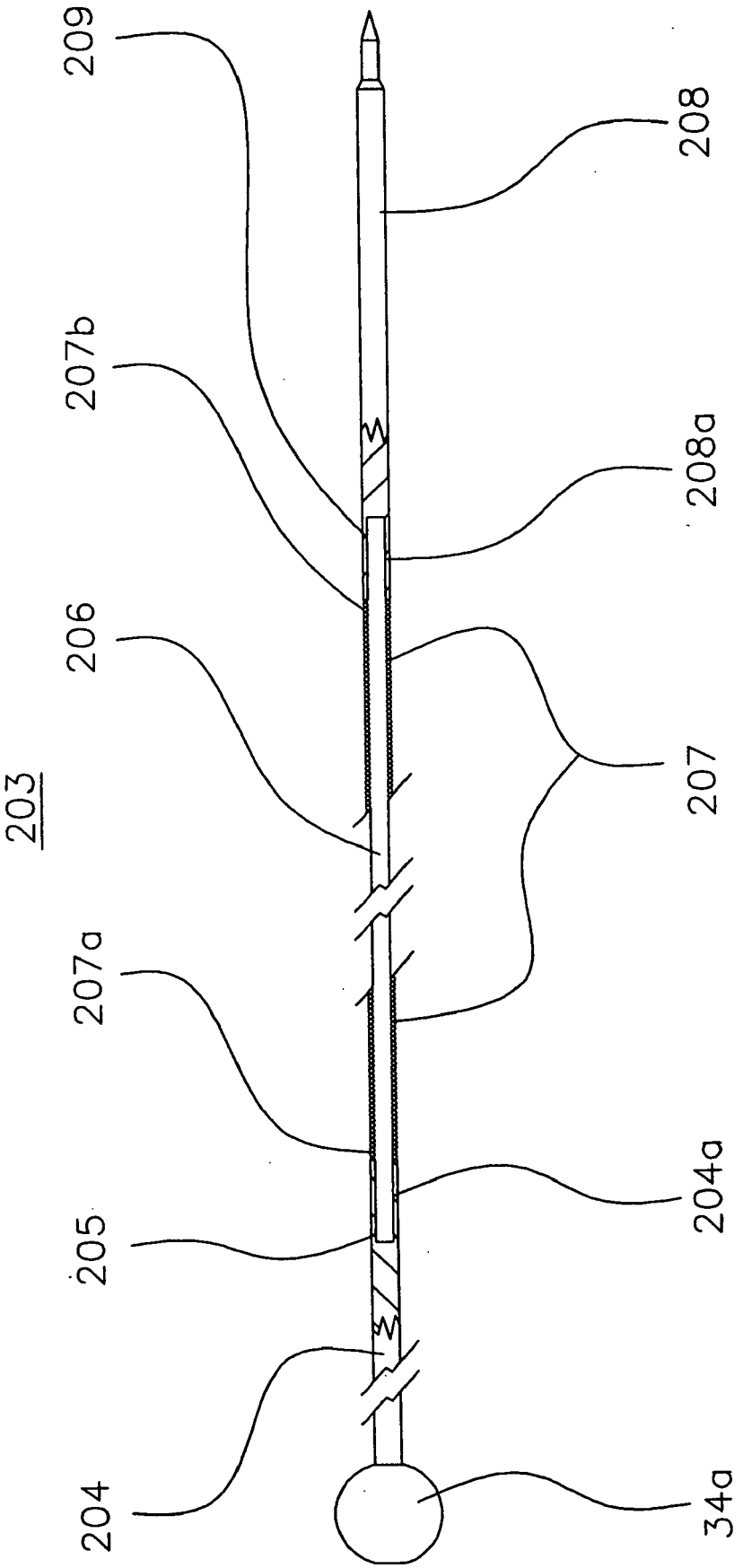

FIG. 31

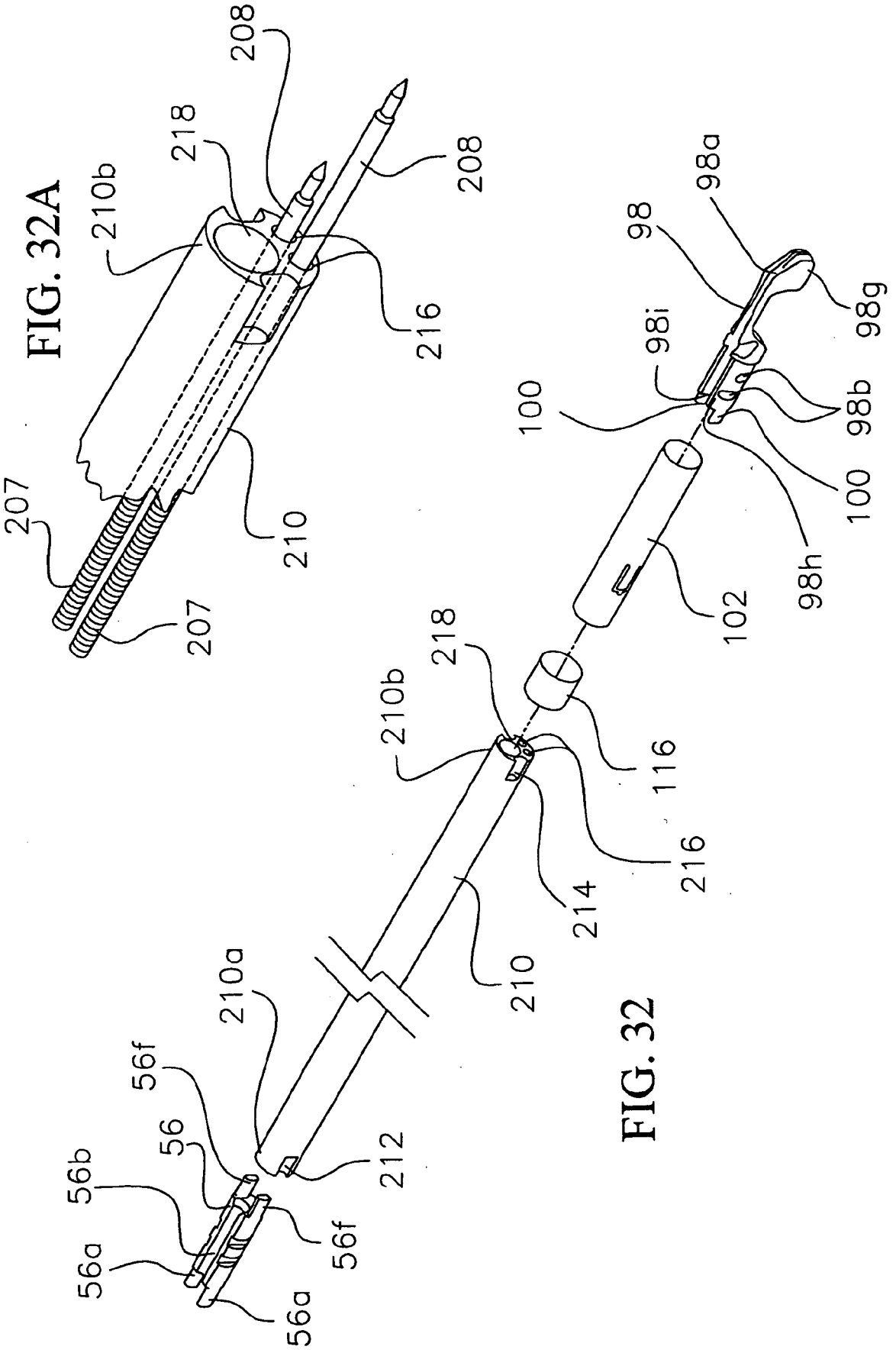

FIG. 32A

FIG. 32

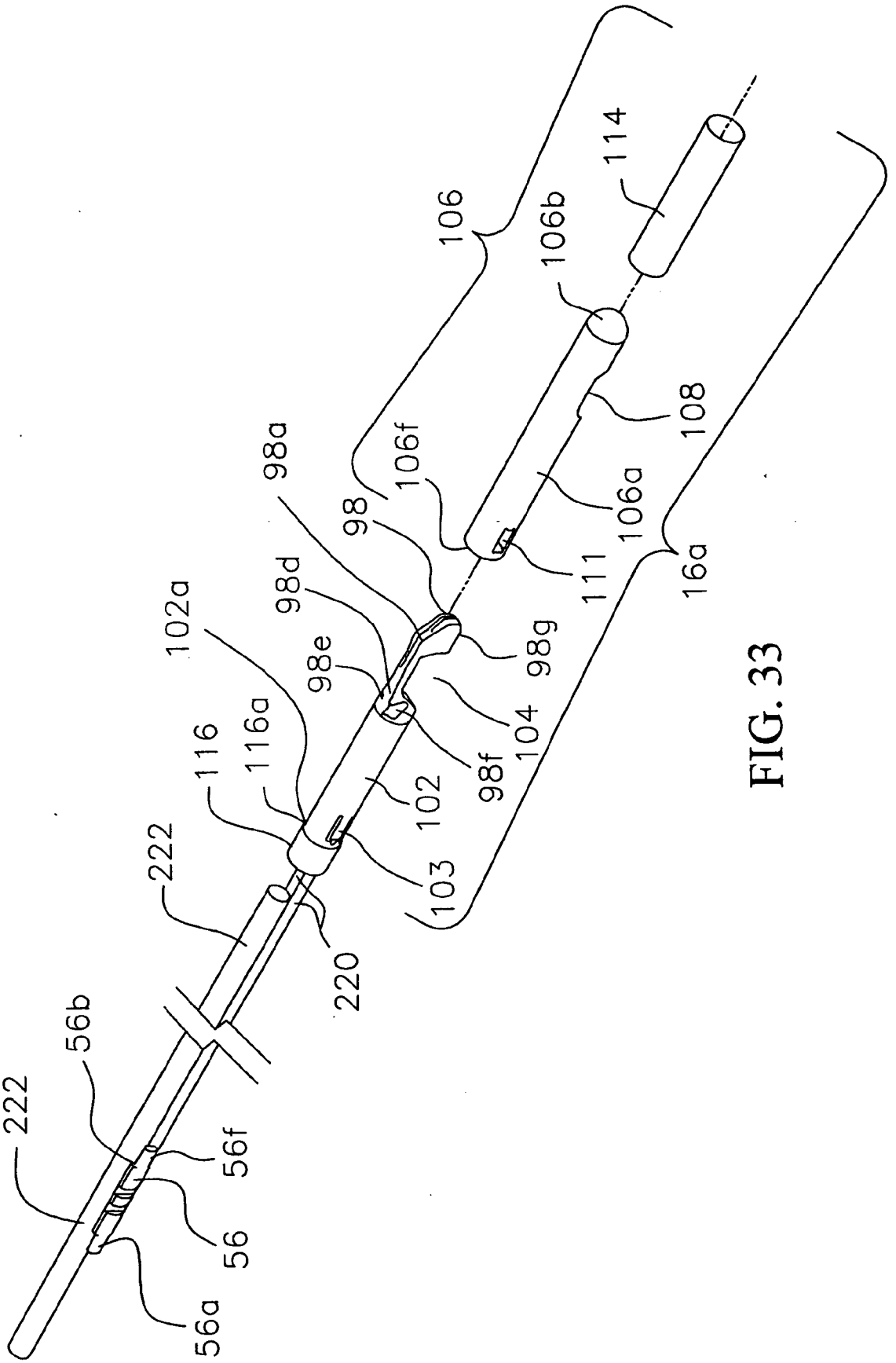
106
106b
114
108
106f
106a
111
16a
98a
98
98d
98e
98g
98f
104
102a
116
116a
102
103
222
220
56b
222
56f
56
56a

FIG. 33

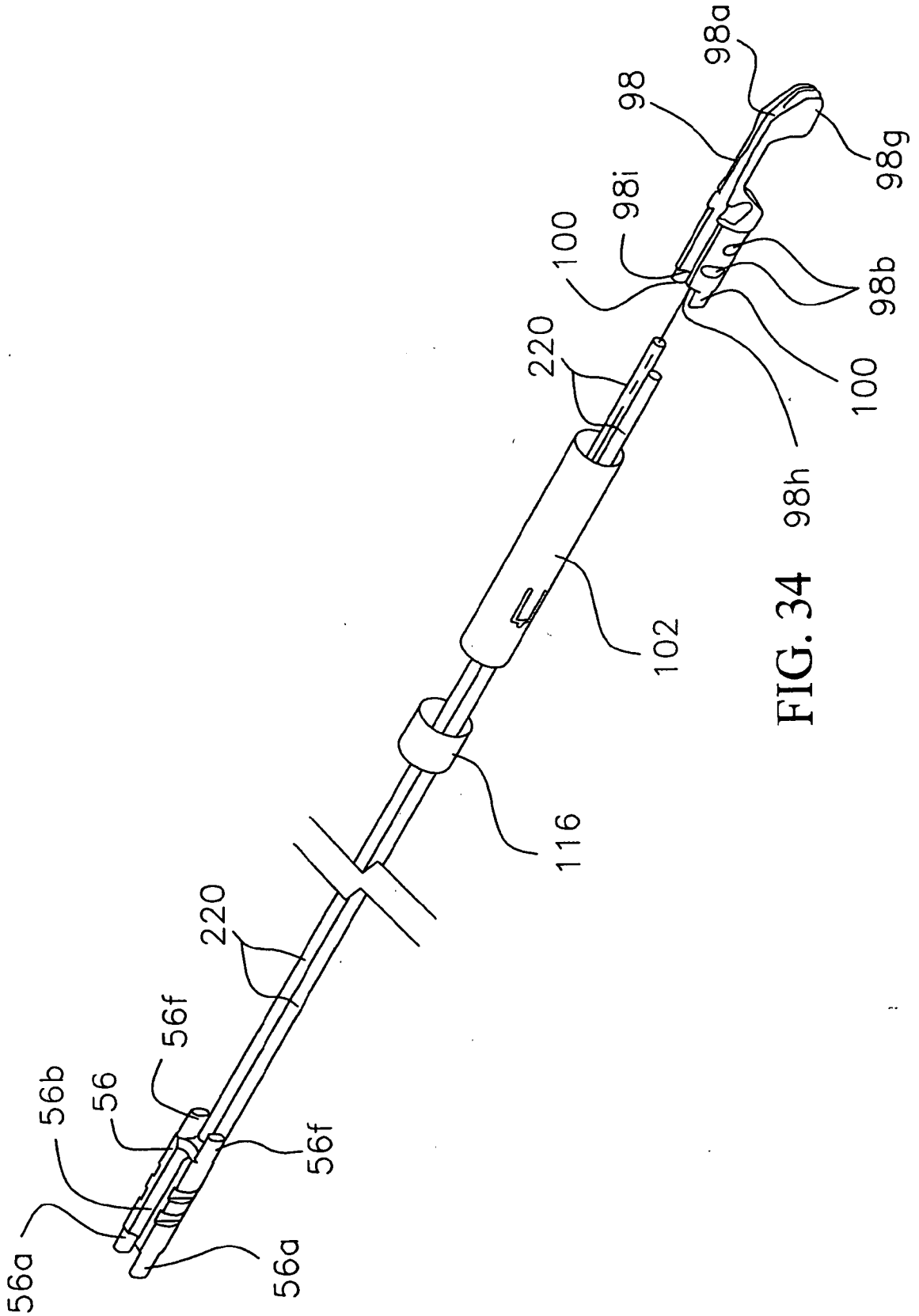
98a
98
98g
98i
100
98b
220
100
98h
102
116
220
56f
56b
56
56f
56a
56a

FIG. 34

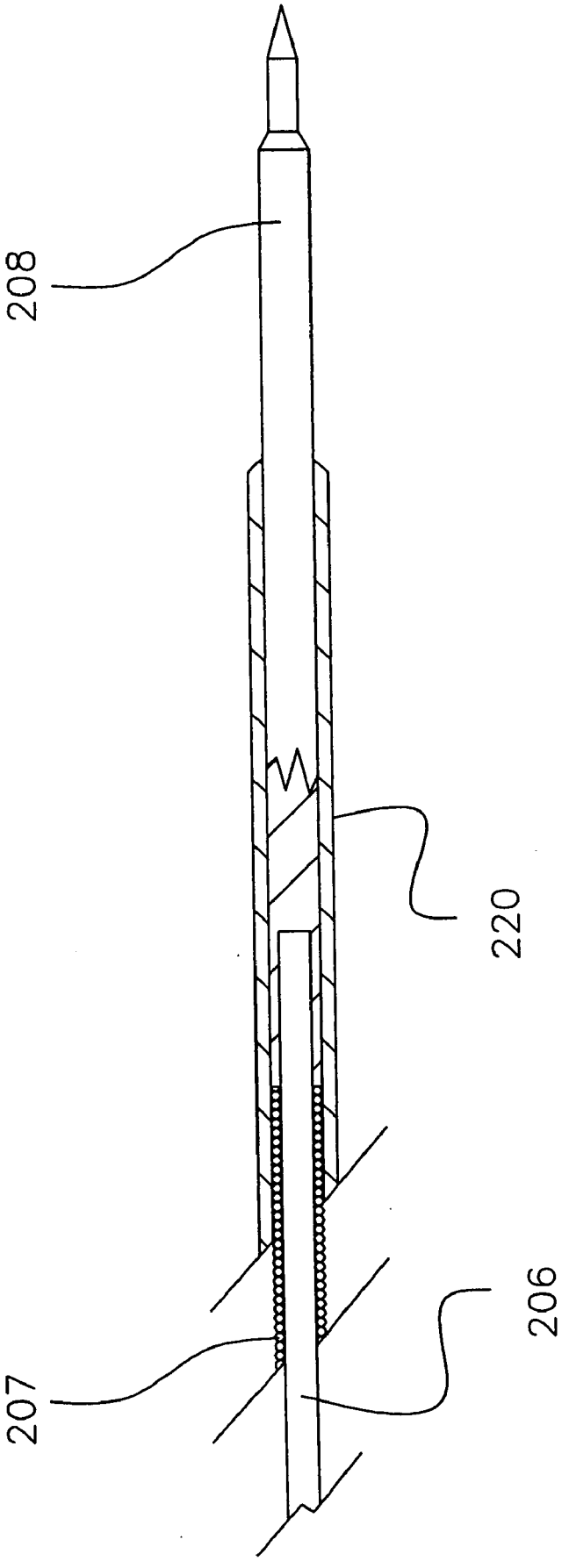

FIG. 35

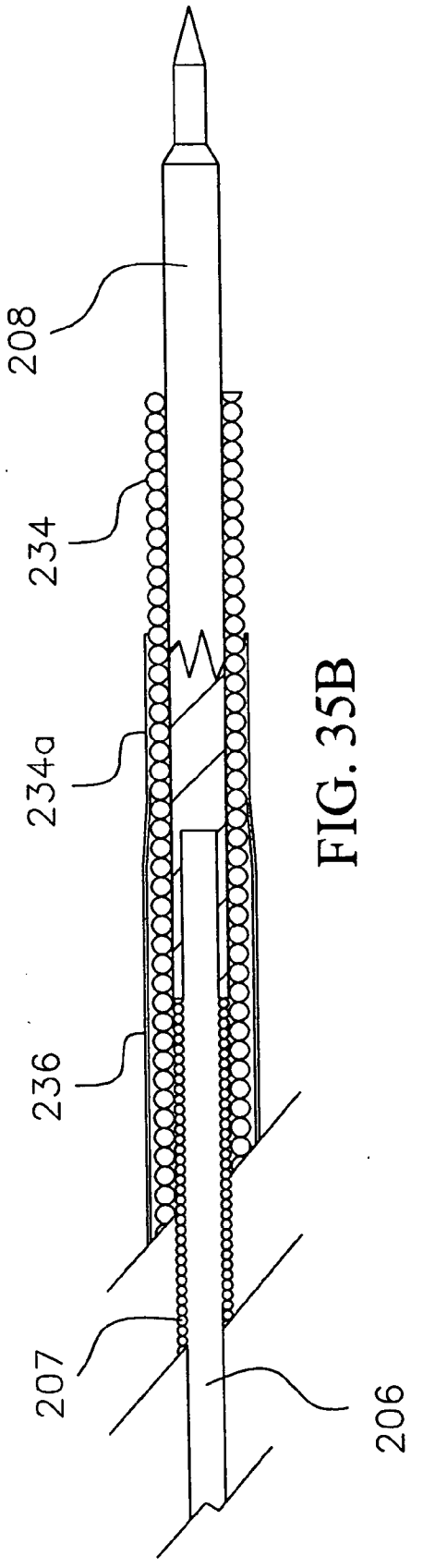

FIG. 35B

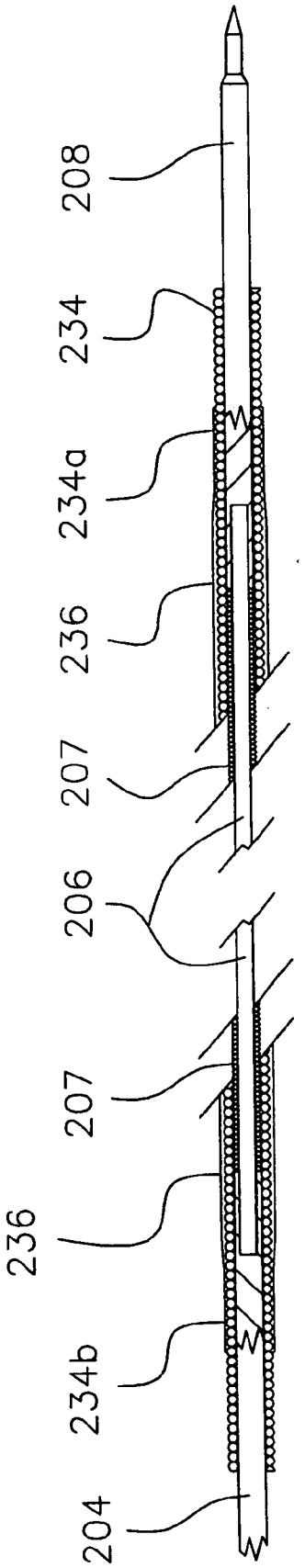

FIG. 35A

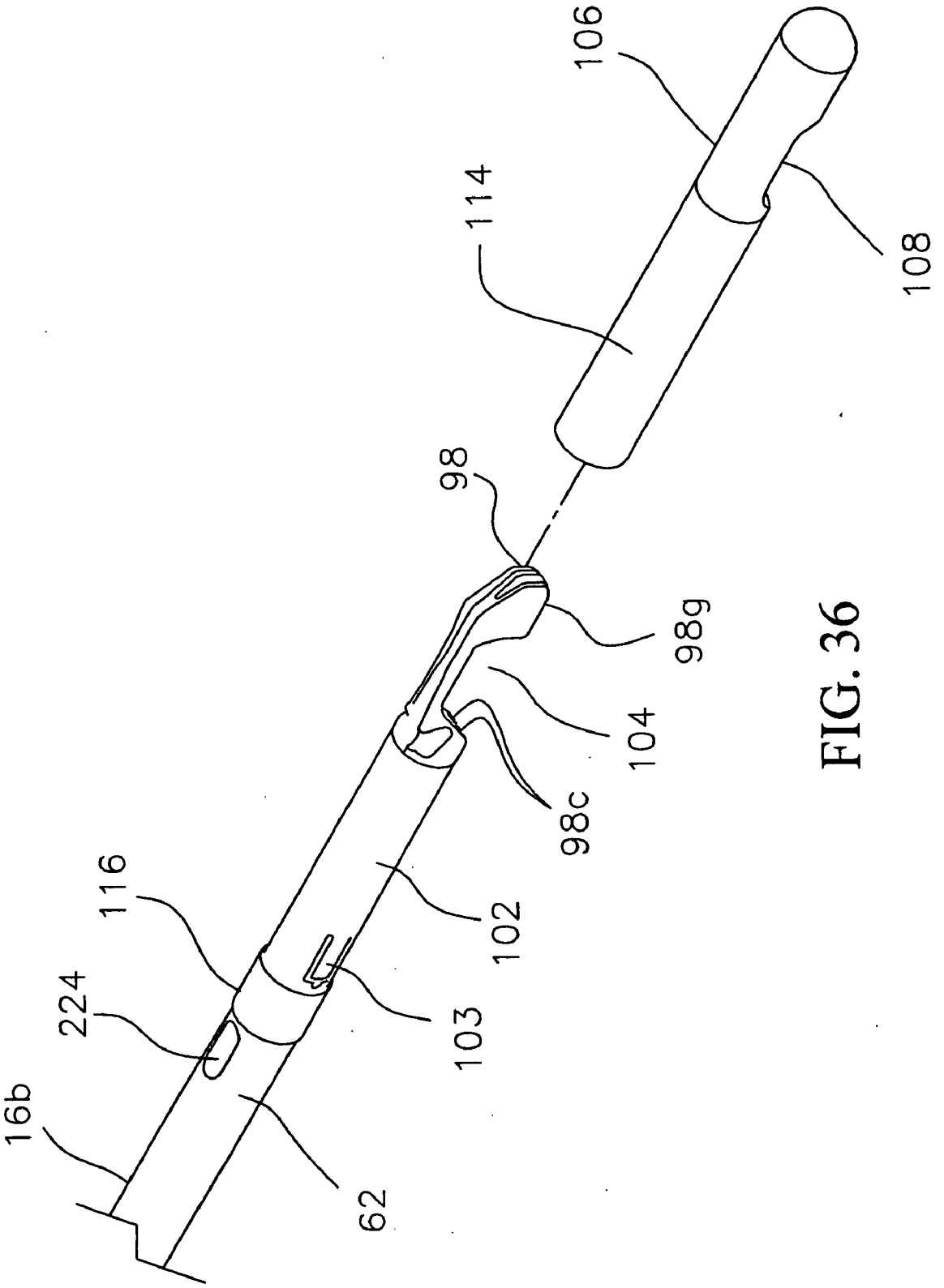

FIG. 36

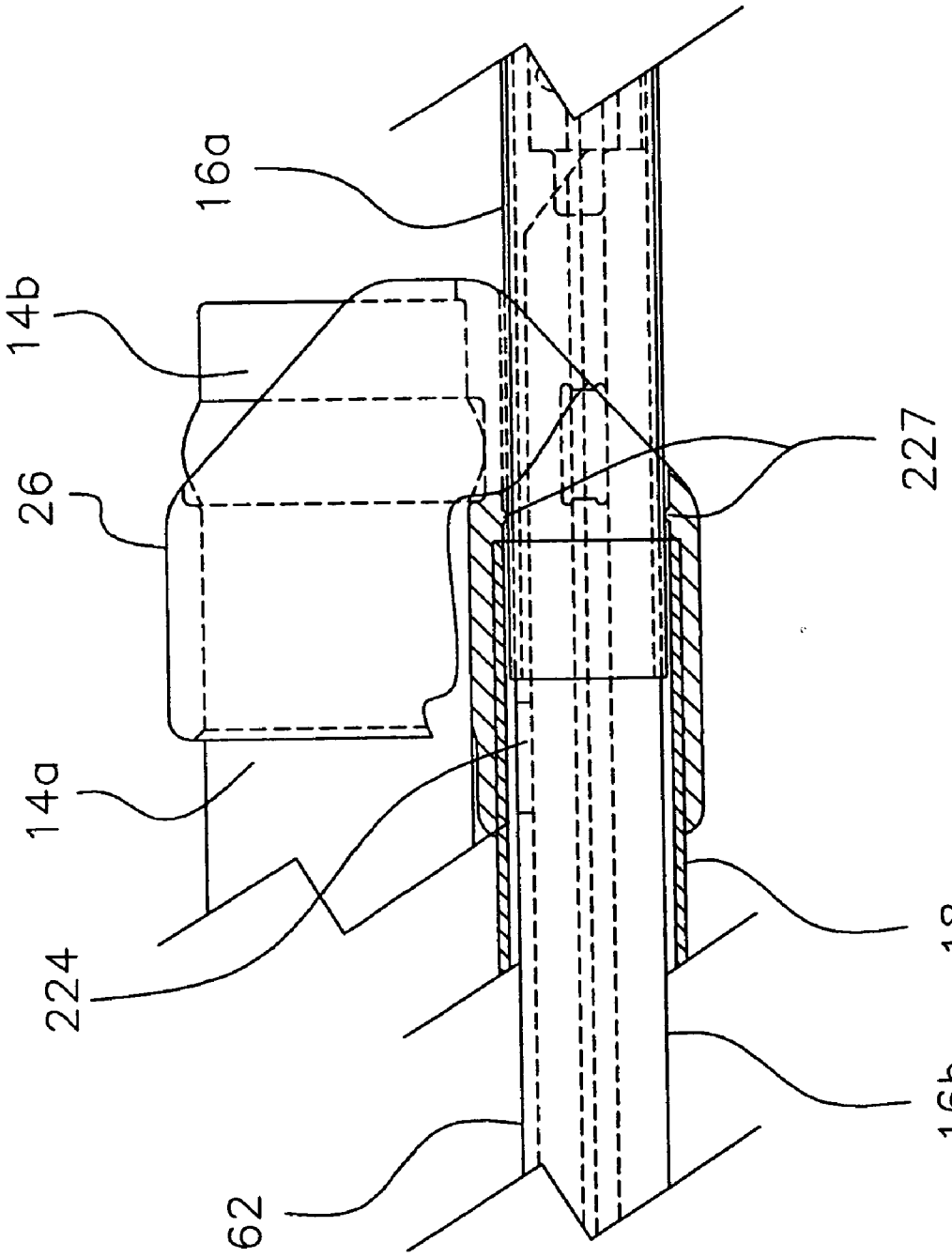

FIG. 36A

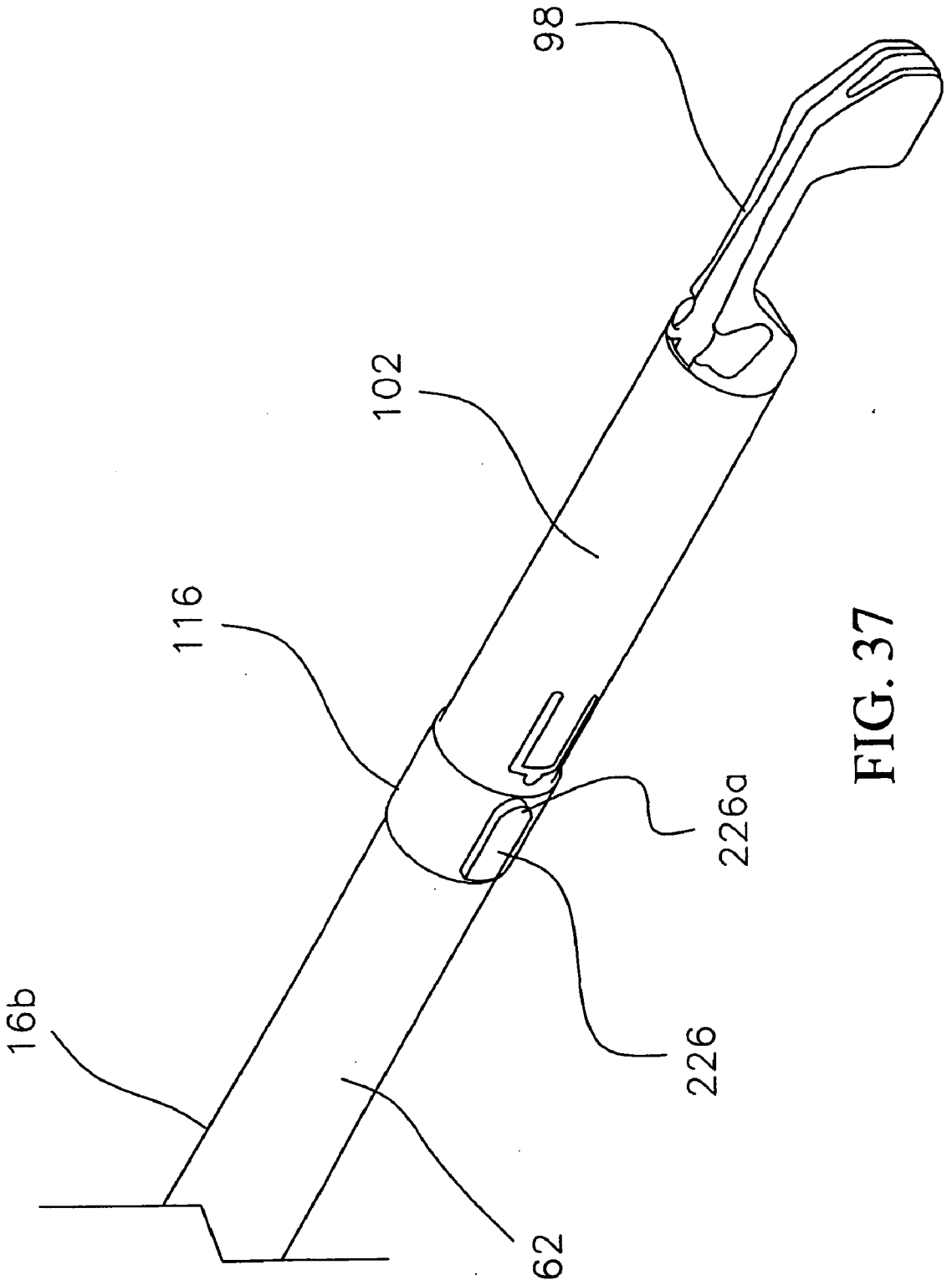

FIG. 37

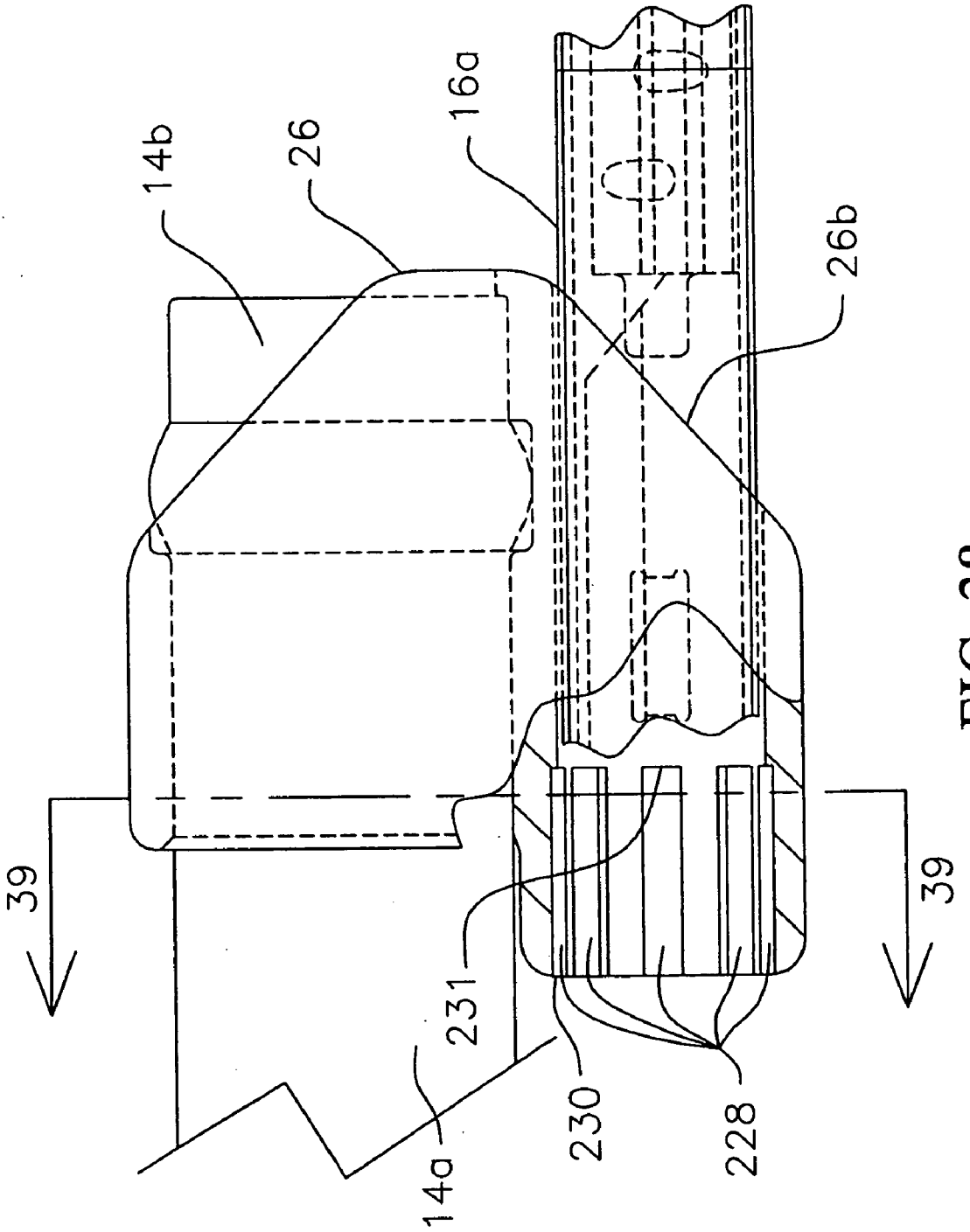

FIG. 38

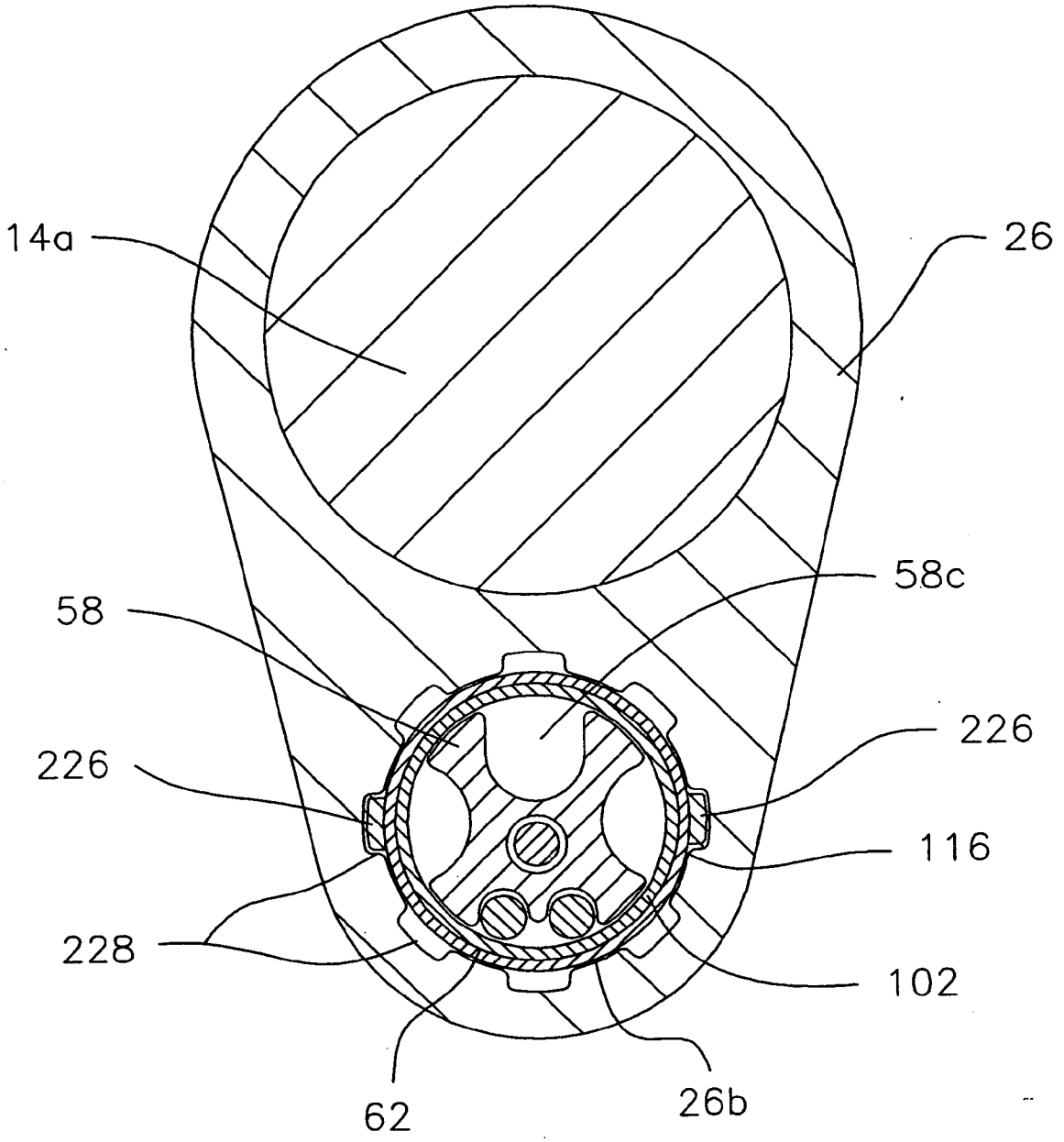

FIG. 39

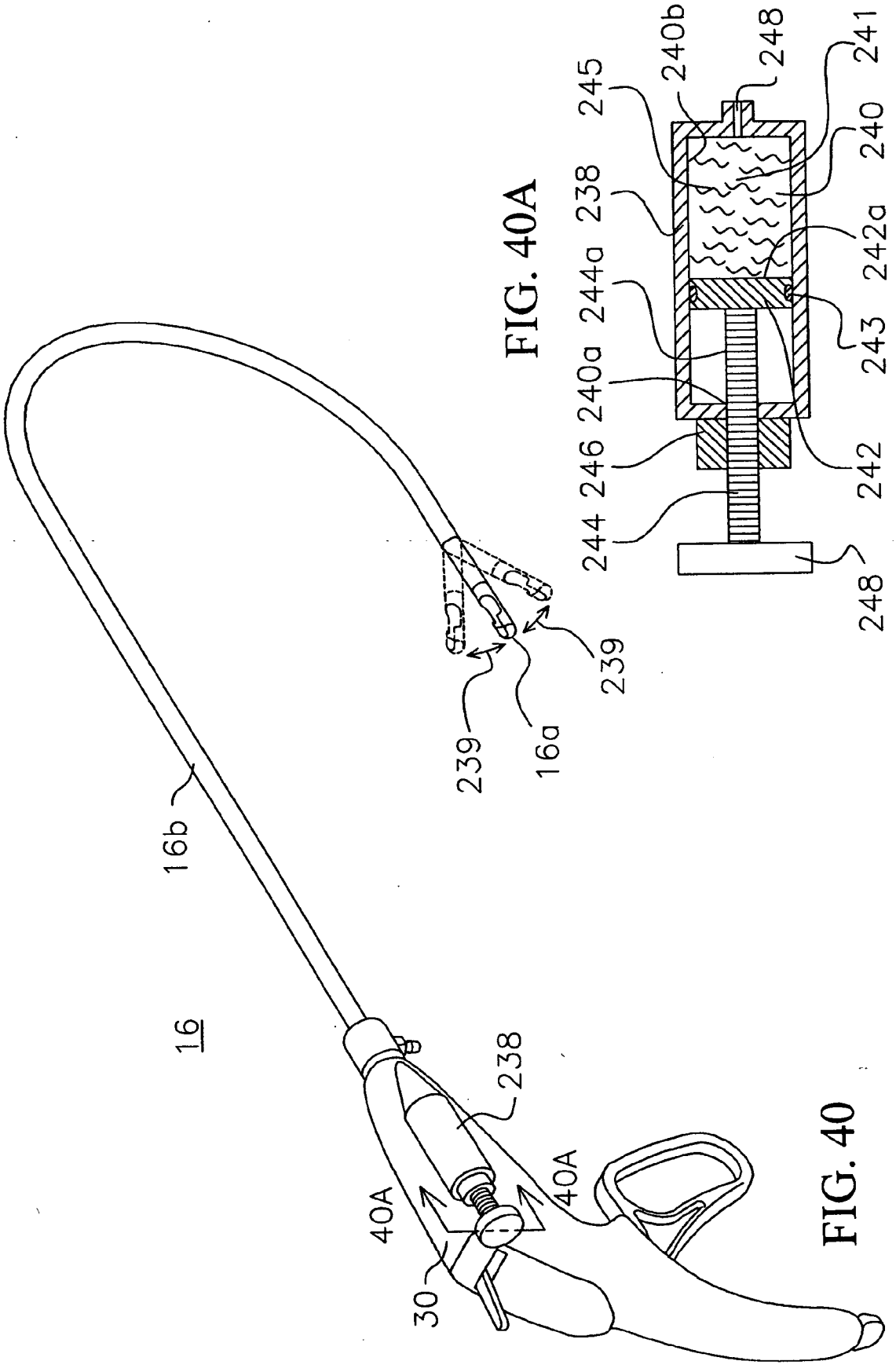

FIG. 40A

FIG. 40

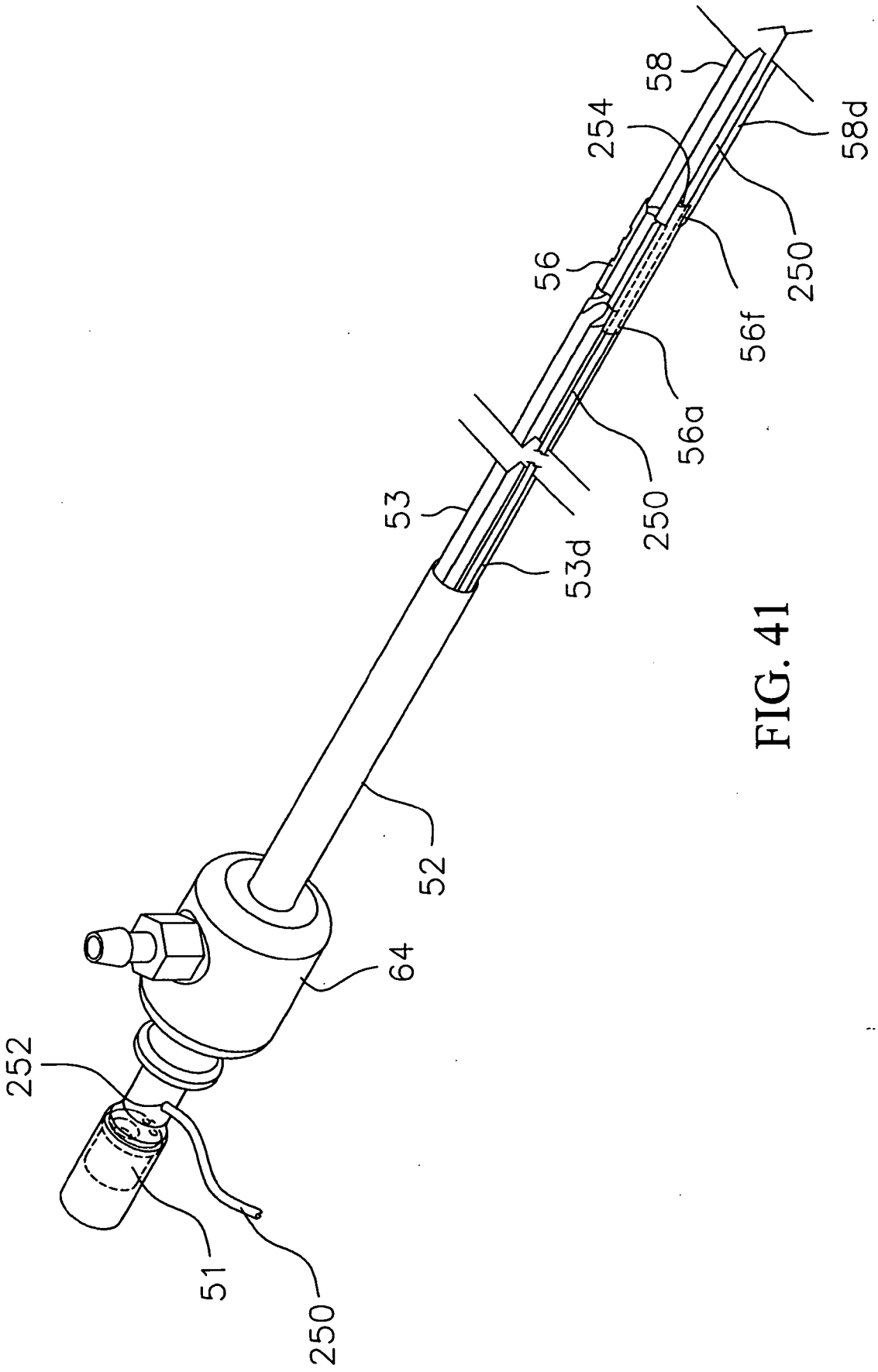

FIG. 41

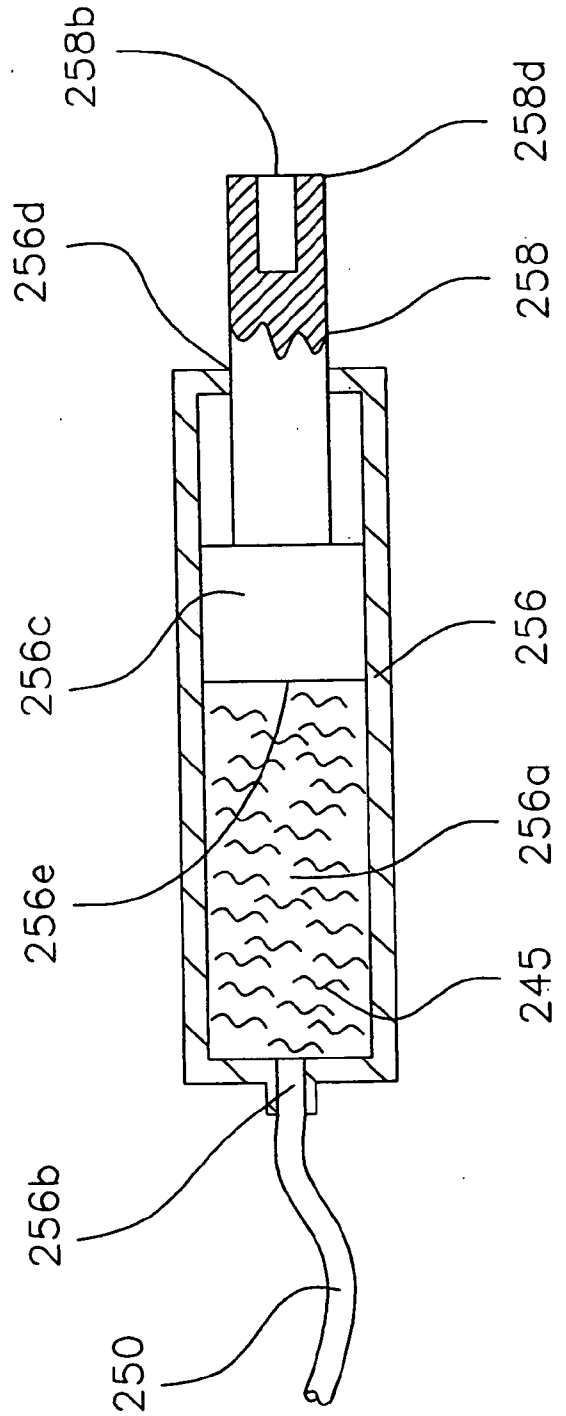

FIG. 42A

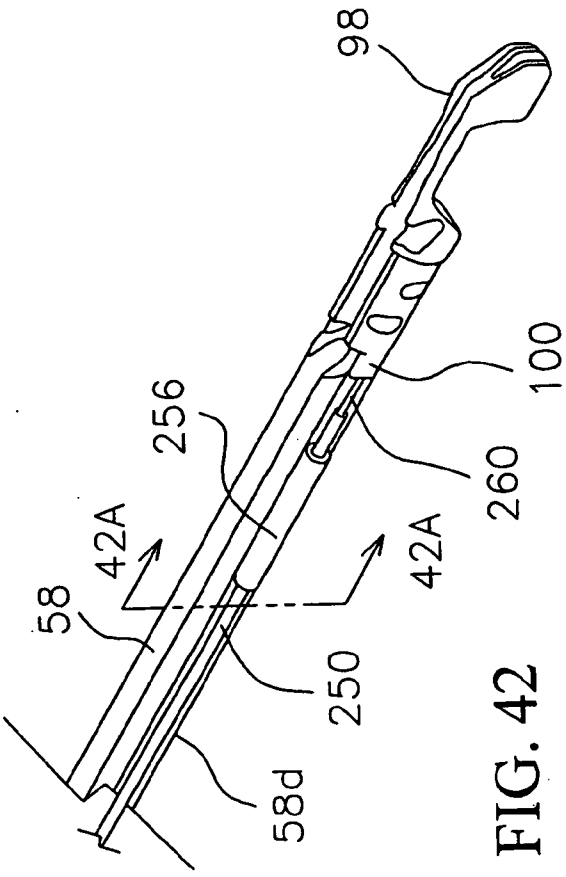

FIG. 42

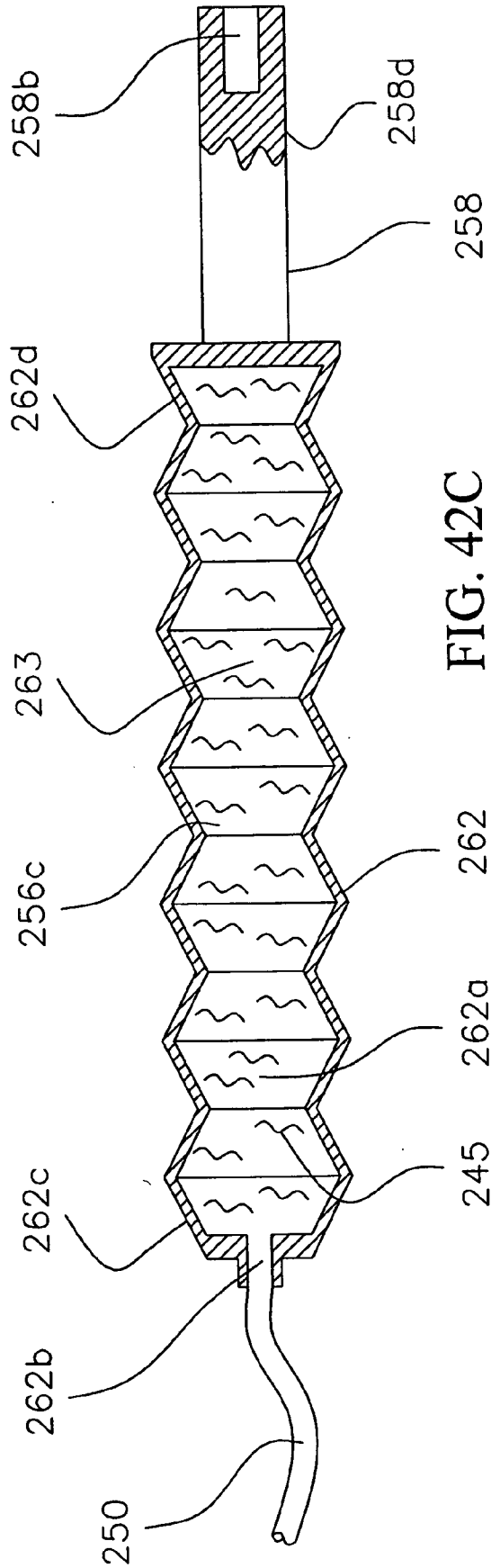

FIG. 42C

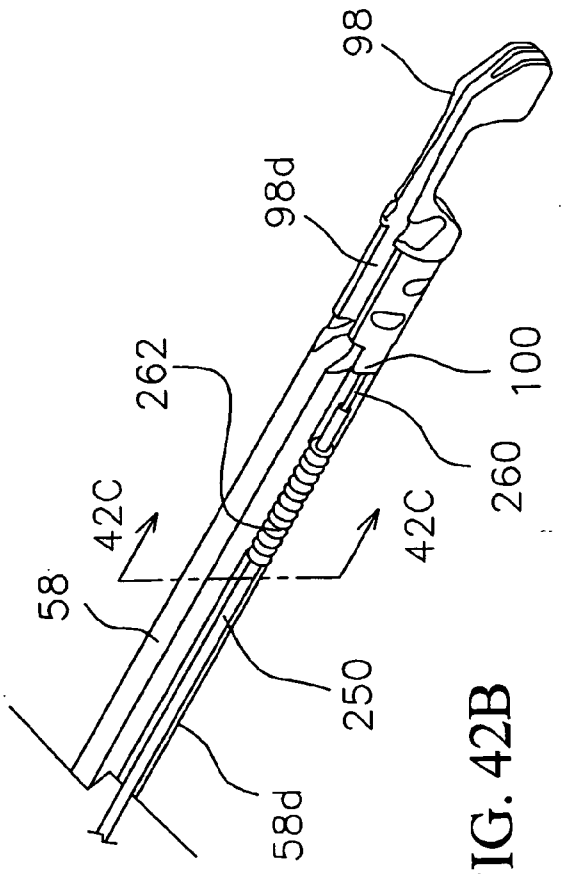

FIG. 42B

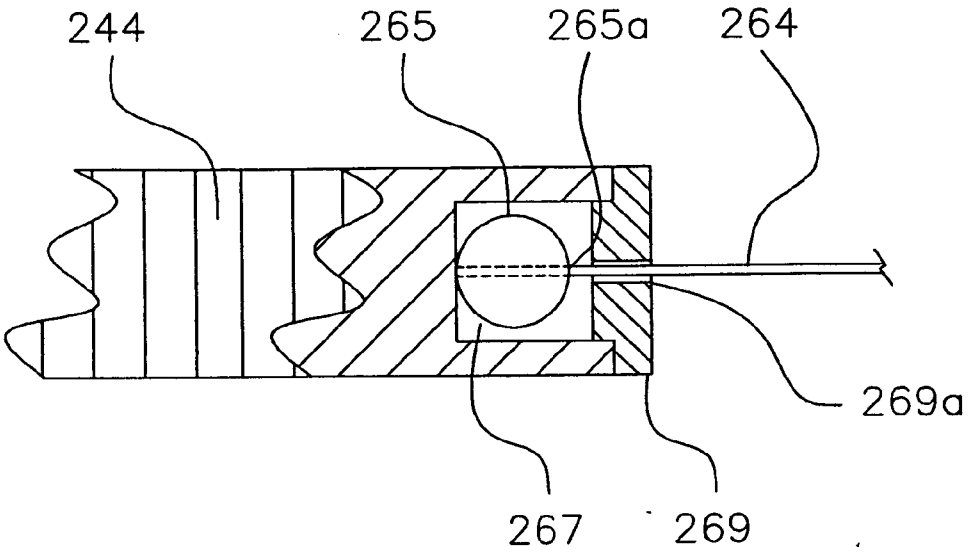

FIG. 43A

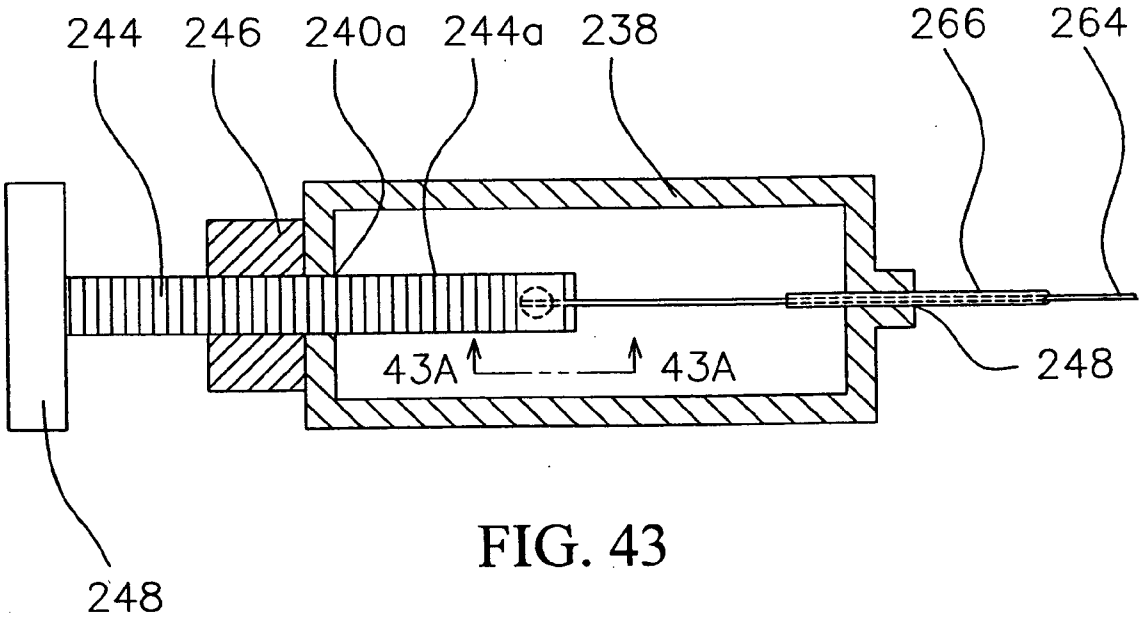

FIG. 43

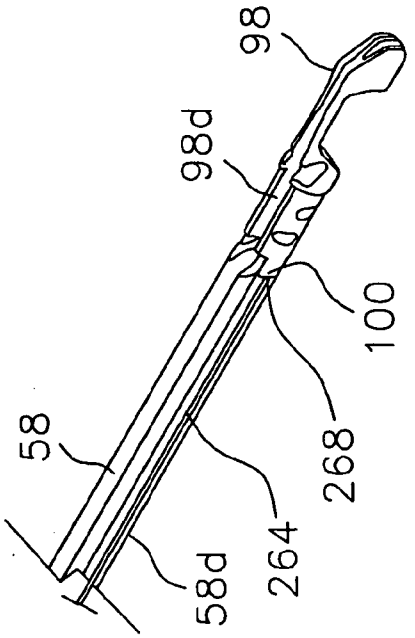

FIG. 44A

FIG. 44

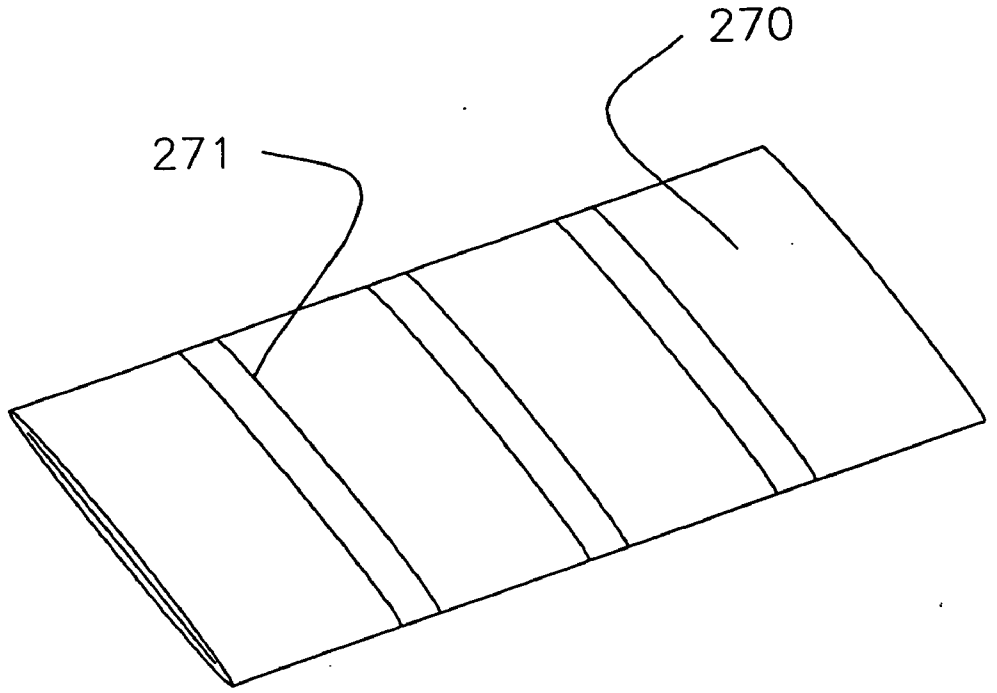

FIG. 45A

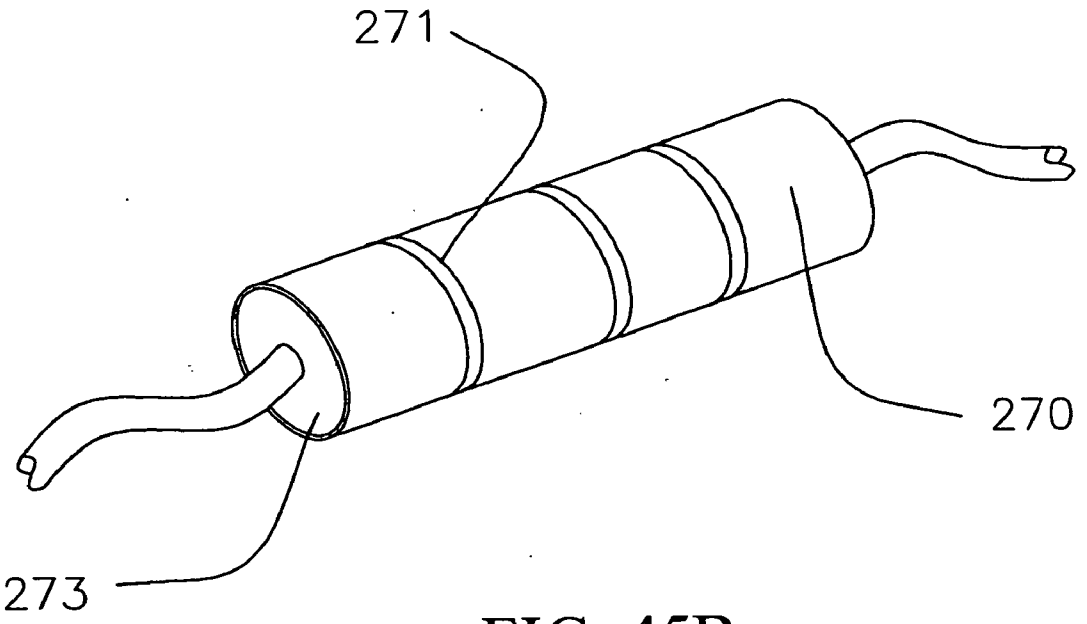

FIG. 45B

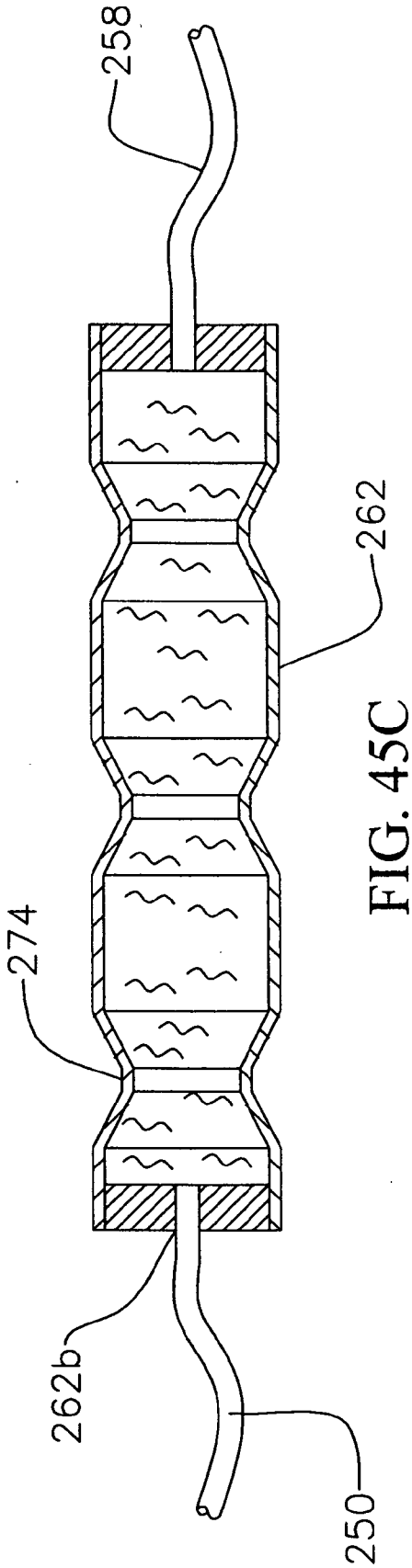

FIG. 45C

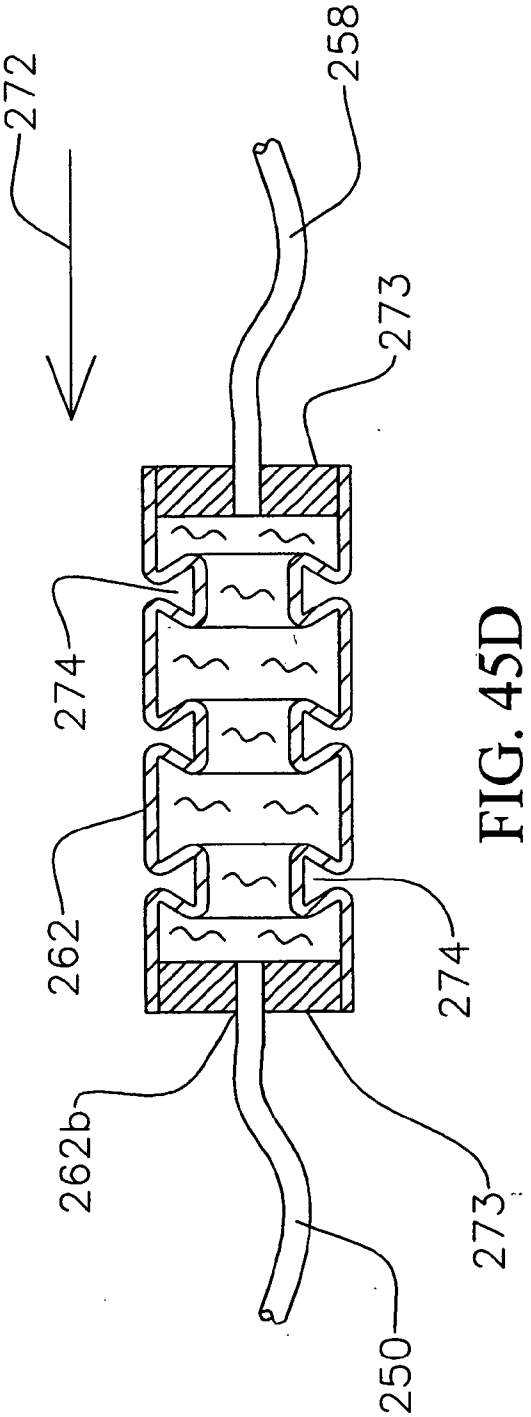

FIG. 45D

SYSTEM FOR ENDOSCOPIC SUTURING

FIELD OF THE INVENTION

[0001] The present invention relates to a system (and method) for endoscopic suturing, and in particular to a system for suturing through an accessory tube coupled to a flexible endoscope, which may be placed in the stomach through mouth and the esophagus of a patient utilizing a tissue suturing instrument and a suture securing instrument. The invention is suitable, for example, for applying at least one suture in the soft tissue lining of the stomach for different procedures such as gastroplasty, fundoplication, anterior gastropexy, or other procedures requiring suturing in the stomach, without the need for laparotomy or laparoscopy.

BACKGROUND OF THE INVENTION

[0002] Application of sutures in the gastrointestinal tract is required for several different types of medical procedures, for example, transoral endoscopic valvuloplasty for gastroesophageal reflux disease, gastroplasty, fundoplication, anterior gastropexy, suturing esophageal perforations, or closure of esophageal side of tracheo-esophageal fistula. Traditionally, these procedures were performed by physicians, such as gastroenterologist or surgeons, either by laparoscopy or open surgical techniques. Such procedures are invasive, as laparoscopy requires small access incision(s) made in the body of the patient through which a laparoscope and other surgical enabling tools are provided, while open surgical techniques are traditionally invasive and can have complications and long patient recovery periods.

[0003] The solution to these problems is to perform these medical procedures through the gastroesophageal tract via the mouth or other naturally occurring orifices. Already available flexible endoscopes, commonly called gastroscopes, can be provided through the gastroesophageal tract and enable illumination and visualization of tissue along the gastroesophageal tract on a video display for diagnostic purposes. Although gastroscopes often have a working channel to a port at the distal end of the gastroscope through which a biopsy tool may be provided to obtain tissue samples, they are not currently designed or typically large enough to be capable of applying sutures in tissue.

[0004] U.S. Pat. No. 5,792,153 describes a sewing device coupled to the distal end of an endoscope, which enables suturing in the gastroesophageal tract of a patient. The sewing device has a single hollow needle mounted in the biopsy channel of the endoscope, and a wire extending through the needle to a T-shaped tag having one end of a suture thread which extends outside of the patient. To apply a suture, suction is applied to a U-shaped opening of the sewing device via another channel of the endoscope to suck a layer (or fold) of tissue into the U-shaped opening, the needle in the biopsy channel is then pushed through the tissue, and then the wire is pushed and rotated to position the tag in a chamber along one side of the U-shaped opening. This rotates the tag into a position which captures the tag and the suture end in this chamber, and the needle and wire are retracted to the other side of the U-shaped opening. The endoscope and its coupled sewing device are removed from the patient, leaving a loop of suture through the tissue which must then be secured and closed. The patent also provides another sewing device at the end of an endoscope which enables multiple stitches in tissue with the same needle and suture thread. The sewing device of U.S. Pat. No. 5,792,153 to apply a single stitch is manufactured by Laboratories BARD S.A. of Voisinsle Bretonneux, France, and described in Kadirkamanathan et al., Gastrointestinal Endoscopy, August 1996, Vol. 44, No. 2, pp. 144-162.

[0005] Once the suture thread is placed through the tissue with the sewing device of U.S. Pat. No. 5,792,153, the suture thread must be secured and then cut close to the tissue. One device also manufactured by Laboratories BARD S.A., and described in U.S. Pat. No. 5,755,730, provides for securing and cutting suture using an endoscope. The device passes through the biopsy channel of the endoscope is order to push a knot made by a physician or surgeon, which ties the ends of a loop of suture thread together, down to the tissue, and then a cutting member cut the ends of the suture. Since the sewing device of U.S. Pat. No. 5,792,153 does not allow normal use of its biopsy channel of the endoscope upon which the sewing device is mounted, a second endoscope must be used to secure and cut the suture through its biopsy channel using the device described in U.S. Pat. No. 5,755,730. This results in multiple passes of endoscopes back and forth through the gastroesophageal tract, especially if single sutures are each applied and secured at multiple locations in tissue. To reduce possible damage to the esophageal tract and to facilitate multiple instrument insertions, an overtube is first placed in the esophageal tract and each endoscope is inserted and removed through the overtube. However, the overtube may be uncomfortable to patients, and can cause complications, such as mucosal tears in the esophagus. Accordingly, it would be desirable to provide a system for suturing which does not require different endoscopes for suture placement and suture securing, and moreover can apply and secure multiple single sutures in tissue with the single insertion of a flexible endoscope, i.e., gastroscope without requiring an overtube.

[0006] Other sewing devices or machines mounted on the end of an endoscope are described in U.S. Pat. Nos. 5,037,021 and 4,841,888. These sewing devices similarly utilize two channels of the endoscope, one to suction tissue into a slot of the device and the other to advance and retract a wire coupled to needle through the tissue. The needle has a suture loop at its tip such that when the needle is advanced through the slot it extends into a chamber where a hook or U-shaped member pivots to retain the suture loop when the needle retracts. A wire is coupled to the hook and extends through the same channel where suction is provided, such that movement of this wire pivot the hook to capture the suture thread. Removal of the sewing device then leaves a loop of suture through the tissue.

[0007] A further sewing device is described in U.S. Pat. No. 5,080,663 and also utilizes an operating device having tubes in a tubular sheath, such as endoscopic means, to provide suction to a slot in the device to capture a double fold of tissue and two wires extending through such tubes. One wire advances and retracts a needle having a tag with suture at its tip through tissue and the other wire controls capture of a tag at the other side of the opening. The patent provides for applying a sensor or transmitter in the body of a patient, such as the stomach. This sewing device is also described in Swaine et al., An endoscopically deliverable tissue-transfixing device for securing biosensors in the gas-

trointestinal tract, Gastrointestinal Endoscopy, November/December 1994, Vol. 40, No. 6, pp. 730-737.

[0008] Like the sewing devices of U.S. Pat. No. 5,792,153, those described in U.S. Pat. Nos. 5,037,021 4,841,888, and 5,080,663 have the same drawbacks as these devices are also mounted on an endoscope. Moreover, mounting on an endoscope limits the use of the endoscope for full visualization of tissue, as the sewing device partially obstructs the viewing area at the distal end of the endoscope. Further the use of the biopsy or working channel of an endoscope for needle placement does not allow use of the channel for other purposes, such as obtaining a biopsy. Accordingly, it would further be desirable to provide for suturing with a flexible endoscope which allows for more complete traditional use of the endoscope.

SUMMARY OF THE INVENTION

[0009] Accordingly, it is the principal object of the present invention to provide an improved system for endoscopic suturing that overcomes the drawbacks of the prior art.

[0010] It is another object of the present invention to provide an improved system for endoscopic suturing which allows single insertion of an endoscope and accessory tube assembly in the gastrointestinal tract of a patient through which multiple instruments for suturing and securing sutures can be used without removal of the endoscope between suturing and suture securing operations.

[0011] It is a further object of the present invention to provide an improved system for endoscopic suturing which provides a channel to sew through independent of an endoscope.

[0012] Yet a further object of the present invention is to provide an improved system for endoscopic suturing in which a suturing instrument separate from an endoscope can utilize suction to capture tissue to be sutured.

[0013] A still further object of the present invention is to provide an improved system for remote suturing in which can readily adapted to different types of flexible endoscopes to provide an external accessory tube through which medical or surgical instruments can pass.

[0014] A still further object of the present invention is to provide an improved system for endoscopic suturing which utilizes one or more instruments which each have a sufficient flexible shaft to pass through an external flexible accessory tube attached to a flexible endoscope.

[0015] A further object of the present invention is to provide an improved system for endoscopic suturing using instruments having shafts with enhanced flexibility.

[0016] And a still further object of the present invention is to provide an improved system for endoscopic suturing using flexible instruments with mechanical or hydraulic steerability.

[0017] Yet a further object of the present invention is to provide an improved system for endoscopic suturing in which remote viewing with an endoscope of suture and suture securing operations is provided in the stomach without hindering endoscope functionality.

[0018] Briefly described, a preferred embodiment of this system embodying the invention includes an endoscope, such as a gastroscope, having a distal end locatable in the body of a patient, such as in the gastrointestinal or gastroesophageal tract, and a flexible shaft extending to the distal end, a flexible accessory tube coupled to the endoscope to be movable relative to the endoscope's shaft, and an attachment tip coupled to the shaft of the endoscope having an opening through which one end of the accessory tube is received. The accessory tube is coupled to the shaft of the endoscope with multiple tube guides enabling the accessory tube to slide through the tube guides in response to bending of the endoscope's shaft. The accessory tube has a cannula through which an instrument may pass in the accessory tube. The system includes a tissue suturing instrument having a partially flexible shaft locatable through the accessory tube, and a tissue engaging end coupled to the shaft which is viewable by the endoscope at its distal end when the instrument is fully inserted through the accessory tube. The tissue engaging end has a vacuum sleeve enabling suction to be selectably applied at the tissue engaging end to capture tissue in a gap of a sew tip through an opening in the vacuum sleeve. Suction is applied via a vacuum connection assembly to a channel which extends down the shaft to the sew tip. A valve is provided to close one end of the suture carrying channel to enable such suction at the sew tip. Two needles are provided which extends through the shaft of the suturing instrument. Each needle is separately actuated into the gap of the sew tip through suctioned tissue to capture a ferrule having one end of a loop of suture. The system further includes a suture securing instrument having a partially flexible shaft locatable through the accessory tube, and a distal end coupled to the shaft which is viewable by the endoscope at its distal end when the instrument is fully inserted through the accessory tube. After removal of the suturing instrument from the accessory tube, a loop of suture extends through the tissue through the accessory tube, the suture securing instrument receives the free ends of the loop of suture at its distal end through a sleeve member, and the suture securing instrument is then inserted through the accessory tube to the location of the suture in the tissue. The suture securing instrument crimps the sleeve member and cuts the free ends of the suture to retain the suture closed. The endoscope enable an operator, such as a surgeon, gastroenterologist, or other skilled physician, to view the engaging end of the suturing instrument for selecting placement of the suture through tissue, and of the distal end of the suture securing instrument to secure the suture closed.

[0019] The suturing instrument in the system may further include a mechanism for steering the tissue engaging end of the instrument independent of steerability of the flexible endoscope.

[0020] A method embodying the present invention is also provided having the steps of: locating an endoscope, such as a gastroscope, coupled to an accessory tube through the gastrointestinal or gastroesophageal tract of a patient; inserting a suturing instrument through the accessory tube to place two ends of a loop of suture through tissue of the gastrointestinal or gastroesophageal tract; removing the suturing instrument to leave a loop of suture in the tissue having two free ends extending from the accessory tube; inserting a suture securing instrument having a distal end with a sleeve member through which the free ends of the suture loop are drawn to the suture in the tissue to crimp the sleeve member and cut the free ends of the suture; and removing the suture securing instrument from the accessory tube.

[0021] Optionally, the suturing instrument and suture securing instrument may be used without the accessory tube when an internal working of biopsy channel is provided in the endoscope that permits the passage of the shaft of the suturing instrument and suture securing instrument, respectively.

[0022] The following description referring to the endoscope as a gastroscope for purposes of illustration. Other types of endoscopes may be used in the system and method.

BRIEF DESCRIPTION OF THE DRAWINGS

[0023] The foregoing objects, features and advantages of the invention will become more apparent from a reading of the following description in connection with the accompanying drawings, in which:

[0024] **FIG. 1** is a perspective view of the system in accordance with the present invention for application of a suture in tissue;

[0025] **FIG. 1A** is a partial view of endoscope shaft of **FIGS. 1 and 2** showing the attachment of a tube guide to the endoscope while enabling the accessory tube to be slidable through the tube guide in response to flexing of the endoscope's shaft;

[0026] **FIG. 1B** is an expanded view of the distal end of the system of **FIG. 1**;

[0027] **FIG. 2** is a perspective view of the system of **FIG. 1** with the suture instrument of the system removed;

[0028] **FIG. 2A** is an expanded view of the distal end of the system of **FIG. 2**;

[0029] **FIG. 3** is a perspective view of the accessory tube, cannula, attachment tip and tube guides of **FIGS. 1 and 2**;

[0030] **FIG. 4** is a perspective view of the tube guide of **FIG. 3**;

[0031] **FIG. 4A** is a side view of the tube guide of **FIG. 4**;

[0032] **FIGS. 5 and 5**A are front and back perspective views, respectively, of the attachment tip of **FIG. 3**;

[0033] **FIG. 6** is a perspective view of the cannula of **FIG. 3**;

[0034] **FIG. 7** is cross-sectional view of the cannula along lines **7-7** of **FIG. 6**;

[0035] **FIG. 8** is a perspective view of the suturing instrument of **FIG. 1**;

[0036] **FIG. 9** is a side view of the suturing instrument of **FIG. 1** in which the right cover of the housing of the instrument is removed;

[0037] **FIG. 10** is an exploded view of the suturing instrument of **FIG. 1** in which the right cover of the housing is removed;

[0038] **FIG. 10A** is a perspective view of the retainer member of the suturing instrument of **FIGS. 9 and 10**;

[0039] **FIG. 10B** is a side view of the cam member of the suturing instrument of **FIGS. 9 and 10**;

[0040] **FIG. 11** is a partially exploded perspective view of the adapter, needle spreader, and gasket member of the suturing instrument of **FIGS. 9 and 10**;

[0041] **FIG. 11A** is a cross-sectional view through lines **11A-11A** of **FIG. 11** showing the gasket member of the suturing instrument of **FIG. 11** without the suture tube or needles;

[0042] **FIG. 11B** is an end view of the gasket member of **FIG. 11** without suture tube or needles;

[0043] **FIG. 12** is a cross-sectional view along lines **12-12** of the suturing instrument of **FIG. 9**;

[0044] **FIG. 13** is a cross-sectional view along lines **13-13** of the suturing instrument of **FIG. 9**;

[0045] **FIG. 14** is a cross-sectional view along lines **14-14** of the suturing instrument of **FIG. 9**;

[0046] **FIG. 15** is a cross-sectional view along lines **15-15** of the suturing instrument of **FIG. 9**;

[0047] **FIG. 16** is a cross-sectional view along lines **16-16** of the suturing instrument of **FIG. 9**;

[0048] **FIG. 17** is a cross-sectional view along lines **17-17** of the suturing instrument of **FIG. 9**;

[0049] **FIG. 17A** is an exploded view of the coupler member, sew tip, and the guide member between the coupler member and sew tip, of the suturing instrument of **FIGS. 9 and 10**;

[0050] **FIG. 17B** is a perspective view showing the connection of the coupler member, sew tip, and the guide member of **FIG. 17A**;

[0051] **FIG. 17C** is a cross-sectional view along lines **17C-17C** of the **FIG. 17B**;

[0052] **FIG. 18** is a perspective view of the vacuum connection assembly of the suturing instrument of **FIGS. 9 and 10** for application of a vacuum or partial vacuum;

[0053] **FIG. 18A** is an exploded view of the vacuum connection assembly of **FIG. 18**;

[0054] **FIG. 18B** is a cross-sectional view of the vacuum connection assembly along lines **18B-18B** of **FIG. 18**;

[0055] **FIG. 18C** is a cross-sectional view along lines **18C-18C** of the suturing instrument of **FIG. 9**;

[0056] **FIGS. 19A and 19B** are perspective view of the valve seat and valve knob of the valve of the suturing instrument of **FIGS. 9 and 10**;

[0057] **FIG. 19C** is schematic diagram of an alternative valve for the suturing instrument of **FIGS. 9 and 10**;

[0058] **FIGS. 20A, 20B**, and **20C** illustrate the valve seat in response to the rotation of the valve knob from an open state to a closed state to seal one end of the suture tube of the suturing instrument of **FIGS. 9 and 10**;

[0059] **FIG. 21** is an exploded view of the distal end of the suturing instrument of **FIG. 9**;

[0060] **FIG. 21A** is an exploded view of the distal end of the **FIG. 9** showing the sleeve into which the tissue engaging end of the suturing instrument is received;

[0061] **FIG. 21B** is a side view of the tissue engaging end of the suturing instrument with the sleeve of **FIGS. 21 and 21**A;

[0062] **FIGS. 21C and 21D** are perspective views showing assembly of the sleeve of **FIGS. 21 and 21**A;

[0063] **FIGS. 22A-22H** illustrates at the tissue engaging end of the suturing instrument the process of applying one end of a loop of suture through tissue with either one the two needles of the instrument;

[0064] **FIG. 22I** illustrates at the tissue engaging end of the suturing instrument after both of the needles of the instrument have applied the two ends of the suture loop in the tissue, such that removal of the instrument leaves the suture loop through the tissue;

[0065] **FIG. 23** illustrates the operation of the tissue engaging end of the suturing instrument in accordance with another embodiment of the instrument without the outer sleeve of the tissue engaging end, where suction is not needed to capture tissue in applying a suture;

[0066] **FIG. 24** is a perspective view of the suture securing instrument of the system in accordance with the present invention to retain close the suture applied by the suturing instrument;

[0067] **FIG. 24A** is a side view of the suture securing instrument of **FIG. 24** in which the right cover of the housing of the instrument is removed;

[0068] **FIG. 24B** is an exploded view of the suture securing instrument of **FIG. 24** in which the right cover of the housing is removed;

[0069] **FIGS. 24C** is a cross-sectional view through lines **24**C-**24**C of the suture securing instrument of **FIG. 24A**.

[0070] **FIGS. 24D** is a cross-sectional view through lines **24**D-**24**D of the suture securing instrument of **FIG. 24A**.

[0071] **FIGS. 24E** is a cross-sectional view through lines **24**E-**24**E of the suture securing instrument of **FIG. 24A**.

[0072] **FIGS. 24F** is a cross-sectional view through lines **24**F-**24**F of the suture securing instrument of **FIG. 24A**.

[0073] **FIG. 24G** is a cross-sectional view through lines **24**G-**24**G of the suture securing instrument of **FIG. 24A**.

[0074] **FIG. 25** is exploded view of the distal end of the suture securing instrument of **FIG. 24**;

[0075] **FIGS. 25A and 25B** illustrate the assembly of the distal end of the suture securing instrument of **FIG. 24**;

[0076] **FIG. 25C** is a cross-section of the distal end of the suture securing instrument along lines **25**C-**25**C of **FIG. 25B**;

[0077] **FIGS. 26A-26D** illustrates the use of a loading device for placement of a sleeve member into the distal end of the suture securing instrument of **FIG. 24**, in which **FIG. 26D** further illustrates a guide wire loop for loading of suture in the instrument;

[0078] **FIGS. 26E-26I** illustrate use of the guide wire loop of **FIG. 26D** to load the suture through the sleeve member at the distal end of the suture securing instrument of **FIG. 24**;

[0079] **FIGS. 27A-27I** illustrates at the distal end of the suture securing instrument the process of fastening a sleeve member to retain the sutured tissue closed and cutting of the suture; **FIGS. 28A-28M** represent an example of the view through the endoscope for applying of a suture by the suturing instrument of the system of **FIG. 1** and then secured in place by a suture securing instrument of the system;

[0080] **FIG. 29A** is an example of the system of the present invention positioned in the gastroesophageal tract of a patient before insertion of the suturing instrument;

[0081] **FIG. 29B** is an example of the system of the present invention positioned in the gastroesophageal tract of a patient showing insertion of the suturing instrument through the accessory tube of the system;

[0082] **FIG. 29C** is an example of the system of the present invention positioned in the gastroesophageal tract of a patient after placement of the suture thread and removal of the suturing instrument from the accessory tube of the system;

[0083] **FIG. 29D** is an example of the system of the present invention positioned in the gastroesophageal tract of a patient showing placement of the suture thread loop in the suture securing instrument;

[0084] **FIG. 29E** is an example of the system of the present invention positioned in the gastroesophageal tract of a patient showing insertion of the suture securing instrument through the accessory tube of the system;

[0085] **FIG. 29F** is an example of the system of the present invention positioned in the gastroesophageal tract of a patient showing the secured suture remaining after removal of the suture securing instrument;

[0086] **FIG. 30** is a perspective view of another embodiment of the suturing instrument in the system of **FIG. 1** having enhanced flexibility;

[0087] **FIG. 31** is a schematic diagram of the needle assembly for each of the two needles in the embodiment of the suturing instrument of **FIG. 30**;

[0088] **FIG. 32** is an exploded view of the coupler member, sew tip, and multi-lumen tube in the embodiment of the suturing instrument of **FIG. 30** in which the needles are removed;

[0089] **FIG. 32A** is a partial perspective view of an example of the needles of **FIG. 31** extending through one end of the multi-lumen tube of **FIG. 32**;

[0090] **FIG. 33** is an exploded view of coupler member and sew tip of the embodiment of the suturing instrument of **FIG. 30** in which the multi-lumen tube of **FIG. 32** is replaced by two needle carrying tubes and one suture supply tube;

[0091] **FIG. 34** is an exploded view similar to **FIG. 33** showing in more detail the needle carrying tubes of **FIG. 33**; **FIG. 35** is a schematic diagram of the needle assembly of **FIG. 31** extending through one end of a needle carrying tube of **FIG. 33**;

[0092] **FIG. 35A** is a schematic diagram of alternative needle carrying tubes of **FIGS. 33-35**;

[0093] **FIG. 35B** shown in more detail one end of the needle carrying tube of **FIG. 35A**;

[0094] **FIG. 36** is an exploded view of the tissue engaging end of a further embodiment of the suturing instrument of the system of **FIG. 1** in which the vacuum connection assembly of the instrument is not required;

[0095] **FIG. 36A** is a side view of the tissue engaging end of the suturing instrument of **FIG. 36** with the attachment tip partially broken away;

[0096] **FIG. 37** is a perspective view of the tissue engaging end of the suturing instrument of the system of **FIG. 1** without a sleeve to provide rotational locking of the tissue engaging end in the attachment tip of the accessory tube;

[0097] **FIG. 38** is a side view of the attachment tip of the accessory tube to provide rotational locking with the tissue engaging end of the suturing instrument of **FIG. 37**, in which the interior of the attachment tip is partially broken away to show the slots into which the tissue engaging end can engage;

[0098] **FIG. 39** is a cross-sectional view along lines **39-39** of **FIG. 38**;

[0099] **FIGS. 40, 40A, 41, 42, 42A-42C**, and **45A-45D** are diagrams illustrating an optional hydraulic steering mechanism for the tissue engaging end of the suturing instrument of **FIG. 1** using a cylinder of **FIG. 42** and **42A** or folding piston of FIGS. **42B-C** and **45A-45D**; and

[0100] **FIGS. 43, 43A, 44**, and **44A** are diagrams illustrating an optional mechanical steering mechanism for the tissue engaging end of the suturing instrument of **FIG. 1**.

DETAILED DESCRIPTION OF THE INVENTION

[0101] Referring to **FIG. 1**, a system **10** for suturing is shown including an accessory tube **12** and an endoscope **14**, referred to herein after as a gastroscope, or other type of flexible endoscope having a shaft **14***a* coupled to the accessory tube, and a suturing instrument **16**. The suturing instrument **16** may be inserted in the accessory tube **12** as shown in **FIG. 1**, and is removable from the accessory tube **12** as shown in **FIG. 2**. The accessory tube **12** has access tubing **18** which is sufficiently flexible to be movable with the flexible shaft **14***a* of the gastroscope. Tubing **18** is braid reinforced with a braid of stainless steel, nylon, or Kevlar, to maintain the integrity of the tubing's circular cross-sectional shape and avoid kinking as the shaft **14***a* of the gastroscope bends when placed through the mouth into the gastrointestinal tract of a patient. The braiding may be located between two layers of tubing **18**, which are integrated with the braiding during their extrusion forming tubing **18**. For example, the outer diameter of tubing **18** may be 0.263 inches, while the internal diameter of tubing **18** may be 0.231 inches, and is such that a tissue engaging end **16***a* coupled to shaft **16***b* of suturing instrument **16** can pass through the tubing. Tubing **18** may be composed of pebax, polyurethane, or other flexible plastics of medical grade. The accessory tube **12** further has a cannula **20** attached to tubing **18** through which instruments, such as suturing instrument **16**, may pass. Cannula **20** is describe is more detail later in connection with **FIGS. 6 and 7**. Accessory tube **12** is shown as a separate component in **FIG. 2**.

[0102] Multiple tube guides **22** couple tubing **18** to shaft **14***a* of gastroscope **14**. Each tube guide **22** has an opening **22***a* extending through the tube guide and a curved surface **22***b* along its length which abuts the outer curved surface of shaft **14***a*, as shown in **FIGS. 1A**. **FIGS. 4 and 4A** show the tube guide **22** in more detail. Tube guides **22** may be attached to shaft **14***a* by a band of tape **24** having an adhesive layer to fix the tube guide to shaft **14***a*. Other attaching means are also be used, such as glue. The diameter of opening **22***a* is slightly larger than the outer diameter of tubing **18** such that the tubing **18** is slidable through opening **22***a* to enable the accessory tube **12** to move in concert with flexing, bending, rotation, or other movements of the gastroscope **14**. Tube guides **22** maintain tubing **18** substantial coaxial with shaft **14***a* of gastroscope **14**. Preferably, four tube guides are provided as shown in **FIGS. 1, 2**, and **3**, but other number of tube guides may be used.

[0103] At the distal end of accessory tube **12** is an attachment tip **26** having two openings **26***a* and **26***b* to receive one end of tubing **18**, and the distal end **14***b* of gastroscope **14**, respectively. Attachment tip **26** is shown in more detail in **FIG. 1B**, and as a separate component in **FIGS. 5 and 5A**. Tubing **18** is attached to attachment tip **26**, such as by glue or insert molding, while the gastroscope's distal end **14***a* is held by friction and seats in a shelf or lip **26***c* **(FIG. 5)** which forms a stop limiting forward movement of distal end **14***a*. The attachment tip **26** may be made of urethane or other molded plastic material. The length of the accessory tube **12** from its cannula **20** to attachment tip **26** may be, for example, **30** inches, but also may be of other lengths. Gastroscope **14** may be any typical gastroscope, such as that manufactured by Olympus, Inc., Pendax, Inc., Vision-Sciences, or Welch Allyn. For purposes of illustration, gastroscope **14** has at its upper end **14***c* a handle **27***a*, two dials **27***b* to steer the gastroscope, and various buttons/knobs to control typical gastroscope operation. The distal end **14***b* of the gastroscope has elements for imaging optics **28***a*, illumination **28***b*, water for cleaning imaging optics **28***c*, and a biopsy or working channel **28***d* representing tubing in communication with a port **27***c* at upper end **14***c*. A video display system **193 (FIG. 29B)** is coupled to upper end **14***a*, via a cable **27***d*, to allow viewing of tissue from its distal end **14***b* on a display via optics **28***a*. Although a gastroscope is referred to herein, any other flexible endoscope may similarly be used. FIGS. **2** and **2A** illustrate the accessory tube **12** and gastroscope **14** when no instrument is located in the accessory tube.

[0104] Cannula **20** may be a typical type of cannula providing a sealable passage to tubing **18**. For purposes of illustration, cannula **20** is shown in **FIGS. 1-3**, and in more detail in **FIGS. 6 and 7**. Cannula **20** has a housing **20***a* and a cap **20***b* which is received in housing **20***a*. Two seals **20***c* and **20***d* are provided in cannula **20** along a passage **21** from an opening **21***a* through which the shaft of an instrument may pass into tubing **18**. Tubing **18** is received in an opening **20***f* which extends into housing **20***a*. Seal **20***c* may be a duck-bill seal as illustrated in **FIG. 7**. An optional auxiliary port **20***e* has a bore **20***f* which opens to passage **21** through which water, air, or vacuum may be provided through tubing **18**. Although a cannula with two seals is described, the cannula may alternatively have a single seal. Seal **20***d* provides sealing about the shaft of an instrument, while seal **20***c* provides sealing when no instrument is located in the accessory tube **12**.

[0105] The assembly of the gastroscope **14** and accessory tube **12** when in the gastrointestinal or gastroesophageal tract of a patient provides the feature of enabling instruments, such as the suturing instrument, and the later to be described suture securing instrument, to be insertable and retractable about the distal end of the gastroscope, without requiring removal of the gastroscope. Further, normal functionality of the gastroscope in viewing is provided without any partial obstruction or loss of use of the working channel **28***d*. An illustration of the system **10** in a patient's body is shown in **FIGS. 29A-29F**.

[0106] Referring to **FIGS. 8-10**, the suturing instrument **16** of system **10** is shown. Suturing instrument **16** represents the SEW-RIGHT® SR•5™ manufactured by LaserSurge, Inc. of Rochester, N.Y., which has been modified to have a longer and partially flexible shaft **16***b* extending from a housing **30**, and means for selectably establishing suction to capture tissue at its tissue engaging end **16***a*. The tissue engaging end **16***a* and needles thereto may be similar to that shown in U.S. Pat. Nos. 5,431,666, 5,766,183, or European Patent No. EP 0669101, filed Feb. 23, 1995 and granted Oct. 14, 1998, which are herein incorporated by reference The shaft **16***b* represents an assembly of components 51-62 described below. Shaft **16***b* is rigid along a first section **32** when it extends from opening **31** in housing **30** and then is flexible along a second section **33** until coupling to the tissue engaging end **16***a*.

[0107] The housing **30** has a body shaped like a pistol having a handle portion **30***a*, and may be made of a two-piece construction of molded plastic. A pair of needles **34** and **35** extends from housing **30** through the shaft **16***b* into the tissue engaging end **16***a*. Each needle **34** and **35** has a non-tissue engaging end in the housing having a spherical member **34***a* and **35***a*, such as a ball or bearing, respectively, attached thereto. Both needles **34** and **35** and spherical members **34***a* and **35***a* may be a made of metal, such as surgical stainless steel. The spherical member **34***a* and **35***a* may have a bore into which the non-tissue engaging ends of the needles **34** and **35**, respectively, extend and joined thereto, such as by welding or brazing.

[0108] The suturing instrument **16** includes an actuator member **36** representing a lever having two pins **36***a* extending into holes in the sides of housing **30** upon which the actuator member is pivotally mounted in the housing. Actuator member **36** has a portion which extends through an opening **30***b* **(FIG. 10)** in housing **30** to enable pivotal movement about pin **36***a*. An extension spring **38** is provided which hooks at one end in a notch **36***b* of actuator member **36** and is wound at the other end around a pin **40** located in holes in the sides of housing **30**, such that the actuator member **36** is spring biased to retain actuator member **36** normally in a forward position, as shown for example in **FIG. 9**. The body of housing **30** has a front portion **31** **(FIG. 10)** providing a stop that limits the pivotal movement of the actuator member **36**. A notch **36***c* is provided in the actuator member **36** which is shaped to received one of the non-engaging ends of needles **34** or **35**, i.e., spherical members **34***a* or **35***a*, to be driven forward by an operator pulling actuator member **36** to pivot actuator member **36** towards handle portion **30***a*. Two grooves **36***d* **(FIG. 10)** are provided by three fingers **36***e* into which the needle **34** or **35** near the spherical members **34***a* or **35***a*, respectively, may lie.

[0109] A retainer member **42** is fixed in housing **30** by two flanges **42***a* above actuator member **36**. As best shown in **FIG. 10A**, the retainer member **42** has a chamber **42***b* having a lower opening **42***c* to chamber **42***b* and two grooves **42***d* formed by fingers **42***e* which allow the spherical members **34***a* or **35***a* of needles **34** or **35**, respectively, to be received in chamber **42***b* to restrict movement of the needle when held therein. The lower surface **42***f* of retainer member **42** is curved and faces correspondingly curved upper surface **36***f* of actuator member **36**, such that the actuator member **36** is slidable along lower surface **42***f* responsive to the operator pulling the actuator member.

[0110] To select which of the needles **34** and **35** is to be driven by actuator member **36**, the instrument **16** has a needle selection mechanism having a selector lever (or arm) **44** which is rotationally coupled with a cam member **46**. The cam member **46** and selector lever **44** is supported by an adapter **48** in housing **30**. Adapter **48** is mounted in housing **30** by two flanges **48***a*. The selector lever **44** is pivotally mounted by a pin **48***c* extending upwards from adapter **48** at a hole **44***a* through the lever. Selector lever **44** extends through an opening **30***c* in housing **30** and has a downwardly protruding member **44***b* which is received in a notch **46***a* of cam member **46** to rotate cam member **46** in a pocket **48***b* in the adapter **48** as the selector lever **44** is moved left or right. The cam member **46** may have a tapered surface **46***b* to facilitate its rotation in pocket **48***b* and two tapered apertures **46***c* through which needles **34** and **35** respectively extend, as shown in **FIG. 10B**. To select needle **34** to be driven, the selector **44** is moved right which rotates the cam member **46** to position needle **34** down and needle **35** up, such that end **34***a* is located in notch **36***c* and end **35***a* is located in chamber **42***b* of retainer member **42**. To select needle **35** to be driven, the selector **44** is moved left which rotates the cam member **46** to position needle **34** up and needle **35** down, such that end **35***a* is located in notch **36***c* and end **34***a* is located in chamber **42***b* of retainer member **42**.

[0111] The needle selector **44** may further have another downwardly protruding member **44***c* which rides in a slot **42***g* on the upper surface of retainer member **42**. The slot **42***g* is contoured to have angled lower regions on either side of a raised region into which member **44***c* can be located to releasably lock to retain the position of lever **44** left or right.

[0112] The adapter **48** has a bore extending there through in which a needle spreader **50** is located. Needle spreader **50** has two channels **50***b* and **50***c* into which needles **34** and **35** are respectively located to increase the distance between the needles **34** and **35** as they extend toward cam member **46**, such that the needles are properly aligned to apertures **46***b* in the cam member.

[0113] A suture routing tube **47** is provided for suture thread in housing **30**. Suture routing tube **47** has one end received in a valve assembly **19**, described later below, at the bottom of handle **30***a* of housing **30** and then extends through notches **30***d* **(FIG. 10)** along the interior of the left side of housing **30**, and a groove **50***a* along needle spreader **50** **(FIGS. 10 and 11)**. A cross-section through needle spreader **50** and adapter **48** is shown in **FIG. 12**. The other end of the suture routing tube **47** is then mounted in a hole **51***a* through gasket member **51**. Gasket member **51** further has two holes **51***b* and **51***c* through which needles **34** and **35**, respectively extend. A cross-section of shaft **16***b* through

gasket member **51** is shown in **FIG. 13**. The gasket member **51** may be made of medical grade rubber, such as Santoprene.

[**0114**] A longitudinal guide member **53** is provided multiple tracks along its length, including two needle tracks **53***a* and **53***b* for needles **34** and **35**, respectively, and a suture track **53***c* for suture thread extending from opening **51***a* of gasket member **51**. A cross-sectional view of shaft **16***b* through guide member **53** is shown in **FIG. 14**. The guide member **53** may be made of extruded flexible material, such as Tecoflex®. A rigid tube **52** is provided which is D-shaped at one end **52***a* is registered into a corresponding shaped opening in adapter **48**, and a threaded nut **54** having an opening which extends over mounting tube **52** and screws onto the end of the adapter **48** to secure tube **52** to housing **30**. With the gasket member **51** loaded first into rigid tube **53**, guide member **53** extends from the gasket member **51** through the rigid tube. In this manner, tracks **53***a*, **53***b*, and **53***c* each form a channel with the interior surface of rigid tube **52**. Rigid tube **52** may be made of stainless steel, or other rigid material, and has for example, rigid tube **53** has an outside diameter of 0.205 inches. **FIG. 11** shows the gasket member **51** prior to being positioned in abutment to needle spreader **50** and in end **52***a* of rigid tube **52**. For inside rigid tube **52**, gasket member **51** has a ring **51***d* which frictionally engages the interior surface of tube **52**, hole **51***a* of the gasket member is of a diameter such that the suture tube **47** tightly fits therein and provides a seal around suture tube **47**. The suture tube **47** may be held in place in hole **51***a* by friction, but adhesive may also be used. **FIGS. 11A and 11B** show gasket member **51** in more detail. Holes **51***b* and **51***c* are of a larger diameter than the needle, except for a small section of holes **51***b* and **51***c* where the diameter reduces to form flaps **51***e* and **51***f*, respectively of gasket material which seal around needles **34** and **35**, respectively. This enables movement of the needles back and forth while maintaining a seal about each needle. One feature of the gasket member **51** is that it enables sealing the shaft **16***b*, such that negative pressure, i.e., suction, may be selectively applied down the shaft via a vacuum connection assembly **64**, as described later below.

[**0115**] At the other end **52***b* of rigid tube **52**, a coupler member **56** is mounted in which two tabs **56***a* are received in two tracks **53***d* along two opposing sides of guide member **53**. Coupler member **56** joins the non-flexible section **32** of the shaft **16***b* provided by rigid tube **52** with the flexible section **33** of the shaft **16***b* (**FIG. 8**). Coupler member **56** may be composed of stainless steel. A cross-section of shaft **16***b* through coupler member **56** is shown in **FIG. 15**. The coupler member has a track **56***b* for suture, tracks **56***c* and **56***d* for needles **34** and **35**, respectively, and a central hole **56***e*. On the side of the coupler member **56** opposite guide member **53** is another longitudinal guide member **58** which extends through the flexible section of shaft **16***b* to the tissue engaging end **16***a*. Guide member **58**, like guide member **53**, is of an extruded flexible material, such as Tecoflex®. Guide member **58** has multiple tracks, including two needle tracks **58***a* and **58***b* for needles **34** and **35**, respectively, and a suture track **58***c* for suture thread extending from track **56***b* of coupler member **56**. A cross-sectional view of shaft **16***b* through guide member **58** is shown in **FIG. 16**. Two tabs **56***f* extend from the coupler member **56** into tracks **58***d* of guide member **58**. A wire **60** extends from the tissue engaging end **16***a* through a central hole **58***e* of guide member **58** and the central hole **56***e* of coupler member **56**, and then partly into a center hole **53***e* (**FIG. 14**) extending into guide member **53**. The wire **60** extends partly through central hole **53***e* to facilitate registration of guide member **53** to coupler member **56** and guide member **58**. The wire **60** is located in a central hole which extending into a sew tip **98** at the tissue engaging end **16***a* and attached thereto, such as by welding or brazing, passed through guide member **58** via hole **58***e*, and then extended through and in coupler member **56**, where it is attached to the coupler member, via a tube coupler **57**, such as by welding or brazing. This assembly is described in more detail below in connection with **FIG. 17C**. With the rigid tube **52**, gasket **51**, guide members **53** and **58** and central wire **60** in place, a plastic shrink wrap layer or tubing **62** is installed along shaft **16***b* from the vacuum connection assembly **64** until the tissue engaging end **16***a*, and shrunk in response to applied heat onto exposed surfaces of shaft **16***b*. About guide member **58**, tracks **58***a*, **58***b*, and **58***c* each form a channel with the interior surface of shrink wrap layer **62**.

[**0116**] The connection of coupler member **56**, guide member **58** and a sew tip **98** of the tissue engaging end **16***a* is best illustrated in **FIGS. 17A and 17B** in which tabs **56***f* of coupler member **56** are received in tracks **58***d* at one end of guide member **58**, and tabs **100** from sew tip **98** are received in tracks **58***d* at the other end of guide member **58**. Wire **60** extends through coupler member **56**, guide member **58** into a hole **98***h* extends into the rear section **98***i* of the sew tip **98** (**FIG. 21B**). The guide member **58** with the shrink wrap enables the flexible section **33** of shaft **16***b* to bend and flex while maintaining the channels extending there through, while the wire **60** provide longitudinal support to the flexible section as it is attached to non-flexible section **30** at coupler member and the sew tip. Further, needles **34** and **35** are sufficiently flexible to bend without deformation within guide member **58**. In order to translate rotational motion from the non-flexible section, tabs **56***a* and **56***f* of coupler member-are registered into tracks **53***d* and **58***d* of guide members **53** and **58**, respectively, and then tracks **58***d* of guide member **58** into tabs **100** of sew tip **98**. Thus rotation occurring at the non-flexible section, such as by rotation of housing **30**, is translated to tissue engaging end **16***a*.

[**0117**] **FIG. 17C** shows the attachment of wire **60**, coupler member **56**, and flexible section **33** of instrument **16** in more detail, such that possible damage to guide members from the heat of welding or brazing of metal components is avoided. The coupler member **56** has a recessed circular opening **56***h* to central hole **56***e* at the end **56***g* of coupler member **56** into which one end **57***a* of a wire coupler tube **57** is located. Wire coupler **57** represents a metal tube having an outer diameter sized to be received in recessed opening **56***h* and an inner diameter sized to receive there through wire **60**. Prior to attachment of coupler member **56** to guide member **53**, wire coupler **57** is first attached to coupler member **56**, such as by welding or brazing, about recessed opening **56***h* prior to the assembly of the flexible section **33** components, i.e., sew tip **98**, and guide member **58**, to coupler member **56**. Next, wire **60**, which has not yet been passed through coupler member **56**, is attached, such as by welding or brazing, into hole **98***h* (**FIG. 21B**) of sew tip **98**. Wire **60** is then slid through central hole **58***e* of guide member **58** and hole **56***e* of coupler member **56**, and the sew tip **98** at two tabs **100** frictionally engages into two tracks **58***d* of guide member **58** at one end of guide member **58**. At the other end of guide member **58**,

tabs **56***e* of coupler member **56** frictionally engages into tracks **58***d*. With the coupler member **56** integrated with guide member **58**, wire **60** is attached at end **57***b* of wire coupler **57**, such as by welding or brazing, which integrates the assembly of coupler member **56** with flexible section **33** of the instrument **16**, as shown in **FIG. 17B**. Thereafter, the coupler member **56** at its tabs **56***f* frictionally engages into tracks **53***d* of guide member **53**, such that wire **60** partly extends into central hole **53***e* of guide member **53**. The guide member **53** and coupler member **56** of the assembly are received into the rigid tube **52**, such that guide member **53** abuts gasket **51**, and coupler member is attached to rigid tube by mechanical fastening by forming small dents in the metal of the tube **52** with a press into recessed four pockets **56***i* **(FIG. 17A)**, i.e., two on each side of the coupler member **56**.

[0118] Referring to **FIGS. 18 and 18**A-C, a vacuum connection assembly **64** for suturing instrument **16** is shown. Vacuum connection assembly **64** includes a front housing member **66** which has a circular opening **66***a* to an interior chamber **66***b*, and a rear housing member **68** having a circular opening **68***a* extending there through. Rear housing member **68** has a first extension toward housing **30** providing a shaft **68***e* having an annular flange **68***b* and a second extension toward front housing member **66** providing a threaded shaft **68***c*. Shaft **68***c* is screwed in a threaded opening **66***c* **(FIG. 18B)** to chamber **66***b* of front housing member **66**, whereby surface **68***d* of the rear housing member tightly fits (mates) along surface **68***d* of the front housing member **66**. Circular opening **66***a* is coaxial with circular opening **68***a* through their respective housing members. A rubber O-ring **71** is provided in an annular groove in opening **66***a* of the front housing member **66**, while another O-ring **70** is provided in an annular groove in opening **68***a* of rear housing member **68**, as illustrated in **FIG. 18B**. A fitting member **72** is received in front member **66** in a recessed pocket **66***e* to a threaded opening **66***f* extending to chamber **66***b*, such that a port **74** is provided having a bore **75** to chamber **66***b*. Fitting member **72** is threaded along its surface **72***a* to enable the fitting member to screw into threaded opening **66***f* of front housing member **66**. Except for O-rings **70** and **71**, the components of vacuum connection assembly **64** may be made of stainless steel.

[0119] The vacuum connection assembly **64** is placed on rigid tube **52** so that the tube extends through openings **66***a* and **68***a*, O-rings **70** and **71**, and chamber **66***b*, and an opening **52***c* in the rigid tube lies in chamber **66***b* and faces bore **75** of the fitting member. The diameter of apertures **66***a* and **68***b* are slightly larger than the outer diameter of rigid tube **52** about opening **52***c*. O-rings **70** and **71** engage the outer surface of rigid tube **52** to seal chamber **66***b*, but for bore **75** and opening **52***c* to suture track **53***c* **(FIG. 18C)**. Flange **68***b* from rear housing member **68** is received in a pocket **37** **(FIG. 9)** formed when the left and right sides of housing **30** are mated to each other. A vacuum source may be applied via tubing (not shown) to port **74**, such that negative air pressure is provided in chamber **66***b* which may be communicated via an opening **52***c* of rigid tube **52** along a suture channel formed by suture track **53***c* of guide member **53** to suture track **58***d* of guide member **58** through track **56***b* of coupler member **56**, down to the tissue engaging end **16***a*. Vacuum connection assembly **64** may alternatively be coupled at port **74** to a source for air to provide positive air pressure along the same suture channel, i.e., to drive air down to the tissue engaging end **16***a*.

[0120] A valve **19** is provided at the bottom of handle **30***a*, as shown in **FIGS. 9 and 10**, having a valve seat **19***a* and a valve controller **19***b*, shown as separate components in **FIGS. 19A and 19B**. Valve seat **19***a* is composed of medical grade rubber, such as Santoprene®, and has a hole **76** extending into an interior chamber **78**. One side **79** of this chamber **78** has a lip **80** about an opening **81**. Protruding into the chamber **78** facing opening **81** is a raised member **82** of the valve seat **19***a* through which the hole **76** extends to an opening **84**, which is recessed near a surface **82***a* of the raised member **82**. The recess of opening **84** forms the shape of an eye having two opposing comers **86** when valve **19** is open. Two opposing fingers **88** of the raised member **82** extend from the top and bottom of the eye of opening **84**. A valve controller **19***b* composed of molded plastic, or other rigid material, has a circular section **90** having an opening **92** to an interior surface forming a cam **94**, and a recessed retainer ring **95**. Circular section **90** is received through opening **81** such that retainer ring **90** is captured by lip **80** to retain valve controller **19***b* in valve seat **19***a*. Fingers **88** and comers **86** of the raised member **82** of the valve seat lie against the surface of cam **94** of the valve controller **19***b*. The cam surface is wider along one dimension and narrower along a perpendicular dimension, such that when the fingers **88** lie along the narrower dimension, they compress the recess of opening **84** into a closet slit to close valve **19**, and when fingers **88** lie along the wider dimension, the recess of opening **84** returns to its normal shape and the valve **19** is open. Adjusting the dimensions of the cam surface **94***a* controls the amount of pressure applied to compress opening **84**, and thus the integrity of the closed valve's seal. Another hole **76***b* **(FIG. 9)** extends through opening **92** to the bottom **96***a* of turn knob **96** of the valve controller. The suture routing tube **47** is received in hole **76** of valve seat **19***a*, as shown in **FIG. 9**, such that suture material from the tube can pass through openings **76** and **84** of the valve seat and then through hole **76***b* of the valve controller.

[0121] As shown in **FIG. 20A**, the valve **19** is open when the finger **88** align along surface **94***a* and **94***b* of the cam **94**, and corners **86** are each received in corresponding detents **94***c* and **94***d* of cam **94**. To close valve **19**, a turn knob **96** of the valve controller **19***b* is rotated as shown in **FIG. 20B**. This starts compressing fingers **88** against the surface of the cam **94** until the fingers **88** lie in detents **94***c* and **94***d* compressing opening **84** of the valve seat to close the valve, as shown in **FIG. 20C**. To open the valve **19**, the turn knob **96** is again rotated until the corners **86** lie in detents **94***c* and **94***d*. The turn knob **96** may be rotated clockwise or counterclockwise to open and close valve **19**. Valve **19** may be closed to seal the suture tube **47** when suction is applied via vacuum connection assembly **64**, but allows suture to be drawn under slight tension through the valve.

[0122] Other types of valve **19** may alternatively be used, such as shown in **FIG. 19D**, which provides a seal, but enables the suture to be drawn under slight tension through the valve. In **FIG. 19C**, the bottom of handle **30***a* is shown in which the suture tube **47** is received in a duck-bill valve **128** providing a chamber **128***a* and two flaps **128***b* extending into the chamber along the length of suture **105** which extends through suture tube **47** between flaps **128***b* and through an opening **129** in housing **30**. In response to

negative air pressure in suture tube **47**, the two flaps **128***b* meet along edges **128***c* providing a seal about the suture **105** in chamber **128***a*. **FIG. 19C** illustrates the valve when closed, when open flaps **128***b* at edges **128***c* may separate from each other.

[**0123**] Referring to **FIGS. 21, 21A** and **21**B, the tissue engaging end **16***a* of the suturing instrument **16** is shown having the sew tip **98** which is mounted in a tip tube **102**, such that the front section **98***a* of the sew tip extends from tube **102**. The mounting of the tip tube **102** to the sew tip **98** may be achieved by mechanical fastening by forming small dents in the metal of the tip tube **102** with a press into recessed four pockets **98***b*, i.e., two on each side of the sew tip (**FIG. 17A**). The sew tip **98** has a gap **104** in a C-shaped jaw having two openings **98***c* at one side of the gap through which each of needles **34** and **35** may extend to capture ferrules **103** having one end of suture material **105** located in openings **107** at the other side of gap **104**, and after each needle captures a ferrule, the needle retracts back into their respective opening **98***c* carrying the suture material on its tip. A channel **98***d* is provided in the sew tip which aligns with suture track **58***c* of guide member **58**, as shown in **FIG. 17B**. The channel **98***d* extends along the length of the sew tip and then fork into two channels, each leading to one of the two openings **107** having ferrules **103** to which the end of the suture thread is attached. Openings **107** retain ferrules **103** but are slotted to enable release of suture after a ferrule **103** is captured. The operation of sew tip **98** will be described in more detail below in connection with **FIGS. 22A-22I**.

[**0124**] A vacuum sleeve **106** is provided having a tube **106***a*, and a rounded cap **106***b* which closes one end of tube **106**. The cap **106***b* has an edge **106***c* which mates with the edge **106***d* of tube **106***a* and two extending flanges **110** which are received in tube **106***a* to hold the cap in place (**FIGS. 21C and 21D**). Between flanges **110** the interior surface of the cap is angled to provide a ramp **112** (**FIG. 21B**). The sew tip **98** in tip tube **102** is received through the open end **106***f* of tube **106***b*, such that an opening **108** of tube **106***b* is located over gap **104** of the sew tip. The two flanges **110** of cap **106***d* register with the two sides of the forward part **98***g* of the sew tip **98** to properly align sew tip **98** and tip tube **102** in the vacuum sleeve **106**. The opening **108** represents a cut into tube **106***a* to provide a oval shaped window **108***a* and a forward slot **108***b* which extend from window **108***a* to the end of tube **106***a* meeting cap **106***b*, such that the forward (ferrule carrying) part **98***g* of the sew tip **98** partially extends through slot **108***b* (**FIG. 21B**). Cap **106***b* has a notch **106***e* located adjacent slot **108***b* at edge **106***d* of tube **106***a* (**FIG. 21D**). The ramp **112** is negatively sloped at an angle towards slot **108***b*, as shown in **FIG. 21B**, to facilitate the suturing process, as will be described later. Two fingers or prongs **103** extend from the sides of the tip tube **102** and are received in two corresponding openings **111** of the vacuum sleeve **106** to latch the sleeve in position over the sew tip. Guide member **58** extends into tip tube **102** as shown in **FIG. 18B21**B. Shrink wrap or tubing **114** is then applied over tube **106***a*, such that openings **111** are sealed closed, to complete the assembly of the vacuum sleeve **106**, as shown in **FIG. 21A**. A short metal ring **116** is placed over the end **102***a* of the tip tube **102** and the edge of the shrink wrap **62** extending along shaft **18***b*. In placing ring **116**, shrink wrap **62** is first applied over shaft **18***b* and tube **102**, and then cut back to an edge **106***a* of ring **116**. Tubes **102** and **106***a* are both made of metal, such as stainless steel, and cap **106***a* may be made of molded plastic. A cross-section of tissue engaging end **16***a* through the sew tip **98**, tip tube **102**, and vacuum sleeve **106**, is shown in **FIG. 17**. This vacuum sleeve **106** enables a vacuum or partial vacuum to be applied to the path of the suture following gasket member **51**, via the vacuum connection assembly **64**, to channel **98***d* of the sew tip **98**, such that the upflow of air into the gap **104** of the sew tip through opening **108** of vacuum sleeve **106** can pull the tissue into the gap. The suction from the vacuum or partial vacuum is applied to gap **104** of the sew tip **98** via two openings **98***e* in channel **98***d* to two cavities **98***f* each located on opposite sides of the sew tip in the space between the sides of sew tip **98** and vacuum sleeve **106** near gap **104** (**FIG. 21**). Although cap **106***b* as described herein is preferred, cap **106***b* may be provided by a metal cap **118**, such as of stainless steel attached to the end of tube **106***a*, and provides a small ramp **118***a*.

[**0125**] The tissue engaging end of suturing instrument **16** may be as described in U.S. patent application Ser. No. 09/686,420, filed Oct. 11, 2000, which is herein incorporated by reference. This Patent Application describes the loading of a length of suture material, i.e., thread, whose ends are affixed to ferrules in the sew tip **98**. Before such loading, the vacuum sleeve **106** is removed from tube tip **102** by pushing in fingers **103** to release them from openings **111** and then simultaneously pulling the vacuum sleeve **106** away from tube tip **102**. After loading, the vacuum sleeve **106** is replaced and latched back (i.e., fingers **103** in openings **111**) onto the tube tip **102** and the loop of suture extends from the ferrules through the suture tracks **53***a* and **58***a* of guide members **53** and **58** to suture routing tube **47**, via track **56***b* of the coupler member **56** and opening **51***a* of the gasket member **51**, out holes **76** and **76***a* of valve **19**. Proper orientation of the vacuum sleeve **106** over tube tip **102** and sew tip **98** is provided by flanges **111** of cap **106***b*, as described earlier, and also by ramp **112** being angled such that it prevents upside down misalignment of the vacuum sleeve over the sew tip. The forward section **98***g* of the sew tip will be stopped by ramp **112** before fingers **103** reach to the tube tip openings **111**, preventing the vacuum sleeve **106** from latching. For example, the suture material may represent monofilament suture material or braided suture material.

[**0126**] Referring to **FIGS. 22A-22I**, the operation of the suturing instrument **16** at the tissue engaging end **16***a* is shown after the suturing instrument is located, via accessory tube **12**, near the tissue to be sutured. **FIGS. 22A-22H** show the process of applying one end of the suture through tissue **120** with needle **34**, the same process is repeated for the other end of the suture for needle **35**. Suturing with needles **34** and **35** may be provided in any order. In **FIG. 22A**, the tissue engaging end **16***a* is shown with suture material **105** loaded in the sew tip **98**, such that the two free ends of the loop of suture extend from the suture track **58***a* of tube guide **58**, via a passage **98***d* of the sew tip **98**, to two ferrules **103** coupled to the two suture ends in the sew tip **98**. Opening **98***c* at one end of gap **104** face ferrules **103** in openings **107** for respectively needles **34** and **35**. The tissue engaging end **16***a* is placed adjacent a first target area **121** in tissue **120** where the first end of the suture will be placed (**FIG. 22B**). Suction is then applied to pull the target area **121** of tissue **120** via gap **104** of the sew tip through opening **108** in the vacuum sleeve **106** to capture a fold **124** of tissue **120** at

target area **121** (**FIG. 22C**). To apply suction, valve **19** is closed and a vacuum source, such as a vacuum pump **200** (**FIG. 29B**), provides suction to shaft **16***b*, via tubing, to port **74** of the vacuum connection assembly **64**. The vacuum is communicated into gap **104** via opening **52***c* of rigid tube **52** to the suction channel in shaft **16***b* formed by suture track **53***c* of guide member **53**, track **56***b* of coupler member **56**, and then suture track **58***d* through coupler member **56** to channel **98***d* and cavities **98**f of the sew tip **98**. Principally, the suction is applied to cavities **98***f*, however the suction may occur elsewhere about gap **104**, such as the space between the sew tip **98** and the interior surface of the vacuum sleeve **106**, or via openings **107**. With the suction maintained, and needle **34** selected by an operator using selector lever **44**, and the actuator member **36** is pulled by the operator towards handle **30***a* (**FIG. 8**), the needle passes through the tissue (**FIG. 22D**) and then into ferrule **103** (**FIG. 22E**), such that the tip **122** of the needle is captured in the ferrule. Although valve **19** is closed, the suture may be drawn through the valve seat **19***a*. The actuator member **36** rotates against the bias of spring **38** until needle tip **122** engages ferrule **103**. The amount of rotation of actuator member **36** depends on the distance the needle must transverse before engaging a ferrule, such distance may vary depending on the degree of flexing of shaft **16***b* along its flexible section **33**. The needle **34** is then retracted by the operator releasing actuator member **36**, to pass the needle and captured ferrule **103** back through the tissue (**FIG. 22F**) and into opening **98***c* (**FIG. 22G**). The suction generates negative air pressure near the tissue **120** sufficient to pull the tissue into gap **104** of the sew tip **98** without damaging the tissue. The suction is then discontinued, such as by turning off the vacuum source **200**, and the valve **19** opened to release the tissue from gap **104** of the sew tip (**FIG. 22H**). The end of the suture thread extends from the captured ferrule on the needle tip through tissue **120** to channel **98***d*. The suture releases through the slot extending along opening **108***b* and the suture extends from captured ferrule through the tissue to channel **98***d*. The process of **FIGS. 22A-22H** is then repeated at a second target area in the tissue with needle **35** selected to place the second end of the suture in the tissue. **FIG. 22I** shows the result after both suture ends are placed through tissue, where one suture end extends through tissue fold **124** and the other through fold **126**. For example, the second target area may be located directly after placing the first suture end through the tissue by rotating the housing **30** of the instrument **180** degree to rotate the tissue engaging end **180** degrees. The entire operation is observed by the operator via the gastroscope, and in this manner, the first and second target located by the operator in the tissue. The operator may be a surgeon, gastroenterologist, or other skilled physician.

[**0127**] Alternatively, the suturing instrument may operate to apply a suture without suction if the target area of tissue can be sufficiently received in gap **104** of the sew tip **98**. For example, the target area may represent a raised portion of tissue to be sutured. Further, the suturing instrument operating without section, may be used with the vacuum sleeve **106** removed from the tissue engaging end **16***a*, such as shown for example in **FIG. 23**.

[**0128**] After two ends of the suture have been placed through the tissue, as illustrated in **FIG. 22I**, the suturing instrument **16** is removed from the accessory tube **12**, which pulls the loop of suture, which extended from housing **30**, down to tissue **120**. As the suture passes through the tissue engaging end **16***a*, the suture follows from channel **98***d* of the sew tip over the ramp **112** and notch **106***e* of cap **106***b*. The suture may then be secure by a suture securing instrument **130** described below.

[**0129**] Referring to **FIGS. 24, 24A**, and **24**B, the suture securing instrument **130** of the system is shown having a housing **132** similar to housing **30** of suturing instrument **16**. Suture securing instrument **130** represents the Ti-KNOT® TK•5™ manufactured by LaserSurge, Inc. of Rochester, N.Y., except that its shaft **134** is longer and partially flexible, and means are provided for calibrating the length of a drive wire to the distal end **136** of the instrument **130**. The distal end of instrument **130** may be similar to that described in U.S. Pat. Nos. 5,669,917, 5,643,289, 5,520,702, or European Patent Application No. 95102587.3, filed Feb. 23, 1995 and published Feb. 2, 1994 under Publication No. 0669103A1, which are herein incorporated by reference. The suture securing instrument **130** includes an actuator member **138** representing a lever having two pins **138***a* extending into holes in the sides of housing **132** upon which the actuator member is pivotally mounted in the housing. Actuator member **138** has a portion which extends through an opening **132***a* in housing **132** to enable pivotal movement about pin **138***a*. A extension spring **140** is provided which hooks at one end in a notch **138***b* of actuator member **138** and is wound at the other end around a pin **141** located in holes in the sides of housing **132**, such that the actuator member **138** is spring biased to retain actuator member **138** normally in a forward position, as shown for example in **FIG. 24A**. The body of housing **132** has a front portion **132***b* providing a stop that limits the pivotal movement of the actuator member **138**. A pivot barrel **142** is coupled by a pin **144** which extends through an opening **142***a* through the pivot barrel and two holes **143** between flanges **144** of actuator member **138**. A turnbuckle **146** is provided representing a tubular member which has an interior surface right-hand threaded from one end and left-hand threaded from the other end. The turnbuckle **146** is attached to a threaded circular end **142***b* of pivot barrel **142** and then to the threaded circular end **148***a* of a ball connector **148**. The ball connector has a ball **148***b* having a hole **148***c* there through. Drive tube **150** has one end **150***a* into which ball **148***b* is received and then coupled to the tube, via a pin **149**, which extend through hole **148***c* of the ball **148***b* and two holes **150***c* in drive tube **150**. An adapter **152** is received in the other end **150***b* of the driver tube **150** and has a hole partially extending there through in which is received and attached a drive wire **154**. The adapter **152** is mounted in driver tube **150** for rotational movement about an annular groove **152***a* of the adapter **152**. Multiple detents (not shown) are formed in the tube **150**, such as by deforming the metal by pressure, over the annular groove **152***a*. The detents extend into the annular groove **152***a* to form a track guide within which the adapter **152** may be rotated.

[**0130**] Another adapter **156** is provided which has flanges **156***a* received in the two sides of housing **132**. A rigid tube **158** having an end **158***a* which is D-shaped is registered into a corresponding shaped opening in adapter **156**, and a threaded nut **160** having an opening which extends over mounting tube **158** and screws onto the end of the adapter **156** to secure tube **158** to adapter **156**. Rigid tube **158** extends from housing **132** via an opening **130***d* in the housing. The assembly of components **142**, **146**, **148**, **150**,

152, and **154** described above are received in the adapter **156** and through rigid tube **158**, as shown in **FIG. 24A**. A cross-section of the adapter **156** and rigid tube **158** at pin **149** is shown in **FIG. 24C**. Cross-section of shaft **134** through the rigid tube **158** at the drive tube is shown in **FIG. 24D**, and at the adapter **152** in **FIG. 24E**. The drive tube **150** is moveable through rigid tube **158**. At the other end **158***b* of the rigid tube **158** is another adapter **162** which is cylindrical and has a central hole **162***a* extending there through. The adapter **162** is mounted in tube **158** by mechanical fastening in which small dents in the metal of the tip tube formed with a press into two slots **162***b* on either side of the adapter **162**. The drive wire **154** extends through hole **162***a* of the adapter **162** and into an extension tube **164** which extends from the adapter **162** to the distal end **136** of instrument **130**. Extension tube **164** is a stainless steel tube having for example, an inner diameter of 0.041 inches and an outer diameter of 0.059 inches, and is mounted in hole **162***a* of adapter **162**, such as by welding or brazing, while enabling movement of the drive wire through adapter **162** and extension tube **164**. Drive wire **154** may be, for example, stainless steel music wire. A cross-section of shaft **134***b* through extension tube **164** is shown in **FIG. 24F**. Pivot barrel **142**, turnbuckle **146**, ball connector **148**, drive tube **150**, adapter **152**, rigid tube **158**, and adapter **162** may be made of metal, such as stainless steel, while adapter **156** may be made of molded plastic.

[**0131**] The assembly of the distal end **136** is best shown in **FIGS. 25, 25A**, and 25B. A tip tube **166** is provided having an end **166***a* into which is inserted a couple member **168** having an edge **168***a* which mates along the edge **166***b* of tip tube **166**. The end **164***a* of extension tube **164** is received into a central hole **168***b* through coupler member **168** in which the drive wire **154** extends through the coupler member **168** and is received and attached in opening **171** (**FIG. 25C**) in a wedge tip section **170**, where it is attached thereto, such as by welding or brazing. The wedge tip section **170** has a slot **170***a* partially there through into which is received the hammer and anvil section **172**, such that the hammer and anvil section is slidable in slot **170***a*. Sections **170** and **172** are received in the tip tube **166**. A pin **176** extends through two holes **166***d* and an opening **172***a* through hammer and anvil section **172** to retain section **172** in tube **166**.

[**0132**] A chamber **173** is provided in the hammer and anvil section into which a securing sleeve member **174** (**FIG. 25B**) is located. The securing sleeve member **174** may be a Titanium Knot™ titanium tube manufactured by LaserSurge, Inc. of Rochester, N.Y. Cross-sections through the distal end **136** of the suture securing instrument are shown in **FIGS. 24G and 25C**. The wedge tip section has an upper member **170***b* and a lower member **170***d* having a knife **170***d* when wedge tip section **170** is driven forward upper member **170***b* abuts ramp **172***d* of the hamper and anvil section **172** to first push hammer **172***b* down to deform and crimp sleeve member **174** against anvil **172***c*, and then knife **170***d* cut sutures extending from sleeve member **174** near opening **166***e* of tip tube **166**. Thus, with ends of suture extending through the sleeve member **174** and exit the opening **166***e* of the tube tip **166**, wedge tip section **170** and the hammer and anvil section **172** provides for crimping the sleeve member to retain the suture and then cuts the suture in response to forward movement of the drive tube **150** and drive wire **154**. Drive tube **150** and drive wire **154** are moved forward by an operator pulling actuator member **138** towards handle **132***c* of housing **132**, as will be described in more detail in connection with **FIG. 27A**-H. Rotation of adapter **152** in tube **150** facilitates freedom of wedge tip **170** to translate, or tilt, along its center axis, which extends in the direction of wire **154**, as the wedge tip is driven forward against the ramped surface of hammer **172***b*. Rotational movement of actuator member **138** is enabled by pivoting of the pivot barrel **142** about the axis defined by pin **144** in flanges **145**.

[**0133**] Before attachment of the distal end **136** to extension tube **164** through which drive wire **154** extends, tube **164** is passes through a flexible plastic tubing **178**, such as of Tygon. This tubing **178** extends from end **158***b* of rigid tube **158**, until distal end **136** when mounted to extension tube **164**. The diameter of tubing **178** is substantially matched to the outside diameter of tube **158** and tip tube **166**. A shrink wrap layer **180** is applied on the entire length of shaft **134** of instrument **130** until distal end **136**.

[**0134**] The entire length of the instrument **130** is such that it can extend through accessory tube **12** in which its shaft **134** has a non-flexible section **134***a* defined by the extend of rigid tube **158**, and a flexible section defined by the extent of extension tube **164** in tubing **178**. For example, the shaft **134** may be 31.5 inches in length, where its non-flexible section **134***a* is 12.0 inches in length, and the flexible section **134***b* is 19.5 inches in length.

[**0135**] Referring to **FIGS. 26A-26D**, the loading of sleeve member **174** into the distal end **136** of the suture securing instrument **130** is shown using a flexible holder **182** having a outer groove (not shown) around which a wire **184** is passed to forming a loop. This loading holder is commercially available as a Ti-KNOT® TK•5™ Quick Load™ unit from LaserSurge, Inc., Rochester, N.Y. Holder **182** may be made of molded rubber, and having an opening **182***a* for the fingers of an operator. The ends of the wire loop **184** are attached to a C-shaped or curved handle **186**, which may be composed of metal. A sleeve member **174** is slid along ring **186** until reaches the end of the ring at **186***a* (**FIG. 26A**). The ring **186** is then passed through chamber **173** of the distal end **136** between the hammer **172***b* and anvil **172***c* of section **172** and then exits through opening **166***e* of the tip tube **166** (**FIG. 26B**), until sleeve member **174** is located in chamber **173** (**FIG. 26C**). The flexible holder **184** may then be removed (**FIG. 26D**).

[**0136**] Referring to **FIGS. 26E-26I**, the loading of the two ends of a loop of suture **105** through a loaded sleeve member **174** in the distal end **136** of the suture securing instrument **130** is shown. The two ends of suture **105** are passed through the wire loop **184** (**FIG. 26E**), as shown by arrow **188**, and are captured by the wire loop as the C-shaped handle **186** is used to pull the wire loop through the sleeve member **174** (**FIG. 26F**) and opening **166***e* of the tube tip **166**, thereby pulling the two ends of the loop of suture through the sleeve member and opening **166**e in the direction indicated by arrows **190-192** (**FIGS. 26G-26I**).

[**0137**] **FIGS. 27A-27H** shows the operation of suture securing instrument **130** to secure and cut the suture. With the ends of the loop of suture **105** extending through the sleeve member **174** at the distal end **136** of the suture securing instrument **130**, the instrument maybe inserted into the accessory tube **12** down to the tissue through which the suture loop extends. The ends of the suture are pulled

through the distal end **136**, until sleeve member **174** is located adjacent the tissue (**FIG. 27A**). An operator then pulls the actuator member **138** towards handle **132***c*, driving forward the wedge tip section **170** in which the motion is translated through shaft **134** via pivot barrel **142**, turnbuckle **146**, ball connection **148**, through drive tube **150** and drive wire **154**. In response, the upper member **170***b* of the wedge tip section **170** slides forward against hammer **172***b* deforming the sleeve member against anvil **170***c* to retain the suture. **FIGS. 27B-27E** illustrates the downwards movement of the hammer deforming on the sleeve member as the wedge tip section **170** is driven forward. The knife **170***d* at the lower member **170***c* of the wedge tip section **170** is also driven forward against the suture (**FIG. 27F**), to cut the ends of the suture near the sleeve member **174** (**FIG. 27G**). The operator then releases the actuator member **138** which automatically retracts in response to the forward bias by spring **140**, and the wedge tip section **170** retracts releasing the sleeve member **174** from between hammer **172***b* and anvil **172***c* (**FIG. 27H**). The distal end **136** of suture instrument **130** is then removed leaving the crimped sleeve member **174***a* to retain the sutured tissue closed (**FIG. 27I**).

[**0138**] Referring to **FIGS. 28A-28M** and **29**A-**29**F the overall operation of system **10** will now be described in which **FIGS. 28A-28M** illustrate examples of the images on a display **193** provided by the gastroscope **14**, and **FIGS. 29A-29F** illustrate the relative position of the gastroscope **14**, accessory tube **12**, and instruments **16** and **130** during suturing and suture securing. With the patient **194** ready for the procedure, the gastroscope **14** and attached accessory tube **12** are inserted through the mouth **195** down the esophagus **196** and into the stomach **198** where the suturing will take place (**FIG. 29A**). The suturing instrument **16** with a loop of suture **105** loaded is then inserted into the accessory tube **12** via cannula **20**, until the distal end **16***a* passes through attachment tip **26** (**FIGS. 28A and 29A**). The tissue engaging end **16***a* of the suturing instrument **16** is viewable to the operator on display **193** through the gastroscope (**FIG. 28A**). With the target area of the tissue located, the valve **19** is closed, and suction is applied to instrument via a vacuum source **200** and control (or regulator) **202** via tubing **201** to pull the tissue into gap **104** of sew tip **98**, as described earlier (**FIG. 28B**). Control **202** may be integrated in vacuum source **200** or along tubing **201**, and is used to selectably enable and disable suction to the sew tip **98** in vacuum sleeve **106**. A first one of needles **34** or **35** is then extended and retracted by the operator, as described earlier, to locate the first end of the suture in the tissue. The suction is then disabled, valve **19** opened, and the sew tip is lifted leaving the suture extending through the tissue (**FIGS. 28C, 28D**, **28**E, and **28**F). The target area for the second end of the suture is then located, valve **19** closed, and vacuum again enabled to pull the tissue into the sew tip **98** (**FIG. 28F**). A second one of the needles **34** or **35** is extended and retracted to locate the second end of the suture in the tissue. The suction is then disabled, valve **19** opened, and the sew tip lifted leaving the suture extending through the tissue. **FIG. 28G** shows an image of the first and second ends of the suture in the tissue. The suturing instrument **16** is then removed from the accessory tube as shown in **FIG. 29C**, pulling a loop **105***a* of suture **105** through the stomach tissue (**FIGS. 28H-28J**). The ends of the suture material are cut from the suturing instrument **16** and then loaded through the suture securing instrument **130** which has been loaded with a sleeve member **174**, as shown in **FIG. 29D**. The suture securing instrument **130** is then inserted into the accessory tube **12** while gentle tension is applied to the free ends of the loop of suture (**FIG. 28K**). The distal end **136** of the suture securing instrument passes through the attachment tip **26** and is located near the suture loop extending from the tissue (**FIG. 28L**). The suture securing instrument **130** is positioned adjacent to the tissue, appropriate suture tension applied and the instrument is then actuated as described earlier to crimp and cut the sleeve member (**FIG. 28M**), and then the instrument **130** is removed leaving the crimped sleeve member **174***a* to close the suture (**FIG. 28N**). **FIG. 29F** illustrates the patient after the suture is closed and the suture securing instrument is removed. The gastroscope **14** and attached accessory tube **12** remains in the patient during both the suturing and suture securing operations, and this procedure does not require the use of an overtube. If additional suturing is required, the suturing instrument **16** may be reloaded with another suture loop and above described procedure repeated with the suture securing instrument reloaded with another sleeve member to secure the suture closed. In this manner, multiple sutures may be made in the stomach tissue with a single insertion of the gastroscope **14**. When suturing is completed, the gastroscope **14** and attached accessory tube **12** are removed from the patient.

[**0139**] Although the suturing instrument **16** and suture securing instrument **130** are described for use with gastroscope **14**, instruments **16** and **130** may be used separately from the gastroscope **14** and accessory tube **12**. Further, suturing instrument **16** and suture securing instrument **130** may pass through an internal channel **28***d* (**FIG. 1B**), often called a working or biopsy channel, provided in gastroscope **14** to its distal end **14***a* sized to receive the respective shaft of the instrument.

[**0140**] Referring to **FIGS. 30-35**, another embodiment of the suturing instrument **16** is shown to provide additional flexibility within section **33** of shaft **16***b* of the instrument. This additional flexibility facilitate further freedom for section **33** to flex in the accessory tube **12** with the flexing of gastroscope shaft **14***a* in positioning the distal end **14***b* of the gastroscope. Suturing instrument **16** is the same in this embodiment except for the components in section **33** between coupler member **56** and sew tip **98**. Needles **34** and **35** in this embodiment are illustrated in **FIG. 31** as needle assembly **203**. For illustration purposes, needle assembly **203** for needle **34** is shown, since needles **34** and **35** are identical. A needle driver **204** is coupled to ball **34***a* by welding or braising into a hole in the ball. Needle driver **204** is a stainless steel wire or tube. A cable **206** is received in a hole **205** in one end **204***a* of needle driver **204**. A spring **207** is installed at one end **207***a* over the cable **206** and attached, such as welded or crimped, to end **204***a* of the needle driver **204**. The other end of cable **206** is received in a hole **209** at end **208***a* of needle **208**, and the end **207***b* of spring **207** is attached such as welded or crimped, to end **208***a* of the needle. Cable **206** is a stainless steel wire or braided cable. Spring **207** is a stainless steel extension spring which is normally compressed, and has an inner diameter slightly larger than the outer diameter of cable **206**. For example, inner diameter of spring **207** may be 0.020 inches, and the outer diameter of cable **206** may be 0.018 inches. The outside diameter of spring **207** may be matched to the outside diameters of needle driver **204** and needle **208**. The

length of needle driver **204**, needle **208**, and cable **206** in spring **207**, is such that the tip **122** of the needle **208** lies in the sew tip **98** when the needle is fully retracted.

[**0141**] Needle assembly **203** for each of needles **34** and **35** extends through a multi-lumen tube **210** which is attached at end **210***a* to coupler member **36** by tabs **56***f* being received in corresponding pockets **212** at end **210***a*, and is attached to sew tip **98** by tabs **100** of sew tip **98** in pocket **214** at end **210***b*. For purposes of illustration, needles are not shown in **FIG. 32**. Multi-lumen tube **210** is made of flexible material, such as plastic, polyurethane, or pebex, and has two holes **216** through which needles **34** and **35**, respectively, each extend, as best shown in **FIG. 32A**, where the spring **207** and needle **205** are shown through holes **216**. The holes **216** have a diameter slightly larger than the outside diameter of the spring **207**. The tube **210** is longitudinally reinforced, such that it cannot be substantially stretched or elongated. Such longitudinally reinforcement of the tube may be provided by a stainless steel kevlar, or nylon weave installed in the tube when it is extruded, or the weave may be adhesively bonded to the outer surface of tube **210**. A suture hole **218** extends through tube **210** for passage of suture, and negative or positive air pressure, similar to hole **58***d* of guide member **58**. End **204***a* of needle driver **204** and end **208***a* of needle **208** are located in tube **210** for each needle in holes **216**. Attachment of tip tube **102**, ring **116**, and sew tip **98** is the same as described earlier.

[**0142**] The operation of suturing instrument **16** in this embodiment is the same as described earlier, except that when actuator member **36** of instrument **16** is pulled by an operator for needle **34** or **35**, forward movement is translated to needle **208** via needle driver **204** and spring **207**, which compresses to assist in pushing forward needle **208** in sew tip **98**. When actuator member **36** is retracted, the cable **206** and spring **207** assist in pulling needle **208** back.

[**0143**] Alternatively in this embodiment, the multi-lumen tube **210** may be replaced by needle carrying tubes **220** and suture supply tube **222**. The needle assembly **203** for each of needles **34** and **35** extends through tubes **220**, respectively, as shown in **FIGS. 33 and 34**, while the suture supply tube **222** provides a path for suture to sew tip **98**, and also can provide negative (or positive) air pressure, as described earlier via vacuum connection assembly **64**. Supply tube **222** extends from chamber **66***b* of vacuum connection assembly **64** through hole **53***c* of guide member **53**, through suture track **56***b* of coupler member **56**, and then along flexible shaft section **35** to sew tip **98**. Tubes **220** and **222** may be made of flexible stainless steel tubing or reinforced plastic, pebex, or polyurethane tubing, or nickel titanium tubing, such as nitnol. **FIG. 35** shows needle assembly **203** at one end of tubing **220**. In this embodiment, shrink wrap **62** (**FIG. 10**) covers multi-lumen tube **210**, or tubes **220** and **222** if no multi-lumen tube is used, such as described earlier for guide member **58**. Optionally, to enhance needle carrying tubes **220** flexibility, the tubes **220** may each represent a wound spring **234** with outer sheath **236**, such heat shrink tubing, on the outside surface of the spring **234**, as shown in **FIGS. 35A and 35B**. The interior diameter of the spring **234** is slightly greater than the outside diameter of needle assembly **203** extending there through. The outer sheath **236** is shrunk to the spring only at the ends **234***a* and **234***b* of the spring **234**, such that elongation of spring **234** is restricted. The interior diameter of outer sheath **236** is larger than outside diameter of spring **234** to allow flexure of spring **234**.

[**0144**] Referring to **FIGS. 36 and 36**A, a further embodiment of suturing instrument **16** is shown in which suction to the sew tip is provided without vacuum connection assembly **64**. In this further embodiment, both the vacuum connection assembly **64** and opening **52***c* to rigid tube **52** is removed, and an opening **224** is provided through the shrink wrap **62** to suture track **58***c* of guide member **58**. An additional ring seal **227** (**FIG. 36A**) is provided in the opening **26***b* extending through attachment tip **26**. Ring seal **227** is composed of the same material as attachment tip **26**, and represents a ring extending from the interior surface of the opening **26***b* having a diameter slightly smaller than the largest diameter of tissue engaging end **16***a*. The tissue engaging end **16***a* can pass through the seal **227**, while ring seal **227** engages the outer diameter of the tissue engaging end. Suction may then be applied via cannula port **20***e* (**FIG. 6**) of the accessory tube **12** and communicated through opening **224** to the suture channel, i.e., suture track **58***c* and channel **98***d* to cavities **98***f* gap **104** of the sew tip **98**, as described earlier, when instrument **16** is located through accessory tube **12**. This suction may be provided from vacuum source **200** (**FIG. 29B**) through controller unit **202** and tubing **201** to port **20***e*, rather than to the vacuum connection assembly **64**.

[**0145**] Referring to **FIGS. 37-39**, system **10** may optionally have positional locking of tissue engaging end **16***a* to lock the rotational position and to limit forward longitudinal travel of the tissue engaging end **16***a* of the suturing instrument in attachment tip **26** of the accessory tube **12**. Such locking is provided by adding one or more protrusion members **226** to ring **116** of tissue engaging end **16***a*. For example, ring **116** may have two protrusion members located 180° apart along the outer circumference of ring **116**. These protrusion members **226** may be made of stainless steel or molded from plastic, and attached, such as adhesively bonded, or if medal by welding or brazing, to the outer surface of ring **116**. Protrusion members **226** are shaped to be received by slots **228** in opening **26***b* extending through attachment tip **26**. For example, eight slots **228** are provided at 30 degree increments about the interior surface of opening **26***b*, such that two protrusion members **226** may be received in one of four opposing (180° apart) pairs of slots **228**. Lesser or greater numbers of slots may also be provided. Each slot **228** extends from end **230** of attachment tip **26** partially into opening **26***b* to provide a stop **231**. The height of the protrusion member **226** from the outer surface of ring **116** is slightly less than the depth of the slots **228**, and width of the protrusion members **226** is slightly less than the width of slots **228**, such that protrusion members **226** can easily engage with an opposing pair of slots **228**. Protrusion members **226** each have a forward round-shaped end **226***a* that facilitates the alignment of the protrusion members **226** in slots **228** to limit instrument **16** rotation and forward travel.

[**0146**] In operation, when the tissue engaging end **16***a* of the instrument **16** passes through accessory tube **12** and through the attachment tip **26**, the distal end **14***a* of the gastroscope **14** can view the vacuum sleeve, and partially the sew tip therein, prior to engagement of protrusion members **226** in a pair of opposing slots **228**. The operator then can precisely locate the position of gap **104** of the sew tip with respect to a tissue target area **121** (**FIG. 22B**), as described

earlier. With the target area located and sew tip gap **104** aligned to face the target area, and substantially parallel thereto, the operator slightly rotates the instrument at housing **30**, such by handle **30***a*, and pushes the instrument to locate and engage the protrusion member **226** of ring **116** of the tissue engaging end **16***a* in the closest pair of opposing slots **228** in opening **26***b* of the attachment tip **26** which corresponds to the desired aligned rotational position of the sew tip's gap **104** with respect to the tissue target area, until protrusion members' end **226***a* abut stop **231**. Once the tissue engaging end **16***a* is so rotationally locked in position, the risk of rotational misalignment of the sew tip gap **104** when tissue is captured therein is reduced. To select another target area **126** (**FIG. 22F**), the operator rotationally unlocks tissue engaging end **16***a* by pulling the instrument handle **30** slightly back which disengages the protrusion members **226** from slots **228**.

[**0147**] Referring to **FIGS. 40, 40A, 41, 42**, and **42**A, optionally the suturing instrument **16** may have a steering mechanism for flexing needle engaging end **16***a*. This steering mechanism includes a control cylinder **238** having walls defining an interior chamber **240** having therein a plunger or piston **242** attached to the end of a threaded shaft **244***a*, which is held in the chamber **240** by a threaded nut **246** (**FIG. 40A**). The threaded nut **246** is attached to the chamber **240** by insert molding. A thumb wheel **248** attached to the turn screw **244** enabled the shaft **244***a* of the turn-screw to rotate along threaded nut **246** and control the position of the piston **242** in chamber **240**. Piston **242** has a rubber ring seal **243** which engages the interior surface **240***b* of chamber **240**. An opening or outlet **248** at one wall of chamber **240** provides a flow path for the volume **241** of liquid **245** contained in the chamber **240**, where this volume **241** is defined by the surface **242***a* of the piston **242** facing opening **248** and the interior surface **240***b* of the chamber **240**.

[**0148**] As shown in **FIG. 40**, at least one exterior surface of a wall of control cylinder **238** is molded into housing **30**, or the control cylinder **238** is applied by adhesive to the outer surface of housing **30**. Shaft **244***a* and nut **246** may be made of stainless steel, while walls of chamber **240**, piston **242** and thumb wheel **248** may be made of plastic, such ABS. In housing **30**, a flexible tube **250** is coupled at one end to outlet **248** and extends through an opening **252** located in the rigid tube **52** after gasket member **51** and before vacuum connection assembly **64**, and then tune **250** follows a path along one of tracks **53***d* of guide member **53** in rigid tube **52**, and through a hole **254** of coupler member **56** extending through its tab **56***a* and **56***d* (as shown in dashed lines in **FIG. 41**). From coupler member **56**, the tube **250** extends along one of tracks **58***d* of guide member **58** to a cylinder **256** located in the track **58***d* before sew tip **98** (**FIG. 42**). For example, tube **250** may be made of flexible plastic material. As shown in **FIG. 42A**, cylinder **256** has walls defining a interior chamber **256***a* having an opening **256***b* in one wall to this chamber which the other end of tube **250** is connected, such as by adhesive bonding. A piston or plunger **256***c* in chamber **256***a* is coupled to a rod **258** extending through an opening **256***d* in a wall of the chamber. The surface **256***e* of piston **256***c* faces opening **256***b* and is positionable in chamber **256***a* to change the volume **257** of liquid **245** contained in the chamber, where volume **257** is defined by surface **256***e* of the piston **256***c* and the interior surface **256***f* of cylinder **256**.

[**0149**] Rod **258** has at its end **258***a* a hole **258***b* into which a flexure member **260** is attached, such as by welding or crimping. Flexure member **260** extends into a hole in one end of tabs **100** of sew tip **98**, and is attached thereto by welding or crimping. Flexure coupler **260** allows for possible misalignment between rod **258** and tab **100** of the sew tip **98**. Cylinder **256** is fixed in place in one of tracks **58***d*, such as by frictionally engagement when shrink wrap tubing **62** is applied over guide member **58**, or may be bonded by adhesive. For example, the components of cylinder **256** may be made of stainless steel, except piston **256***c* which may be made of rubber.

[**0150**] To steer the sew tip, an operator of the suturing instrument **16** turns the thumb wheel **248** changing the volume of fluid **245** in chamber **240**, and moving the fluid into or out of outlet **248** and tube **250**. In response, the volume of fluid **245** in chamber **256***c* of cylinder **256** changes, and piston **256***c* and rod **258** moves in cylinder **238** causing the rod to extend or retract to flex tissue engaging end **16***a*, via flexure coupler **260**. For purposes of illustration, arrows **239** indicate flexure of the tissue engaging end **16***a* of instrument **16**. Fluid **245** may be, for example, water. This provide for a hydraulic steering mechanic which an operator of the instrument **16** can use to provide additional control in positioning the tissue engaging end during suturing, such positioning being independent of other steerability of the tissue engaging as may be provided by flexure of gastroscope's shaft **14***b*.

[**0151**] Alternatively, cylinder **256** may be replaced by a folding piston **262**, as shown in **FIG. 42B** and in more detail in **FIG. 42C**. Folding piston **262** has walls defining a cavity **262***a* which can longitudinally expand or contract due to changes in volume **263** of liquid **245** contained in the cavity from movement of the fluid through an opening **262***b* in one of the walls to which tube **250** is connected, such as by adhesive bonding. Rod **258** is attached to end **262***d* of folding piston **262**, by adhesive bonding or is molded to end **262***d*. Folding piston **262** may be made of plastic, stainless steel, or of heat shrink tubing.

[**0152**] Folding piston **262** can be manufactured with a process using thin walled transparent or white heat shrink plastic tube **270** made from a non-elastic plastic, like polyester. **FIG. 45A** shows dark, light absorbing, lines **271** printed directly onto the tube **270** when it is collapsed flat. **FIG. 45B** shows the same tube **270** having plugs **273** with openings **262***b* into the tube, and pressurized with a medium (not shown) , such as water or air, through conduits to one or both openings **262***b*. Water is a preferred pressurized medium, because it also acts as heat sink to ensure localized heating of the tube only at the desired, printed sites. An appropriate fluence of light, such as produced by a laser, for a specific duration to generate heat along such dark lines of the tube **270** provides controlled radial and axial shrinkage of the tube (**FIG. 45C**). Such changes to the tube shape permits longitudinal folding of tube **270**, as indicated by arrow **272** (**FIG. 45D**). When the intraluminal pressure and volume are decreased and direct outside pressure is applied to either or both ends of the tube **270**, such as via opening **262***b*, the tube can collapse in length by folding in near the heat shrunk zones **274**, and thus provide folding piston **262**. By increasing pressure and volume within folding piston **262**, the folded zones **274** will reexpand longitudinally to re-establish the length of the folding piston **262**. By con-

trolling volume and pressure within the folding piston **262**, piston length is readily altered. Alternatively, light activated thermal modification of heat shrink tubing can be achieved by using a well controlled circumferential application of focused light, such as laser light, or by careful masking of the heat shrink tubing, or by placing a compliant marked mandrel or tube within a clear heat shrink tube and exposing to appropriate lighting conditions.

[**0153**] In a further alternative, a wire **263** may replace tube **250**, such that a mechanical steering mechanism is provided. As shown in **FIG. 44**, wire **263** follows the same path as tube **250**, except that a piston in no longer required in cylinder **238**. Instead, the wire **263** is coupled in cylinder **238** to shaft **244***a* to a ball **265**, which is retained in a socket **267** formed at the end of the shaft **244***a*. A cap **269** has a hole for wire **263** and is received and attached to the socket, such as by welding or brazing, to retain the ball onto the socket, but enable rotation of the ball so that the rotation of the shaft **244***a* is not transferred to the wire **264**. The wire passes through a tube **266**, such as made of stainless steel extending between outlet **248** and opening **252** of the rigid tube **52** (**FIG. 44**). Tube **266** is attached to opening **252**, such as by welding or brazing. The wire passes along one of tracks **53***d* of guide member **53** extending with the guide member through rigid tube **52**, and then through hole **254** of coupler member **56** through its tab **56***a* and **56***d*, along one of tracks **58***d* of guide member **58** to the sew tip **98** (**FIG. 44A**). Wire **262** is attached to a hole **268** extending into tab **100** of the sew tip **98**, such as by welding or brazing.

[**0154**] From the foregoing description, it will be apparent that there has been provided an improved system and method for endoscopic suturing. Variations and modifications in the herein described system and method in accordance with the invention will undoubtedly suggest themselves to those skilled in the art. For example, the entire shaft **16***b* or **134** of instruments **16** or **130**, respectively, maybe flexible along their length. Accordingly, the foregoing description should be taken as illustrative and not in a limiting sense.

1-32. (canceled)

33. A method for suturing tissue comprising the steps of:

providing an endoscope having a flexible shaft and an accessory tube coupled externally to said shaft which flexes in accordance with flexing of said shaft;

locating an endoscope with said coupled accessory tube in the body of a patient; and

inserting a suturing instrument through said accessory tube into the body of the patient to place two ends of a loop of suture through tissue.

34. The method according to claim 33 wherein said inserting step further comprises the steps of:

providing a shaft for said suturing instrument and a distal tissue engaging end coupled to said shaft of said suturing instrument having a sew tip with a gap; and

applying suction along said shaft to said gap of said sew tip to enable tissue to be pulled into said gap when each end of said loop of suture is place in tissue.

35. An attachment for a flexible endoscope having a shaft extending to a distal end comprising:

a flexible tube capable of being coupled externally to said endoscope to be flexible with flexing of said shaft of said endoscope; and

said tube having a distal end attached to said shaft of said endoscope.

36. The attachment according to claim 35 wherein said proximal end of said tube has a sealable opening which opens to allow an instrument to pass into said tube and closes when the instrument is removed from the tube.

37. The attachment according to claim 35 further comprising:

a plurality of guides each attached at a location along said shaft of said endoscope and having an opening through which said tube extends in which said tube is capable of sliding through said opening in response to flexing of said shaft of said endoscope.

38. The attachment according to claim 36 wherein said sealable opening is provided by a cannula attached to said tube having a sealable passage in communication with said tube.

39. The attachment according to claim 35 wherein said tube represents a conduit enabling enables access of an instrument independent of said endoscope near said distal end of the shaft of the endoscope.

40. A suturing instrument comprising:

a housing;

a shaft extending from said housing;

a tissue engaging end coupled to said shaft at the distal end of the instrument;

one or more needles which extend through said housing through said shaft to said tissue engaging end;

a suture channel extending through said housing and said shaft to said tissue engaging end;

said tissue engaging end having a sew tip with an opening through which said needles are extendable to each capture one end of suture extending through said suture channel to said sew tip; and

said shaft having a first section and a second section, said first section being rigid and extends from said housing, and said second section being flexible and extends from the first section to the tissue engaging end of said suturing instrument.

41. The suturing instrument of claim 40 wherein said opening of said sew tip represents a first opening and said suture channel having first and second ends in which said first end is adjacent said sew tip, and said suturing instrument further comprises:

a sleeve over said sew tip having one end capped and an second opening in communication with said first opening of said sew tip;

means for selectably providing suction to said suture channel along said shaft to said first opening of said sew tip to enable tissue to be pulled into said first opening through said second opening of said sleeve when said needle extends through said opening of said sew tip in which said capped sleeve enables suction to be communicated to said distal end of the instrument; and

means for selectably closing said second end of said suture channel to enable suction to be provided at said sew tip by said suction providing means.

42. The suturing instrument of claim 40 wherein said needle comprises first and second members and a spring which couples said first and second members, and said second member has a tip positionable in said sew tip.

43. A suture securing instrument comprising:

a shaft which is at least partially flexible;

a distal tissue end coupled to said shaft;

means for retaining in a sleeve member at said distal end two free ends of a loop of suture extending through tissue; and

means for cutting the two free ends of the loop of suture near said sleeve member.

44. (canceled)

45. The attachment according to claim 35 further comprising:

one or more first members through which said tube is slidable and said first members are attachable at locations along said shaft of said endoscope; and

a second member attached to said distal end of said tube in which said second member is attachable to the distal end of the shaft of the endoscope, in which said tube operates as a conduit for passage or one or more instruments along outside said shaft of said endoscope.

46. An apparatus for use with an endoscope having a flexible shaft with a distal end comprising:

a flexible tube having a distal end;

a member attachable to said distal end of the shaft of the endoscope and to said distal end of said tube; and

means for enabling the shaft of the endoscope and said tube to slide with respect to each other in response to flexing of said shaft of said endoscope, in which said tube operates as a conduit for passage of one or more instruments.

47. The apparatus according to claim 46 wherein said means maintains said tube substantially coaxial with the shaft of the endoscope.

48. A suturing instrument comprising:

a shaft;

a tissue engaging end coupled to said shaft at the distal end of the instrument;

one or more needles which extend through said shaft to said tissue engaging end;

means for carrying suture along said shaft to said tissue engaging end;

said tissue engaging end having an opening to a cavity through which said needles are extendable to each capture one end of the suture; and

means for applying suction along said shaft to said cavity of said tissue engaging end to enable tissue to be pulled into said opening when said needles are extended, wherein said shaft is not part of an endoscope.

49. The suturing instrument of claim 48 wherein each of said needles comprises first and second members and a spring which couples said first and second members to aid in flexibility of said needles.

50. The suturing instrument of claim 48 wherein:

said shaft has a first section and a second section;

said tissue engaging end is coupled to said second section of said shaft;

said one or more needles extend through said first and second sections of said shaft to said tissue engaging end;

said suture carrying means comprises a suture channel extending through said first and second sections of said shaft to said tissue engaging end;

said first section has an outer tube and a first guide member extending in said outer tube having a plurality of tracks for said needles and suture;

said second section of said shaft has a second guide member having a plurality of tracks for said needles and suture; and

said shaft has an outer layer extending over at least said second guide member to said tissue engaging end, and a coupler member coupling said first guide member to said second guide member to enable rotation to be translated from said first section to said tissue engaging end through said second section.

51. The suturing instrument of claim 48 further comprising means for steering said shaft.

52. The suturing instrument of claim 51 wherein said steering means comprises:

a chamber at or near the proximal end of said instrument having a fluid and a piston in said chamber movable to change the volume of the fluid in said chamber, an opening to said chamber, and a tube coupled to said opening extending along said shaft to said distal end; and

a cylinder along said shaft having a piston coupled to said distal end movable responsive to changes in said volume of fluid in said chamber communicated through said tube to said cylinder to steer said distal end.

53. The suturing instrument of claim 51 wherein said steering means comprises:

a chamber at or near the proximal end of said instrument having a medium and a piston in said chamber movable to change the volume of said medium in said chamber, an opening in said chamber, and a tube coupled to said opening extending along said shaft to said distal end; and

a folding piston coupled to said distal end expandable and retractable responsive to changes in said volume of said medium in said chamber communicated through said tube to said cylinder to steer said distal end.

* * * * *