April 22, 1930. G. J. J. CLARK ET AL 1,755,389

AERIAL FLARE

Filed Dec. 5, 1928 2 Sheets-Sheet 1

Fig. 1.

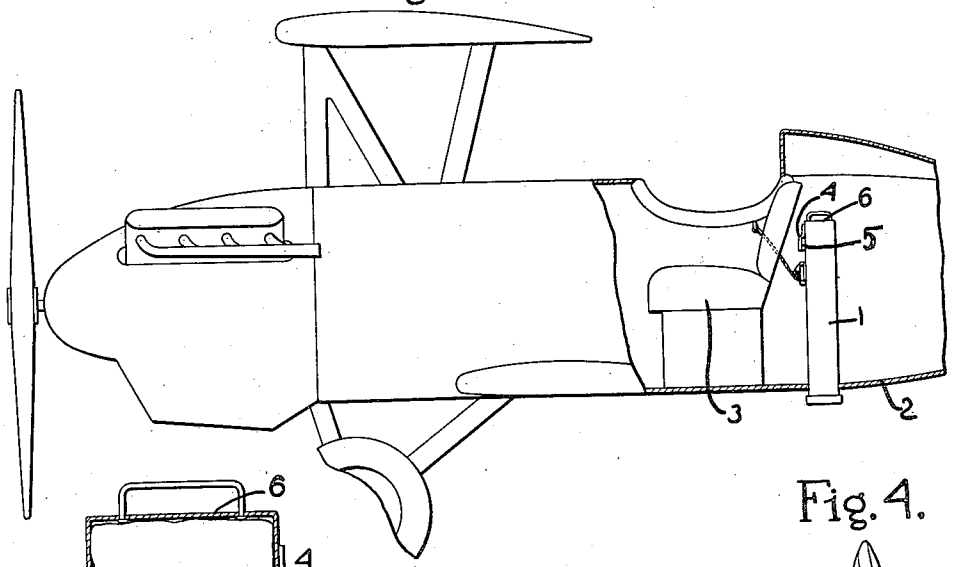

Fig. 2.

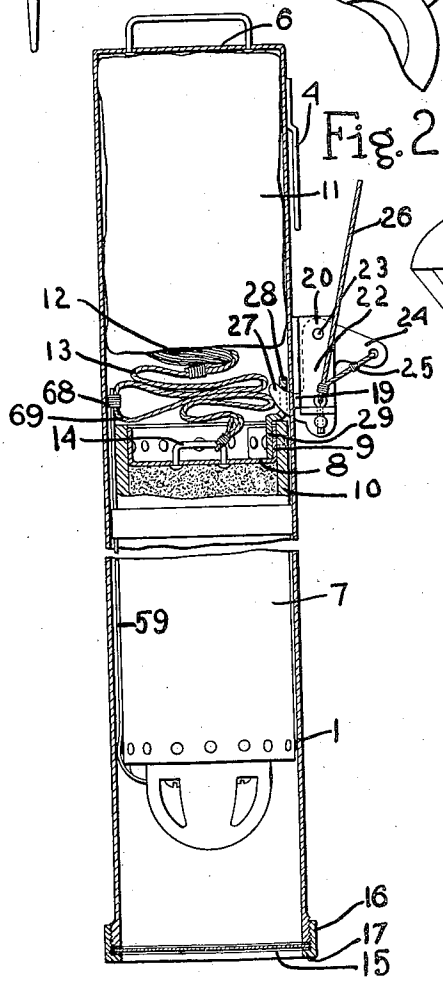

Fig. 3.

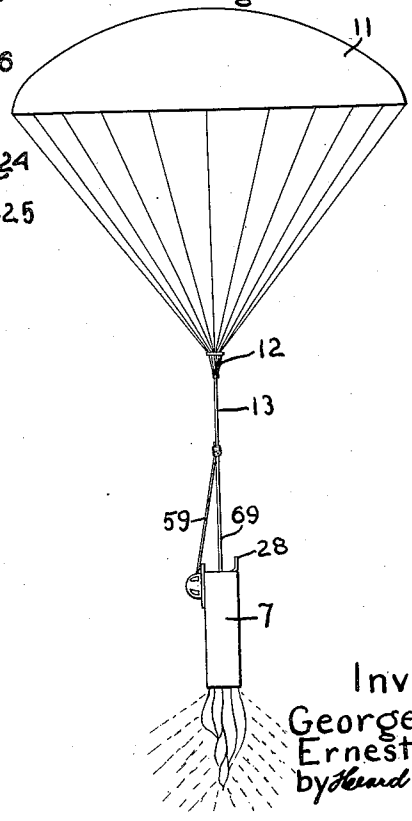

Fig. 4.

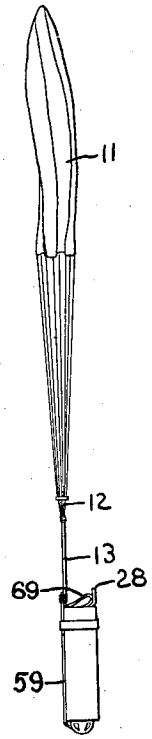

Inventors
George J. J. Clark
Ernest B. Jones
by Heard Smith & Tennant.
Attys.

April 22, 1930. G. J. J. CLARK ET AL 1,755,389

AERIAL FLARE

Filed Dec. 5, 1925 2 Sheets-Sheet 2

Fig.5.

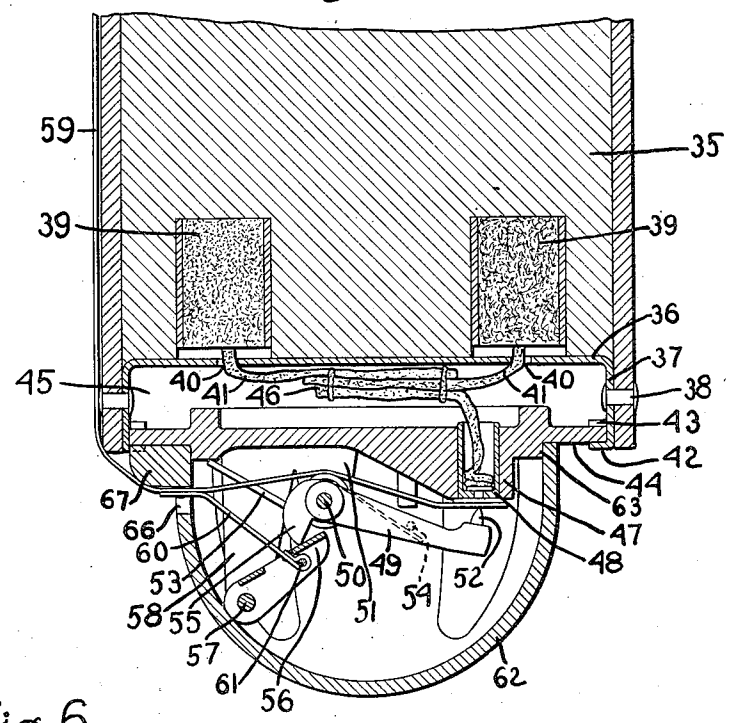

Fig.6.

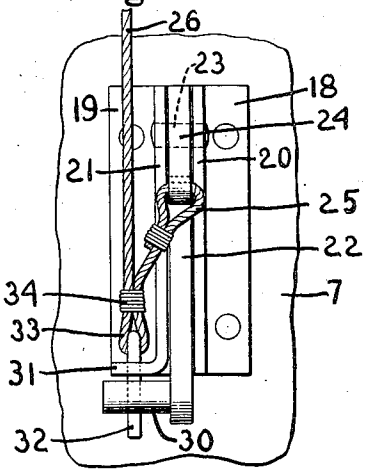

Fig. 7.

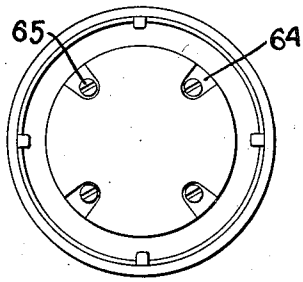

Inventors
George J.J. Clark
Ernest B. Jones
by Hecard Smith & Tennant.
Attys.

Patented Apr. 22, 1930 1,755,389

UNITED STATES PATENT OFFICE

GEORGE J. J. CLARK, OF WHITMAN, AND ERNEST B. JONES, OF SOUTH WEYMOUTH, MASSACHUSETTS, ASSIGNORS TO NATIONAL FIREWORKS, INC., OF WEST HANOVER, MASSACHUSETTS, A CORPORATION OF MASSACHUSETTS

AERIAL FLARE

Application filed December 5, 1928. Serial No. 323,859.

This invention relates to improvements in aerial flares and means for supporting the same within or upon the body of an air-ship.

Aerial flares for use in aviation are ordinarily carried in a supporting tube with detachable means for releasing the flare. In certain cases such detachable means are provided to effect engagement between the wall of the tube and the flare while in other instances the tube is supported upon a gate located at the lower end of the flare-containing tube. In either case condensation of moisture and freezing thereof when the air-ship ascends to a high altitude is likely to render the releasing mechanism inoperative and prevent the dropping of the flares. This is obviously a very serious defect as it is desirable to release the flare instantly when the air-ship passes over the desired landing field to enable the field properly to be illuminated for the landing of the air-ship.

One of the objects of the invention is to provide means for supporting the flare which will avoid the likelihood of such interference with the operation of the releasing mechanism.

Another object of the invention is to provide means by which the flare can be supported within the body of the air-ship, such means preferably being of a conveniently detachable character.

A further object of the invention is to provide a novel safety locking device for preventing premature release of the flare and which will make it safe for transportation and handling.

A further object of the invention is to provide novel and more effective means for insuring proper ignition or lighting of the light-producing composition of the flare.

These and other objects and features of the invention will more fully appear from the following description and the accompanying drawings and will be particularly pointed out in the claims.

A preferred embodiment of the invention is illustrated in the accompanying drawings as mounted in an air-ship of the heavier than air type, such as a monoplane. It will, however, be understood that the invention may be utilized in any form of air-ship.

In the drawings:

Fig. 1 is a view, partly in elevation and partly in vertical section, showing the flare-supporting tube detachably mounted within the body or fuselage of an air-ship;

Fig. 2 is a view mainly in vertical longitudinal section of the flare-supporting tube and the flare therein contained, also illustrating the releasable mechanism which supports the flare within the tube in locked position;

Fig. 3 is a view of the flare supported by an open parachute during the burning of the flare;

Fig. 4 is a view illustrating the flare and parachute immediately after their release from the supporting tube in the position in which the igniting mechanism will be actuated and the cap removed from the flare by the jerk produced when the parachute opens;

Fig. 5 is an enlarged detail view, mainly in vertical section, of the end of the flare, the cap and the igniting mechanism;

Fig. 6 is an enlarged detail view of the safety locking mechanism for preventing improper release of the flare from the tube; and,

Fig. 7 is a plan view upon a smaller scale of the end of the flare illustrated in Fig. 5 when viewed from beneath.

The particular embodiment of the invention is shown herein as an improvement upon the construction illustrated in the application of George J. J. Clark and Ernest B. Jones, Serial Number 213,676, filed August 17, 1927.

The flare-supporting tube 1 is mounted preferably in a vertical position within the body or fuselage 2 of the air-ship and behind and in proximity to the pilot seat 3, although it may be mounted in any desired position within the body or any other portion of the air-ship which will serve to protect the releasing mechanism from the weather.

Desirably the flare-supporting tube is detachably mounted within the body of the air-ship in such a manner that it can be readily removed and replaced if desired. This is accomplished in the present embodiment of the

invention by providing the tube 1 with a bracket 4 which is adapted to extend over and embrace a transverse bar or girder 5 extending across the body of the air-ship, or which may project from a suitable stand within the air-ship.

The tube 1 desirably has a closed upper end 6 which may be made integral with the body of the tube, while the lower end of the tube is open and exposed through the body of the air-ship. As illustrated, the lower end extends a short distance below the air-ship and desirably is hermetically sealed by means which will be removed by the flare when it is released.

The flare is releasably supported in the tube and comprises a shell 7 containing a light-producing composition, such as a magnesium composition, and has at its upper end a preferably sheet metal base 8 which may be in the form of a plate having a peripheral flange 9 secured to the wall 10 of the shell by rivets, or other suitable means. A parachute 11, having cords 12, is connected by a wire cable 13 to a suitable yoke or ring 14 upon the base. The shell, parachute and the supporting cords intermediate thereof are supported within the tube in such a position that the shell desirably is at a distance from the lower end of the tube with the parachute contained in the chamber at the closed end of the tube.

The lower end of the tube 1 is closed preferably hermetically by means which will permit the escape of the flare when released from the tube without substantially interfering with its momentum. Any suitable means may be provided for accomplishing this purpose. A preferred construction which is illustrated herein comprises a disk or plate 15 of celluloid, or some other frangible or easily breakable material, which will not be likely to tear the parachute as it passes therethrough, and which will not materially interfere with the momentum of the dropping flare when released.

Any suitable means may be provided for securing the plate 15 at the lower end of the tube. As illustrated herein it is held against the end of the tube by a ring 16 having internal screw threads engaging complementary peripheral screw threads upon the end portion of the tube 1 and has a flange 17 underlying and clamping the edge of the plate against the lower end of the tube. By reason of this construction the heavy shell of the flare when released will readily break out the frangible plate 15 by its weight and the momentum which it acquires in traversing the lower end portion of the tube after it is released.

Another object of the invention is to provide novel means for releasably locking the flare within the tube and comprises generally a latch having a member extending through the tube and engaging a recess in the base of the shell or a bracket secured thereto. In the construction shown a bracket is mounted upon the outside of the tube and has pivotally mounted upon it a bell crank lever, one of the arms of which has a hook-shaped end extending through a slot in the tube and engaging a recess in the base of the tube or a bracket secured thereto. The bracket, which is mounted upon the outside of the tube, comprises a pair of plates 18 and 19 extending longitudinally of the tube and having parallel flanges 20 and 21 which extend outwardly from the plates 18 and 19.

The bell crank lever comprises an arm 22, which lies between the flanges 20 and 21 and is pivotally secured thereto by a pin 23 which extends through the flanges 20 and 21 and the arm 22, and a laterally extending arm 24 the end of which is secured to a branch 25 of a releasing cord 26. The lower end of the arm 22 of the bell crank lever is provided with a lateral extension 27 which normally extends through a slot in the shell of the tube 1 and engages a slot in a bracket or plate 28, the lower offset end 29 of which is riveted or otherwise secured to the flange 9 of the base of the shell.

Safety means are provided for locking the releasing mechanism in engagement during transportation of the tube which can be readily unlocked when the releasing cord is pulled to drop the flare. In the preferred construction illustrated the end portion of the arm 22 of the bell crank lever is provided with a laterally extending stud 30 which lies beneath a lateral extension 31 at the lower end of the flange 21. A pin 32, such as a cotter pin, extends through an aperture in the flange 31 and a suitable hole in the stud 30. The eye of the pin 32 is engaged by a loop 33 in the releasing cord 26, the releasing cord desirably being bound by a winding of wire 34, or otherwise, to provide the branch 25 leading to the end of the bell crank arm 24.

When it is desired to release the shell a quick pull upon the releasing cord will first withdraw the pin 32 from locking engagement with the flange 31 and stud 30 of the bell crank lever, so that further pull upon the releasing cord will act directly upon the arm 24 of the bell crank lever and withdraw the hooked end 27 of the arm 22 from engagement with the plate or bracket 28. The shell of the flare with the parachute attached thereto will thereupon immediately drop and breaking through the frangible closure 15 at the lower end of the tube will escape freely into the air.

A further object of the invention is the provision of novel means for insuring ignition of the flare when the shell is arrested by the expansion of the parachute during its descent.

This improved construction is illustrated

mainly in Fig. 5. As illustrated therein the flame-producing composition 35 is retained within the shell by a preferably metal plate 36 having a downwardly extending annular flange 37 which is secured to the wall of the shell by rivets 38. The end portion of the composition 35 is provided with preferably a plurality of chambers 39 which are filled with a more sensitive and quicker burning composition than that of the composition 35 of the flare. The plate 36 is provided with suitable apertures 40 through which branches of a quick-burning match 41 are carried into the chambers containing the highly sensitive flammable material 39.

The lower end of the shell desirably is covered by a cap which may be similar to that illustrated in the prior application of Clark and Jones above identified. This cap, however, is secured upon the end of the shell in the present invention in a different manner. As illustrated in Fig. 5, the peripheral flange 37 of the plate 36 is provided with laterally bent lugs 42 and 43 engaging the upper and under faces of the base plate 44 of the cap. These lugs hold the base plate of the cap at a sufficient distance from the plate 40 to provide a chamber 45 to contain a quick-match 46 of any suitable length, with its branches 41 leading through the apertures 40 to the chambers 39 containing the more active ignitable material.

The cap desirably is made of aluminum, or other suitable material, and is provided with a boss 47 having a cylindrical aperture forming a cartridge chamber in which a blank cartridge 48 may be placed. The end of the quick-match 41 desirably extends into or in proximity to the open end of the cartridge. The igniting mechanism is of a safety type comprising a hammer 49 which is pivotally mounted upon a stud 50 extending between a pair of bosses 51 which project from the base 44 and has a head provided with a sharp projection or firing pin 52 adapted to engage the cartridge. A spring 53, having one end engaging the base 44 of the cap, is spirally coiled around the stud 50 and bears at its opposite end upon a stud 54 projecting from the side of the hammer.

The spring 53 normally serves to hold the hammer in engagement with the cartridge with the spring extended and is adapted to be raised against the tension of the spring so that when released it is caused by the spring to impinge upon the cartridge and fire the same.

Any suitable means may be provided for thus actuating the hammer. In the particular construction illustrated the hammer is provided with an extension 55 presenting a shoulder which is engaged by a trigger 56 which is pivotally mounted upon a stud 57 carried by a pair of bosses 58 projecting from the base 44 of the cap. A lanyard 59, having a branch 60 which is connected to a stud 61 on the trigger near its free end, serves when pulled to cause the trigger to act upon the extension 55 of the hammer, and thereby raise the hammer against the action of the spring and upon further movement to slip over the shoulder of the hammer, thereby releasing the hammer, so that it is impelled by its spring against the cartridge, thereby firing the latter.

The ignition mechanism also comprises a safety device to prevent accidental firing of the cartridge. In the preferred construction the lanyard is in the form of a steel strap or band which, when in normal position, extends beneath the pivotal support for the hammer and over the head of the cartridge, thereby being interposed between the cartridge and the firing pin 55 of the hammer.

The branch 60 of the lanyard, which is connected to the trigger, is of such length that when the trigger is pulled sufficiently to release the hammer, the end of the lanyard 59 will have been withdrawn from the path of the head of the hammer so that the firing pin 52 thereof will engage and fire the cartridge.

The firing mechanism thus described is enclosed in a suitable, preferably dome-shaped, cover 62 which fits the shoulder of a rib 63 on the base 44. The cover is provided with indentations 64 the bases of which overlie the rib 63 and screws 65, extending through the bases of the indentations into the rib 63, serve to hold the cover firmly clamped upon the base. The lanyard 59 and its branch 60 extend through an aperture 66 in the cover and desirably the cover is provided with a rounded boss 67 which forms a guide for the lanyard to prevent abrupt bending thereof.

The lanyard 59 extends along the side of the shell and is connected at its upper end to the cable 13 by which the parachute is connected to the shell. Desirably the cable 13 is of wire and the lanyard is connected to it by a series of wire windings 68 which also preferably are soldered or brazed to the cable and to the lanyard.

The length of the lanyard is shorter than the length of the portion 69 of the cable between the eye 14 on the base of the shell and the union 68 between the lanyard and cable so that when the shell is dropped and the cable tightened by the opening of the parachute, the lanyard will be pulled sharply and will first actuate the trigger to raise and release the hammer, thereby firing the cartridge and igniting the quick-match which in turn will unite the sensitive burning composition in the chambers 39 and thereby ignite the active light-producing composition 35 of the shell. Further movement of the lanyard will strip the cap from the end of the shell by bending outwardly the lugs 42 on the flange

37 of the plate 36, thereby removing the cap from the end of the shell and permitting the shell to drop to the vertical position illustrated in Fig. 3, with the bright flame issuing from the lower end thereof. The parachute will, of course, sustain the shell in such a manner that it will slowly descend giving ample time for the operator of the aeroplane to circle and select the portion of the landing field which is best adapted for the landing of the plane.

It will be obvious from the above description that the present invention provides means for protecting the flare from becoming ice-bound, and for properly and instantly releasing the flare when needed, and that improper actuation of the releasing mechanism is prevented by the device which locks the latch against removal until pulled out by the releasing cord.

Furthermore, the firing mechanism is such that the hammer mechanism is not under tension, but is placed under tension and released only when the lanyard is pulled first to remove the safety device which is interposed between the hammer and cartridge and then to raise and release the hammer. In this construction the cap is fully removed from the end of the flare instantly after the ignition takes place, so that instantly the light in its full brilliancy floods the landing field, thereby providing a great advantage over usual types of flares in which a cap remains upon the end of the flare until burned away by the combustible material of the flare.

It will be understood that the particular embodiment of the invention disclosed herein is of an illustrative character and is not restrictive and that various changes in form, construction and arrangement of parts may be made within the spirit and scope of the following claims.

Having thus described the invention, what is claimed as new, and desired to be secured by Letters Patent, is:

1. An aerial flare construction for air-ships comprising a flare-supporting tube, means for supporting said tube within the body of the air-ship with the lower open end thereof exposed therethrough, a flare within said tube, releasable locking means for supporting said flare, and means substantially hermetically closing the lower end of said tube capable of removal by said flare upon its release without substantially obstructing the dropping of the flare.

2. An aerial flare construction for air-ships comprising a flare-supporting tube having a closed upper end and having means for supporting said flare within the body of said air-ship, a flare slidably mounted within said tube, releasable locking means for supporting said flare at a distance from the lower end of said tube, and frangible means closing the lower end of said tube breakable by the impact of said flare when released to permit the discharge of the flare from the tube.

3. An aerial flare construction for air-ships comprising a flare-supporting tube having a closed upper end and having means for supporting said flare within the body of said air-ship, a flare slidably mounted within said tube, releasable locking means for supporting said flare at a distance from the lower end of said tube, a disk of frangible material closing the lower end of said tube, and a clamping ring screwed upon the end of said tube having a flange peripherally engaging said disk and securing the same upon the end of said tube.

4. An aerial flare construction for air-ships comprising a flare-supporting tube having a closed upper end and having means for suspending the flare upon the air-ship, a flare slidably mounted within said tube, releasable locking means for supporting said flare within said tube at a distance from the lower end thereof, and a disk of frangible material secured to the lower end of said tube and substantially hermetically closing the same and breakable by the impact of said flare when released to permit the discharge of the flare from the tube.

5. An aerial flare construction comprising a flare-supporting tube, a flare slidably mounted within said tube comprising a shell provided with a sheet metal base having a recess, a locking hook pivotally mounted upon said tube normally having its hooked end extending through a slot in the wall of said tube and engaging said recess, means for swinging said hook about its pivot to release the hooked end portion thereof from engagement with said recess and permit the flare to drop from the tube, and means normally retaining said hook in locking position, but detachable therefrom by the actuation of said hook-releasing means.

6. An aerial flare construction comprising a flare-supporting tube, a flare slidably mounted within said tube comprising a shell provided with a sheet metal base having a recess, a bracket mounted upon the outside of said tube having near its lower end a laterally extending flange provided with a pin-receiving hole, a bell crank lever pivotally mounted upon said bracket having one arm presenting a hooked end normally extending through a slot in the wall of said tube and engaging the recess in the base of said flare, a releasing cord connected to the other arm of said bell crank lever, a locking pin extending through the hole in the flange of said bracket engaging said hook and acting to prevent its withdrawal from flare-locking position, and a cord connected to said pin and to said releasing cord operable when the releasing cord is pulled to withdraw said pin and thereby permit continued pull upon said releasing cord to

withdraw said hook from engagement with said recess.

7. An aerial flare comprising a shell having a closed base and containing a homegeneous mass of light-producing pyrotechnical material, said mass being provided at the end remote from the base with a chamber containing a more sensitive ignitable firing material than that of said mass, a retaining plate secured within said shell engaging and covering the material therein and having an opening communicating with the chamber of said firing material, a cap detachably secured to the end of the shell containing a cartridge chamber, a quick-match extending from said cartridge chamber through said aperture to said firing material, means for firing said cartridge mounted upon said shell, a parachute having a supporting cable connected to the base of said shell, and means connecting said cable to said cartridge-firing means and operable by the more rapid movement of said shell than that of said parachute, when dropping, to discharge said cartridge.

8. An aerial flare comprising a shell having a closed base and containing a homogeneous mass of light-producing pyrotechnical material, said mass being provided at the end remote from the base with a chamber containing a more sensitive ignitable firing material than that of said mass, a retaining plate secured within said shell engaging and covering the material therein and having an opening communicating with the chamber of said firing material, a cap detachably secured to the end of the shell containing a cartridge chamber, a quick-match extending from said cartridge chamber through said aperture to said firing material, a spring-actuated hammer and trigger mounted upon said cap, a parachute having a supporting cable connected to the base of said shell, and means connecting said cable to said trigger operable by the more rapid movement of said shell than that of said parachute, when dropping, to raise and release said hammer to fire said cartridge and thereafter to remove said cap from said shell.

9. An aerial flare comprising a shell having a closed base and containing a homogeneous mass of light-producing pyrotechnical material, said mass being provided at the end remote from the base with a plurality of chambers containing a more sensitive ignitable firing material than that of said mass, a flanged sheet metal retaining plate secured within said shell casing having apertures communicating with said chamber and engaging the end of said mass, with said flange providing a fuse chamber in the end of said shell, a cap detachably secured to the end of said shell having a cartridge-containing chamber, a quick-match extending from said cartridge through said fuse chamber and apertures to the firing material, a parachute having a supporting cable connected with the base of said shell, and means operable by said cable by reason of the more rapid movement of the shell than that of the parachute, when dropping, to actuate said cartridge-firing mechanism.

10. An aerial flare comprising a shell having a closed base and containing a homogeneous mass of light-producing pyrotechnical material, said mass being provided at the remote end from the base with a chamber containing a more sensitive ignitable firing material than that of said mass, a flanged sheet metal retaining plate secured within said shell casing having an aperture communicating with said chamber and engaging the end of said mass, a cap for the end of said shell having a cartridge-containing chamber, a quick-match extending from said cartridge to the chamber containing the firing material, a spring actuated hammer mounted on said cap, a trigger operable to raise and release said hammer and thereby to fire the cartridge, lugs bent inwardly from said flange engaging the inner and outer faces of said cap, a parachute having a supporting cable connected to the base of said shell, and a lanyard connected to said cable and to said trigger operable by said cable by reason of the more rapid movement of the shell than that of the parachute when dropping to cause said trigger to raise and release said hammer and thereafter to detach the cap from the shell.

In testimony whereof, we have signed our names to this specification.

GEORGE J. J. CLARK.
ERNEST B. JONES.