A. B. Bean's Improvement in KNIFE SHARPENER.

71442

PATENTED
NOV 26 1867

Fig. 1.

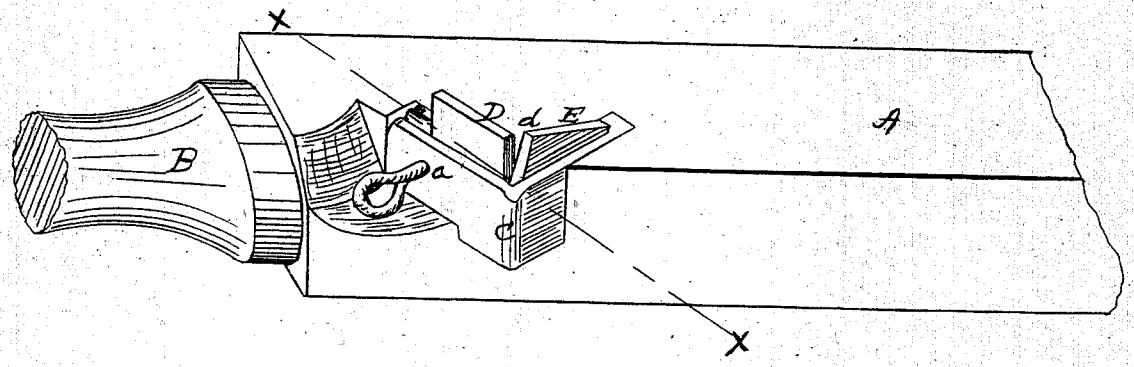

Fig. 2.

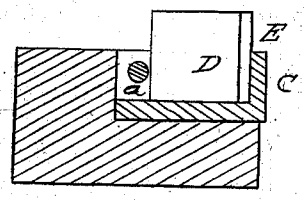

Fig. 3.

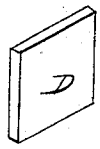

Fig. 4.

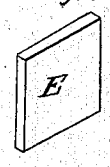

Witnesses.
John N. Shumway
A. J. Tibbits

A. B. Bean
Inventor
By his Attorney
Phin E Earle

United States Patent Office.

ALBERT B. BEAN, OF NEW HAVEN, CONNECTICUT, ASSIGNOR TO SAMUEL C. BRADLEY AND LEWIS W. UPHAM, OF THE SAME PLACE.

Letters Patent No. 71,442, *dated November* 26, 1867.

IMPROVEMENT IN KNIFE-SHARPENER.

The Schedule referred to in these Letters Patent and making part of the same.

TO ALL WHOM IT MAY CONCERN:

Be it known that I, ALBERT B. BEAN, of New Haven, in the county of New Haven, and State of Connecticut, have invented a new Improvement in Knife-Sharpener; and I do hereby declare the following, when taken in connection with the accompanying drawings, and the letters of reference marked thereon, to be a full, clear, and exact description of the same, and which said drawings constitute part of this specification, and represent, in—

Figure 1, a perspective view,

Figure 2 a section on line *x x*, and in

Figures 3 and 4 the sharpeners detached.

This invention relates to an improvement in the arrangement of cutters for sharpening knives, and consists in forming the cutters so that they may be changed to present new and fresh edges, combined with the peculiar manner of securing the cutters when so changed, and also in combination with a knife-sharpener with a hone or strap.

To enable others to construct and use my improvement, I will proceed to describe the same, as illustrated in the accompanying drawings.

A is the hone or strap, its surfaces provided with any material to aid in finishing the edge of the knife, and is formed with a handle, B, for convenience in use. Near the handle, upon one of its angles, is placed a right-angular slotted piece of metal, C, formed so as to receive in each of its slots a block, D E. These blocks are formed of an equal thickness, and square, so that they may be removed from the slot and replaced, presenting a new edge to the centre, until all the edges have each been presented, that is, making eight changes each, and they are set into their respective slots, as seen in fig. 1, so as to leave a converging open space between the two. the edges meeting at a short distance from the top, and the blocks are secured in the following manner:

The first block, E, is inserted, then the block D, so as to set against the block E, and held by a cam, *a*, as seen in fig. 2. The block D is bound hard against the block E, so as to hold them both firmly in their proper position. To remove either of the blocks, release the cam, and when the blocks are again replaced, return the cam as before. After having drawn the knife through the sharpener to reduce the edge, it is finished by drawing a few times over the strap.

Having thus fully described my invention, what I claim as new and useful, and desire to secure by Letters Patent, is—

The combination of the blocks E and D, of the form described, with their holder C, when secured therein so as to be adjustable to present new edges, substantially as and for the purpose specified.

ALBERT B. BEAN.

Witnesses:

JOHN H. SHUMWAY,

A. J. TIBBITS.