United States Patent [19]

Jackson

[11] **3,923,210**

[45] **Dec. 2, 1975**

[54] **AUTOMATIC DISCHARGE REGULATOR**

[75] Inventor: **Lawrence Donald Alexander Jackson,** Montreal, Canada

[73] Assignee: **Lawjack Equipment Limited,** Montreal, Canada

[22] Filed: **Feb. 21, 1974**

[21] Appl. No.: **444,508**

[30] **Foreign Application Priority Data**

Feb. 22, 1973 United Kingdom 8807/73

[52] **U.S. Cl.** **222/494;** 222/529

[51] **Int. Cl.**[2] **B65D 37/00**

[58] **Field of Search** 222/212, 491, 494, 107, 222/527, 529, 490, 213, 528

[56] **References Cited**

UNITED STATES PATENTS

1,964,860	7/1934	Rabe et al.	222/491 X
3,121,578	2/1964	Moses	222/494 X
3,330,448	7/1967	Murphy	222/529 X
3,610,477	10/1971	Herzig	222/213
3,815,794	6/1974	Carlisle	222/491

Primary Examiner—Stanley H. Tollberg
Attorney, Agent, or Firm—Larson, Taylor & Hinds

[57] **ABSTRACT**

An automatic discharge regulator is disclosed for a separator or classifier to regulate the discharge of solid particles conveyed in a slurry. Hydrocyclones are frequently used for separating solid particulate material from liquids, but if an open solid discharge exit is provided, the regulation of separation cannot be controlled unless there is a constant flow of solid material in the slurry. The regulator has two sheets of flexible material in side by side relationship held together at two opposing edges to form a sleeve. One end of the sleeve fits over the exit from the separator. The sleeve has reinforcing pads of flexible material which are positioned on the outside surfaces of the sheets of flexible material and keep the other end of the sleeve closed when no solid material passes therethrough. A method of regulating the discharge of solid materials from such a discharge sleeve attached to the exit spigot of a hydrocyclone is disclosed by controlling the vacuum in the hydrocyclone.

8 Claims, 4 Drawing Figures

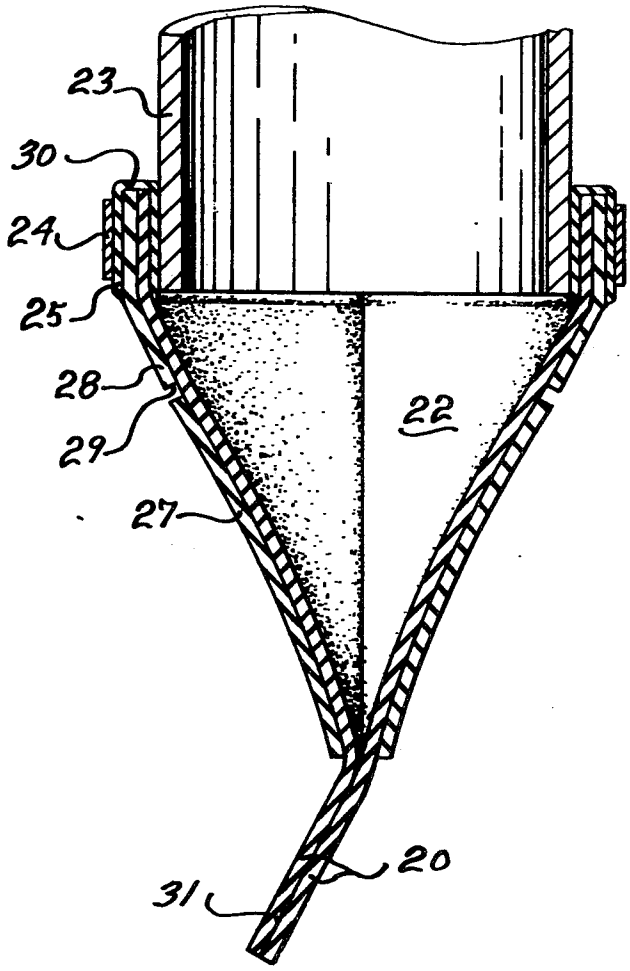

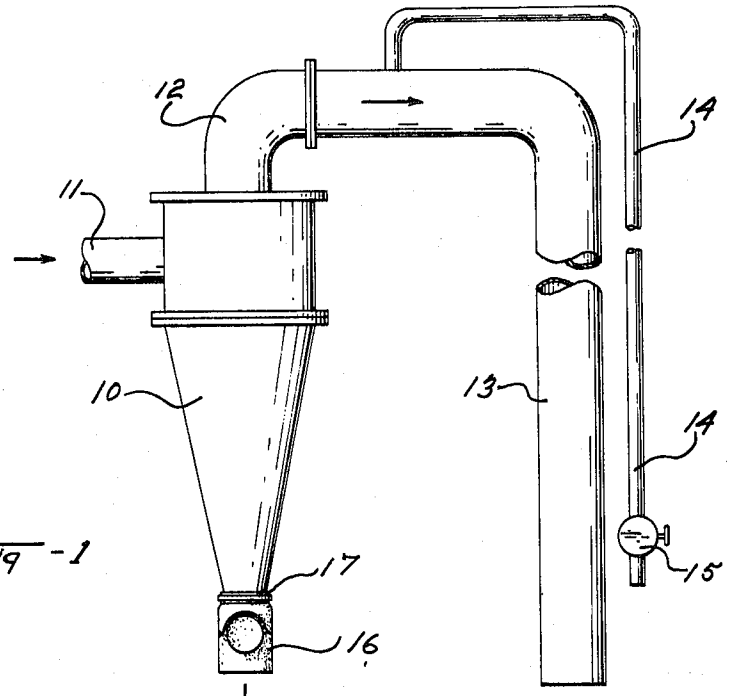

Fig - 1

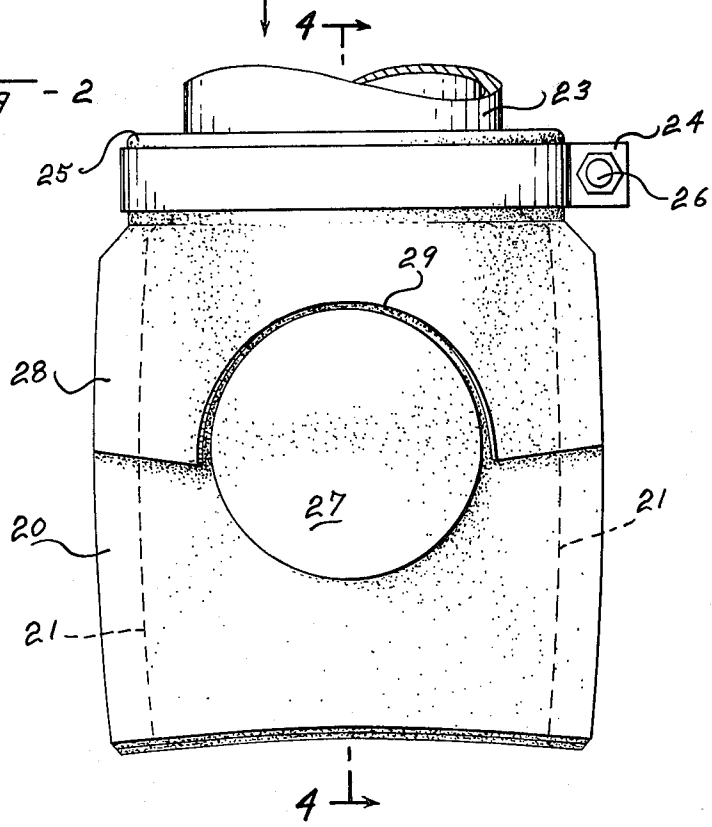

Fig - 2

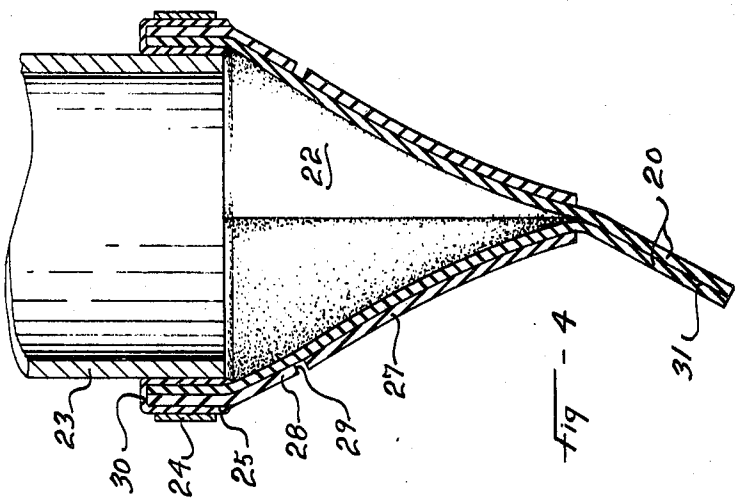

Fig - 4

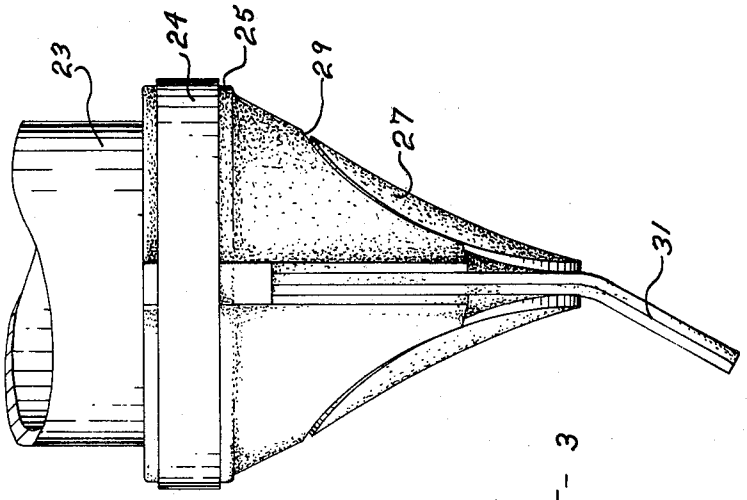

Fig - 3

AUTOMATIC DISCHARGE REGULATOR

This invention relates to hydrocyclone classifiers or centrifugal separators and more particularly to a device for controlling the density of discharging particulate material separated from a fluid in a classifier or separator.

Hydrocyclones are generally used for separating solids in the form of fine particulate material from liquids. They are primarily used in both the mining and aggregate industry. One use of a hydrocyclone is in systems where a pipe line is used for transporting solids in a liquid suspension. In this system, solids in the form of powder or fines such as sand, coal dust, clay, mineral ore, etc., are deposited into a pipe line having a liquid, usually water, flowing therein. The water acts as a carrier and conveys the solid particles along the pipe line. Provided velocity of the water in the pipe line is maintained above a minimum level, the particles do not settle and are kept in suspension throughout the length of the pipe. The hydrocyclone is generally a centrifugal unit. The liquid and solid particles enter the hydrocyclone tangentially and are subjected to a centrifugal force which forces the coarser and higher density material towards the outside wall of the hydrocyclone. The larger solid particles work their way to the apex of the hydrocyclone where they leave the hydrocyclone through an exit. The remaining water and other fine particles are removed through an overflow at the top centre of the unit.

In the metallurgical field, a hydrocyclone is used to classify fine particles according to their size and/or density. For instance a crushed ore is conveyed in water to a hydrocyclone where the heavy and/or coarse particles separated from the fine and/or light rock particles and water. The heavy and/or coarse particles are forced out to the wall of the classifier by centrifugal force, and these travel along the conical wall towards the apex where they are finally discharged through a spigot. The fine and/or light particles are removed with most of the water through an overflow in the centre of the hydrocyclone. The control of separation depends on the size of the hydrocyclone, the speed and quantity of the water entering the hydrocyclone inlet, and the amount of vacuum in the hydrocyclone. Such a system is used for dewatering sand and gravel conveyed in a water pipe line. A hydrocyclone is also used for classifying ground ores into products requiring further processing. Such a product is one requiring further grinding, and then processing through a hydrocyclone again. Another use of hydrocyclones is desliming or dewatering mineral wastes or tailings to improve consolidation properties. Another use of a hydrocyclone is for separating fine clay from concrete sand. In this latter process, the bulk of the water and the finer size clay particles flow to the overflow while the larger solid particles of sand with a reduced amount of water are forced to the wall of the hydrocyclone and then discharged through a spigot at the apex.

The control of a hydrocyclone depends on the size and proportion of the unit, the quantity of solids and liquid flowing into the unit, the ratio of water to solids and pressure of the fluid solids mixture entering the hydrocyclone inlet in the form of a slurry feed. The control is also effected by the size of the overflow and apex opening, and the amount of vacuum in the system. One of the common problems with the hydrocyclones of today, is to regulate the density of the discharge of solid materials. If there is always a constant flow of solid particles in the hydrocyclone feed, then the apex spigot may be adjusted to a particular size opening and the unit discharges a relatively constant output. However, in the majority of cases, the amount of solids in the slurry feed varies. The flow of liquid is usually constant, but batches of solid particles are deposited into the feed pipe line at frequent intervals. In this situation it is necessary to continually adjust the apex spigot, otherwise excess water tends to escape through the spigot producing a material which may be unsuitable for further processing.

It is an object of the present invention to provide a simple discharge regulator for automatically opening and releasing solid particles from a hydrocyclone, and closing when insufficient solid particles are present thus preventing liquid flushing out of the discharge regulator.

It is a further object of the present invention to provide a method of requlating the discharge through an apex spigot of a hydrocyclone so as to control the solids to liquid ratio.

With these and other objects in view, there is provided an automatic discharge regulator for a discharge exit from a separator or classifier comprising two sheets of flexible material in side by side relationship held together at two opposing edges forming a sleeve, a first end of the sleeve adapted to mate with the discharge exit, a reinforcing pad of flexible material positioned on the outer surface of each of the two sheets such that when the first end of the sleeve mates with the discharge exit, the second end of the sleeve remains closed with the two sheets touching, the flexible material having sufficient resilience to allow the second end of the sleeve to be opened and pass solid particles therethrough.

There is also provided in a method of regulating the discharge of solid materials from a separator through an exit including the steps of controlling the velocity and flow of solid particles conveyed in a fluid suspension to a separator, separating at least a portion of the solid particles from the fluid and removing the majority of the fluid and any particles left therein, the improvement comprising passing the portion of solid particles through a sleeve of resilient material attached to the exit, the resiliency of the sleeve forcing it closed when no solid particles pass therethrough, and varying the vacuum inside the separator to regulate the percent of solid particles separating from the fluid.

With the foregoing objects and features in view and such other objects and features as may become apparent as this specification proceeds, the invention will be understood from the following description of a preferred form thereof taken in conjunction with the accompanying drawings, which illustrate embodiments of the invention.

FIG. 1 shows a schematic diagram of a hydrocyclone with an automatic discharge regulator of the present invention.

FIG. 2 shows a side elevation of one type of an automatic discharge regulator according to the present invention, mounted on a discharge exit of a separator or classifier.

FIG. 3 shows an end view of the automatic discharge regulator shown in FIG. 2.

FIG. 4 shows a cross-section through the automatic discharge regulator shown in FIG. 2 at section 4—4.

Referring now to the drawings, in FIG. **1** an automatic discharge control system is shown with a hydrocyclone **10**, a tangential or sweep inlet **11** entering the hydrocyclone **10**, and an overflow pipe **12** leading through a flange connection to a siphon leg **13**. An air bleed hose **14** attached to the siphon leg **13** has a vacuum control valve **15** which is adjustable to allow bleed air into the siphon leg **13** so as to control the vacuum inside the hydrocyclone **10**, thereby controlling the opening and closing of an automatic discharge regulator **16** attached to the apex spigot **17** of the hydrocyclone **10**. The vacuum may also be controlled by varying the elevation of the end of the siphon leg **13**.

The regulator shown in FIGS. **2**, **3** and **4** comprises two flat rectangular sheets **20** of resilient material. This material is preferably synthetic or natural rubber and is abrasion resistant to stop wear from granular particles such as sand passing between the two sheets **20**. The material is sufficiently flexible to allow the two sheets **20** to open, but has a configuration which always returns the two sheets to their original flat shape thus closing the regulator. Two strips **21** down opposite edges of the sheets **20** are adhered together preferably by an adhesive or alternatively by clips or other means, thus forming a passageway **22** between the two sheets **20**. The regulator fits onto the round exit sleeve **23** at the exit of a separator or classifier such as a hydrocyclone similar to that shown in FIG. **1** and is attached by a circular clip **24** which surrounds a collar **25** of the regulator. The circular clip **24** has a nut and bolt **26** which permits its removal, thus permitting a new regulator to be fitted when necessary. The means by which the clip **24** is held around the collar **25** may be by screw clamps, spring clamps or other well known means. The enntrance to the passageway **22** between the sheets **20** is circular. However, the two sheets **20** come together into their flattened position below the exit **23** to form a seal. When no particulate material is passing through the exit sleeve **23**, the passageway **22** is closed.

The construction of the regulator is adapted to control the closure. On the sheets **20** are two circular pads **27** substantially in the center and on the outside surface of each sheet **20** made from the same material as the sheets **20** and firmly adhered to the outside surface of each sheet preferably by an adhesive. A reinforcing strip **28** extending half way down each sheet **20** is attached to the outside of the sheet preferably by an adhesive. The reinforcing strip **28** has a cut out **29** to allow the reinforcing pad **27** to be carefully placed in the centre of each sheet **20**. The reinforcing strip **28** and the sheet are attached together at their top end to form the collar **25**. The collar **25** comprises an additional strip **30** of resilient material similar to the material used for the sheet **20** surrounding the inside and outside of the regulator and extending across the top. This gives additional reinforcement to the regulator and also aids at the point where the sheets **20** join to form a protective collar and stop leakage of liquid or air therethrough.

As may be seen in FIGS. **3** and **4**, the reinforcing pads **27** which aid in returning the sheets **20** to their original flattened state also surprisingly cause the ends of the sheets **20** to curve away in a tail **31**. This configuration allows the two sheets to touch and seal more definitely.

In operation the mixture of liquid and solid particles enter the hydrocyclone **10** through the inlet **11** and primarily due to centrifugal force, the coarse particles separate and are forced to the conical walls of the hydrocyclone **10**. From this position the particles travel along the walls of the hydrocyclone **10** to the automatic discharge regulator **16** attached to the apex spigot **17**. The vacuum from the siphon leg **13** draws the majority of the liquid and any fine particles that remain therein to the overflow pipe **12**. The control is by means of the vacuum control valve **15** on the air bleed hose **14**. The remaining coarse solid particles travel to the regulator and because they are denser and heavier than the liquid, they force the two sheets **20** apart and pass through the passageway **22**. It has been found that with this type of regulator the liquid content of the apex discharge can be dependably regulated as desired. One means of controlling the ratio or mixture of solids and liquids flowing through this regulator is carried out by means of the vacuum control valve **15**. Thus if too much liquid is discharging through the regulator with the solid particles then the vacuum inside the hydrocyclone is increased by reducing the air bled into the siphon leg **13**. If too many coarse particles are discharging through the overflow pipe **12** then the vacuum is decreased by increasing the air bled into the siphon leg **13**. When the particles are no longer conveyed into the hydrocyclone **10** while the flow of liquid still continues, then the passageway **22** closes and the liquid discharges through the overflow pipe **12**.

In the case of hydrocyclone being utilized as a classifier, the proportion of solids discharging through the apex spigot may be regulated by a number of different ways. First of all there is a control on the percentage of solids that are conveyed by the liquid, secondly the volume of liquid entering the hydrocyclone may be controlled, thirdly the pressure, hence the velocity of liquid can also be controlled and fourthly the preferred form of control is the amount of vacuum in the system. Other possible variations include the inlet diameter together with the diameter of the overflow **12** and the apex spigot **17**. The solids can generally be classified as to size or density. However, when size is mentioned one must also be aware of the shape of the particles, for instance, flaky material with a large surface area tends to stay with the liquid and is more difficult to separate than coarse granular particles. The adjustment of the regulator is generally made on site, adjusting the vacuum flow and velocity of liquid entering the hydrocyclone such that there is barely any liquid discharging from the regulator when the unit is operating only on a liquid, then by slowly adding solid particles to the liquid entering the hydrocyclone and again further adjustment made to the vacuum so that a minimum of liquid discharges with the solid particles. If it is found that too many coarse particles are passing through the overflow pipe, then adjustment must be made again to achieve the maximum solid discharge through the regulator.

In one particular embodiment the automatic discharge regulator was made from a natural rubber material known as Linatex (registered trade mark). The two sheets **20** were each ⅛ inch thick and the two pads **27** were each ¼ inch thick. The width of the sheets **20** was 11⅝ inches and their length was 17 inches and a strong rubber adhesive was used on each strip **21** to join the two sheets **20** together and on each pad **27** to adhere it to the sheet **20**. These pads **27** were each 8 inches in diameter. Reinforcing strips **28** and a collar were added to the automatic discharge regulator and the unit was attached to the apex spigot of the hydrocyclone. The hydrocyclone was first tested with only water fed into the unit, and the vacuum control adjusted such that no

water escaped through the automatic discharge regulator. Then as the sand and clay were added to the feedwater, it was found that the sand separated and discharged through the regulator whereas most of the clay and water discharged through the overflow.

It will be apparent to those skilled in the art that a number of variations may be made without departing from the scope of the present invention. For instance, the pads **27** need not necessarily be circular, they may be joined to the reinforcing strips **28**, alternatively they may be oval or diamond in shape and the sheets **20** need not necessarily be exactly rectangular. In some instances where it is necessary to separate different grades of ore from a liquid, then several classifiers may be used with the conditions inside the classifiers adjusted so that different size particles separate in different classifiers. The device may be constructed from plain sheets of flexible material such as rubber or may be specially moulded. The materials used for the regulator must be selected to suit the particular conditions including the ambient temperature and the type of material passing through the regulator.

The embodiments of the invention in which an exclusive property or privilege is claimed are defined as follows:

1. An automatic discharge regulator for a discharge exit from a separator or a classifier comprising a sleeve comprised of two sheets of resilient flexible material in side by side relationship, abutting one another at one end and adapted to sealingly mate with the discharge exit at the other end, said two sheets being sealingly held together along the length of the two opposing edges thereof, two reinforcing pads of flexible, elastic material, respectively, centrally located on and fixedly attached only to the outer surface of each of said two sheets so that each of said two sheets longitudinally extend in the direction of said one end beyond the corresponding said reinforcing pad, said reinforcing pads aiding in resiliently retaining said sheets at said one end in abutting relationship, thereby closing said one end of said sleeve when said regulator is in mating engagement with the discharge exit, the flexible material of said two sheets and of said reinforcing pads having sufficient resilience to allow said one end of said sleeve to be opened by and pass solid particles therethrough.

2. The automatic discharge regulator according to claim **1** wherein the sheets of flexible material are rectangular and the reinforcing pad on each sheet is circular.

3. In a method of regulating the discharge of solid materials from a separator through an exit including the steps of controlling the velocity and flow of solid particles conveyed in a fluid suspension to a separator, separating at least a portion of the solid particles from the fluid, and removing the majority of the fluid and any particles left therein, the improvement comprising passing the portion of solid particles through a sleeve of resilient material attached to the exit, the resiliency of the sleeve forcing it closed when no solid particles pass therethrough, and varying the vacuum inside the separator to regulate the percent of solid particles separating from the fluid.

4. A method of regulating the discharge of solid particles from a hydrocyclone comprising the steps of conveying a slurry of the solid particles in a liquid to the hydrocyclone, separating at least a portion of the solid particles from the liquid within the hydrocyclone, discharging the portion of the solid particles through a sleeve of resilient material attached to an exit spigot of the hydrocyclone, the resiliency of the material forming the sleeve closed when no solid particles pass therethrough, and varying the vacuum in the hydrocyclone to hold the sleeve closed when no solid particles pass therethrough and regulate the percent of solid particles separating from the liquid.

5. The method of regulating the discharge of solid particles from a hydrocyclone according to claim **4** wherein the vacuum in the hydrocyclone is regulated by varying air bled into a siphon leg from an overflow pipe of the hydrocyclone.

6. An automatic discharge regulator for a discharge exit from a separator or a classifier comprising a sleeve comprised of two sheets of resilient flexible material in side by side relationship, abutting one another at one end and adapted to sealingly mate with the discharge exit at the other end, said two sheets being sealingly held together along the length of the two opposing edges thereof, two reinforcing pads of flexible, elastic material, respectively, centrally located on and fixedly attached only to the outer surface of each of said two sheets, said reinforcing pads aiding in resiliently retaining said sheets at said one end in abutting relationship, thereby closing said one end of said sleeve when said regulator is in mating engagement with the discharge exit, the other end of the sleeve having a reinforced collar of flexible material, the flexible material of said two sheets and of said reinforcing pads having sufficient resilience to allow said one end of said sleeve to be opened by and pass solid particles therethrough; and

said regulator further comprising a reinforcing strip extending from said other end of said sleeve in outer coaxial abutting relationship with said two sheets and terminating at a location spaced from the closure of said one end.

7. The automatic dishcarge regulator of claim **6**, wherein said sheets are rectangular, said reinforcing pad on each sheet is circular, and said reinforcing strip partially surrounds, but is spaced from, said reinforcing pad.

8. The automatic discharge regulator of claim **6** wherein the two sheets of flexible material are resilient natural rubber and are held together at two opposing edges by rubber adhesive, and where the reinforcing pads are natural rubber and are positioned on the outside surface of the sheets by a rubber adhesive.

* * * * *