Aug. 10, 1965 H. A. GLIDEWELL 3,199,518

COLLAPSIBLE SHELTER FRAME

Filed Dec. 9, 1963 2 Sheets-Sheet 1

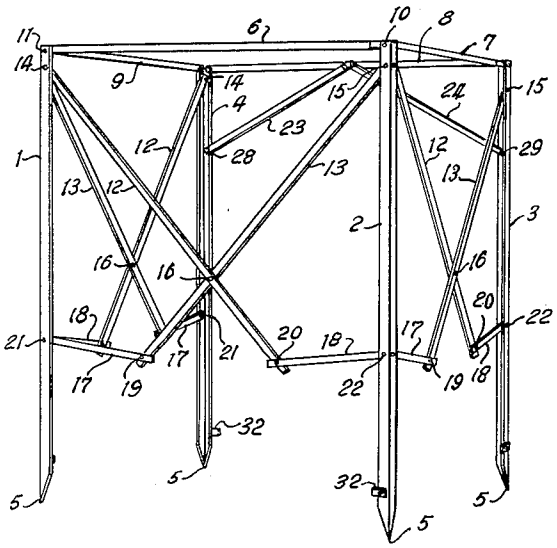

Fig. I

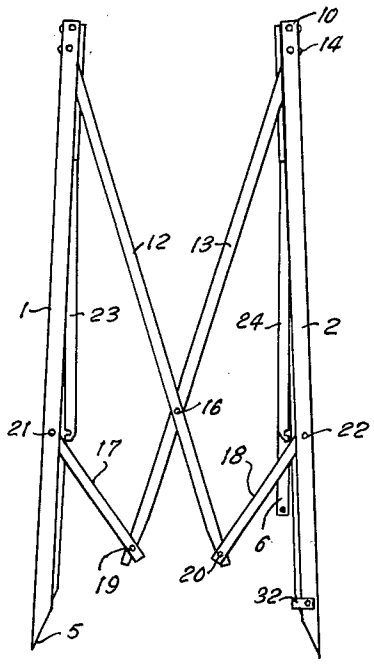

Fig. III

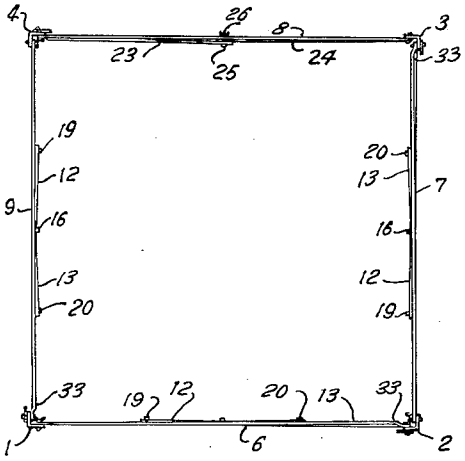

Fig. II

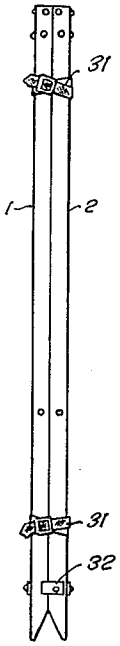

Fig. IV

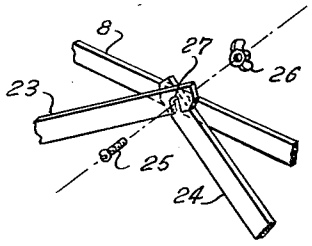

Fig. V

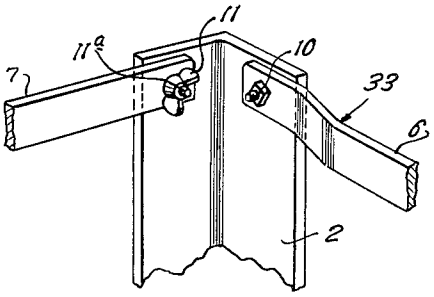

Fig. VI

INVENTOR

Herman A. Glidewell

BY Howard E. Moore

ATTORNEY

Aug. 10, 1965 H. A. GLIDEWELL 3,199,518

COLLAPSIBLE SHELTER FRAME

Filed Dec. 9, 1963 2 Sheets-Sheet 2

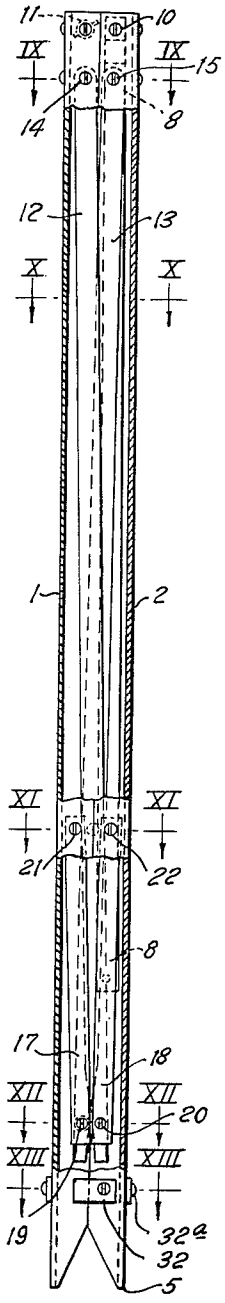

Fig. VII

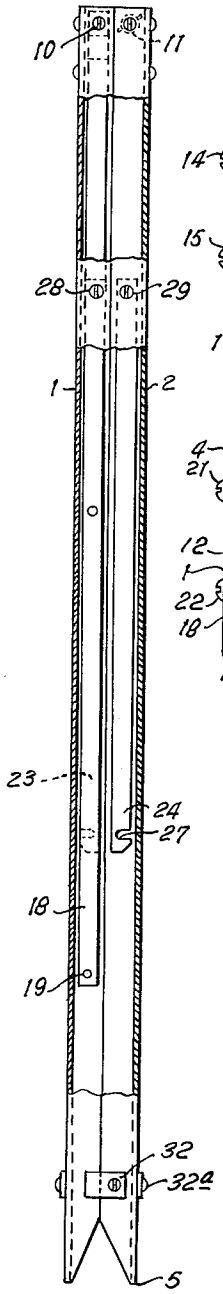

Fig. VIII

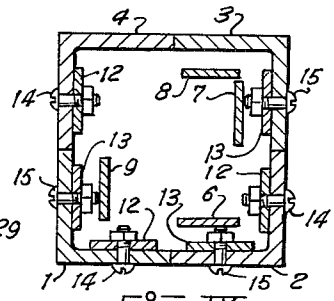

Fig. IX

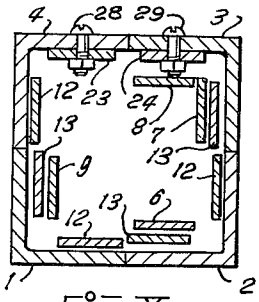

Fig. X

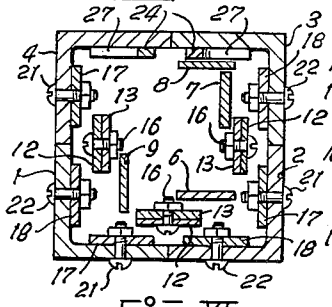

Fig. XI

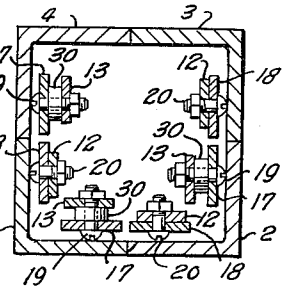

Fig. XII

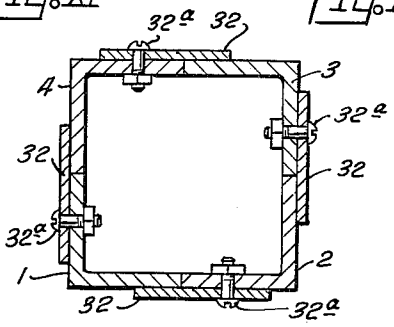

Fig. XIII

INVENTOR

Herman A. Glidewell

BY Howard E. Moore

ATTORNEY

United States Patent Office

3,199,518

Patented Aug. 10, 1965

1

3,199,518
COLLAPSIBLE SHELTER FRAME

Herman A. Glidewell, 8155 San Benito, Dallas 18, Tex.

Filed Dec. 9, 1963, Ser. No. 328,812
5 Claims. (Cl. 135—4)

This invention is concerned with a collapsible and foldable frame which may be employed as a shelter when suitable covering material is placed thereover.

The device herein disclosed is primarily intended as a collapsible frame over which camouflage material can be placed to provide a hunting blind, but could, of course, be employed as a frame over which any desired covering material (such as a tarpaulin) could be placed to provide protection against the weather. For instance, it could be placed over a manhole and covered material placed thereover to protect men against the weather who might be working in the manhole. In other words it is a general duty shelter frame.

A distinct advantage of the shelter frame forming the subject matter of this application is that the frame may be collapsed into a very compact, rectangular form with all braces enclosed within the angle shaped legs so that it may be easily stored in an automobile trunk for transporting, or takes up a minimum amount of space when stored. At the same time it may be unfolded to provide a roomy and sturdy shelter frame with a minimum amount of effort and time.

The collapsible shelter frame hereinafter described in detail comprises four angle shaped legs, which when collapsed together provide an elongated, rectangular housing. The legs are connected by pivotally related transverse braces and by top braces, the top braces being arranged to be disconnected at the one end and pivoted at the other end to the corner post so that when disconnected it may be collapsed into the confines of the corner post. The pivotally related transverse braces may also be collapsed into the confines of the corner post, the said braces being so related, connected and shaped as to allow all of said braces to be confined within the rectangular housing provided by the four corner posts, providing a very compact package when the shelter frame is in collapsed condition.

Other and further objects of the invention will become apparent upon reading the detailed specification hereinafter following, and by referring to the drawings annexed hereto.

A suitable embodiment of the invention is shown in the attached drawings, wherein:

FIGURE I is a side perspective view of the collapsible shelter frame in open and erected position;

FIGURE II is a top plan view of the shelter frame as shown in FIGURE I;

FIGURE III is a side elevational view of the shelter frame taken from the front side of FIGURE I, showing same in partially collapsed condition;

FIGURE IV is a side elevational view showing the shelter frame in collapsed condition;

FIGURE V is a fragmentary perspective view, partially exploded, showing the connection of the disengageable front braces, illustrating how the inner ends thereof are attached to the top transverse brace;

FIGURE VI is a fragmentary enlarged perspective view, showing typical attachment of the top transverse braces to the corner posts;

FIGURE VII is a partially sectionalized, side elevational view of the shelter frame in collapsed position;

FIGURE VIII is a view similar to FIGURE VII wherein the shelter frame in collapsed position has been sectionalized to show the front diagonal braces hanging inside the corner posts to which they are pivotally attached;

2

FIGURE IX is a transverse sectional view taken along the line IX—IX of FIGURE VII;

FIGURE X is a transverse sectional view taken along the line X—X of FIGURE VII;

FIGURE XI is a transverse sectional view taken along the line XI—XI of FIGURE VII;

FIGURE XII is a transverse sectional view taken along the line XII—XII of FIGURE VII; and

FIGURE XIII is a transverse sectional view taken along the line XIII—XIII of FIGURE VII.

Numeral references are employed to designate the various parts shown in the drawings, and like numerals indicate like parts throughout the various figures of the drawings.

As shown in FIGURE I, the collapsible shelter frame includes four corner posts **1**, **2**, **3** and **4**, which are right angular shaped members, preferably made of light weight aluminum or other suitable metallic material, which are complementary in shape and dimensions so that when collapsed together as shown in FIGURE IV, they provide a hollow rectangular housing.

The corner posts **1**, **2**, **3** and **4** preferably have pointed lower ends **5** thereon so that they may be made to penetrate the earth to provide stability.

Transverse top braces **6**, **7**, **8** and **9** are attached between the upper ends of the corner posts **1**, **2**, **3** and **4**. Each transverse top brace **10** (FIGURE VI) is pivotally connected by a pivot bolt and nut assembly **10** at an upper corner of one of the posts **1**, **2**, **3**, and **4**, said top braces being pivotally attached to different posts. The opposite ends of the transverse braces **6**, **7**, **8** and **9** are detachably secured to the opposite corner posts from that to which they are pivotally attached by means of bolts **11***a* (FIGURE VI) which pass through aligned holes in the upper ends of the posts and are detachably secured therein by means of wing nuts **11**, so that upon removal of the wing nut, the transverse brace **6**, **7**, **8** or **9** may be detached from the corner post, and allowed to pivot downwardly upon the pivotal connection **10**, within the confines of the angle shaped post to which it is pivotally secured.

The transverse top braces **6**, **7** and **9** each include an inwardly turned offset **33** so that when they are pivoted within the angle shaped corner posts **1**, **2** or **3**, sufficient clearance is provided between the transverse brace and the corner posts to permit the diagonally disposed braces hereinafter described to be collapsed therebetween.

On three sides of the shelter frame there are provided the diagonally disposed crossed braces **12** and **13**, which are pivotally attached at their upper ends to the corner posts by means of bolt and nut assemblies **14** and **15**. They are pivoted together at the point where they cross by the bolt and nut assemblies **16**, and are pivotally connected at their lower ends to the short braces **17** and **18** by means of the bolt and nut assemblies **19** and **20**. The links **17** and **18** are pivotally attached to the corner posts by means of bolt and nut assemblies **21** and **22**.

The diagonally disposed braces **23** and **24** are pivotally attached by pivot bolts **28** and **29** to the corner posts **4** and **3**, respectively. The braces **23** and **24** are detachably secured centrally of the transverse top brace **8** by means of threaded bolt **25** and wing nut **26**. The bolt **25** passes through an appropriate hole in the top brace **8**. The slots **27** in ends of the braces **23** and **24** are passed over the bolt **25**, and are tightened into place by tightening the wing nut **26** on the bolt **25** on the opposite face of the transverse brace **8**. Thus the inner ends of the diagonal braces **23** and **24** may be disengaged from the top brace **8** and allowed to pivot downwardly about the pivot bolts **28** and **29** within the confines of the channel shaped corner posts **3** and **4**.

As shown in FIGURE XII, the spacer sleeves **30** are placed about the bolts **19** between the ends of diagonal

braces **13** and the innermost links **17**, to permit the end of link **17** to overlap the end of link **18** when collapsed into the confines of the corner posts.

A guide lug **32** is secured to each leg **1**, **2**, **3** and **4** at the lower ends by bolts **32***a* and extends outwardly thereof, and is arranged to overlap the side of the opposite leg, to thereby guide and hold the legs in alignment when the shelter frame is collapsed and folded together.

Suitable buckle straps **31** are provided to extend about the collapsed shelter frame to hold it together, as shown in FIGURE IV.

It will be seen from an examination of the cross-sectional views of FIGURES IX–XIII, that all of the braces supporting the erected shelter frame are collapsed and confined within the rectangular housing formed by the complementary shaped corner posts, providing a neat package which is very compact, which is easy to erect, and collapse, takes up a minimum amount of space, yet provides a very sturdy shelter frame.

In order to collapse the shelter frame as shown in FIGURE I, wing nut **26** is loosened, allowing the diagonal braces **23** and **24** to be disengaged from the top brace **8**. These braces may then be allowed to pivot downwardly about the pivots **28** and **29** within the confines of the corner posts **3** and **4**. The wing nuts **11** are then removed, allowing the cross braces **6**, **7**, **8** and **9** to be disengaged from the posts to which they are connected and allowed to swing downwardly about the pivot bolts **14** within the confines of the corner posts to which they are pivotally attached. Opposite pairs of corner posts may then be moved together as the diagonal braces **12** and **13** are collapsed about the pivot point **16**, and as this occurs, the braces **17** and **18** move downwardly about the pivot points **21** and **22** as they pivot about the pivot bolts **19** and **20**. The braces **12** and **13** are spaced apart by the spacers **30** and are allowed to overlap as shown in FIGURE XII. Since the top braces **6**, **7** and **9** are offset as indicated at **33**, the top braces will be disposed outwardly of the overlaped diagonal braces **12** and **13**, whereby all braces are confined in overlapping relationship within the hollow rectangular housing provided by the four complementary angle corner posts **1**, **2**, **3** and **4**.

The cross braces **12** and **13** and links **17** and **18** could also be placed on the side where the diagonal braces **23** and **24** are disposed and in such case braces **23** and **24** could be eliminated. However, it is preferable that braces **23** and **24** be employed instead of such cross braces and links so as to provide a substantially open side for easy access to the interior of the shelter.

It will be understood that other and further embodiments of the invention may be devised without departing from the spirit and scope of the appended claims.

Having described my invention, I claim:

1. In a collapsible shelter frame,
four corner posts,
top braces extending between the posts,

each said top brace being pivotally attached at one end to a separate post
and disengageably attached at the other end to an opposite post;
diagonally extending crossed braces
pivotally attached at their upper ends to opposite posts
and pivotally attached together at the point where they cross;
links
having one of their ends pivotally attached to the lower ends of the crossed braces
and pivotally attached to opposite corner posts at their other ends;
the said corner posts being right angular in cross-section
and complementary in dimension
and disposed in opposed relationship to each other so as to provide a hollow rectangular housing when brought together;
and the braces being of such length and dimension that they may be confined within the rectangular housing when the frame is collapsed.

2. The combination called for in claim **1** with the addition of
a pair of diagonal braces,
each being pivotally attached at one end to an opposite post
and being disengageably attached at their other ends to one of the top braces.

3. The combination called for in claim **1** wherein
the top braces on the sides where the crossed braces are disposed are offset inwardly adjacent the posts to which they are pivotally attached.

4. The combination called for in claim **1** with the addition of
guide members attached to the posts arranged to overlap opposite posts.

5. The combination called for in claim **1** wherein
spacer members are disposed between the end of the innermost cross brace and the end of the link to which it is pivotally connected.

References Cited by the Examiner

UNITED STATES PATENTS

890,724	6/08	Stocking.	
907,032	12/08	Gohen.	
2,268,281	12/41	De Tosto	135—4
2,393,415	1/46	Resenfeld	135—4
2,841,149	7/58	Graham	135—4
2,982,379	5/61	Fischer	182—152 X

FOREIGN PATENTS

20,740	8/35	Australia.
4,872	12/13	Great Britain.

HARRISON R. MOSELEY, *Primary Examiner.*