Feb. 17, 1931. E. SORENY 1,792,513

LIQUID SOAP DISPENSING DEVICE

Filed Aug. 9, 1929

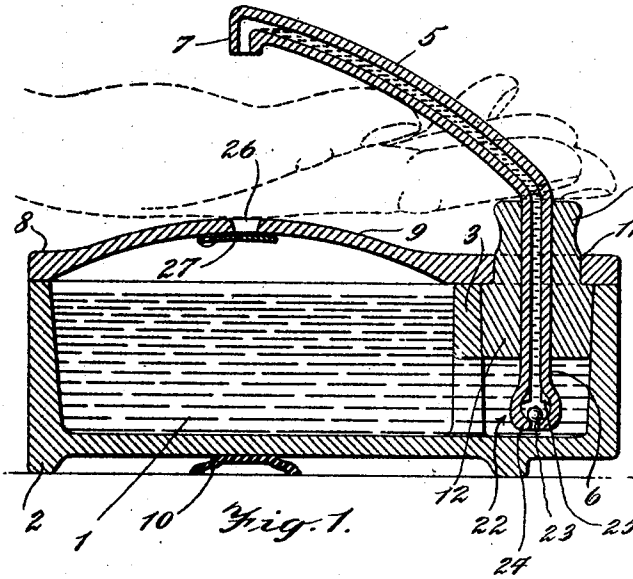

Fig. 1.

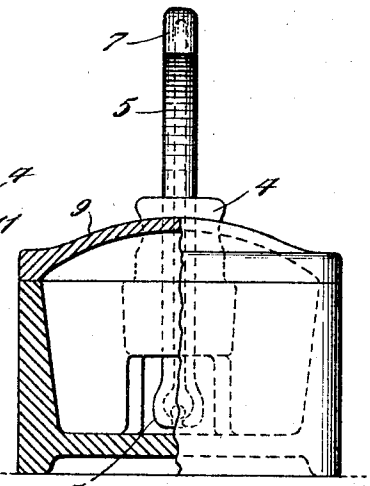

Fig. 3.

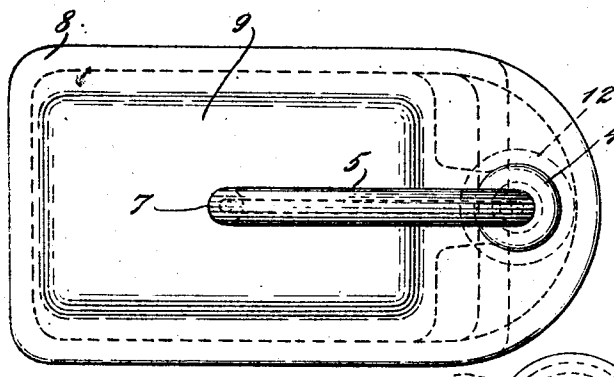

Fig. 2.

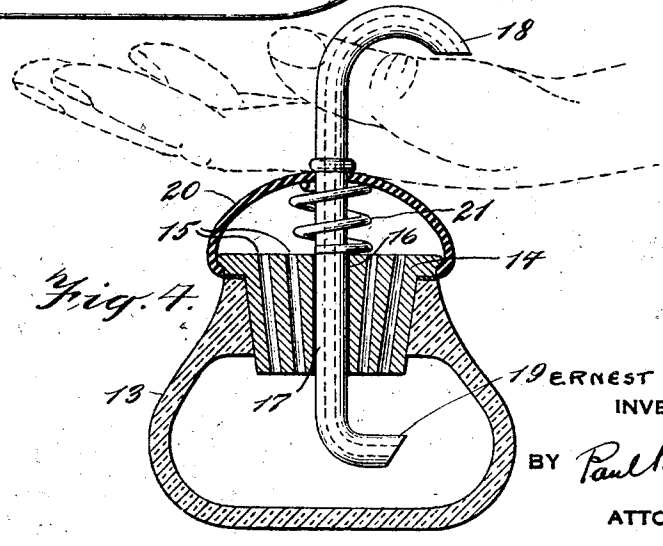

Fig. 4.

ERNEST SORENY
INVENTOR

BY Paul Kotisch

ATTORNEY

Patented Feb. 17, 1931 1,792,513

UNITED STATES PATENT OFFICE

ERNEST SORENY, OF NEW YORK, N. Y.

LIQUID-SOAP-DISPENSING DEVICE

Application filed August 9, 1929. Serial No. 384,649.

This invention relates to liquid soap dispensing devices.

It is an object of this invention to provide an improved form of liquid soap container adapted to deliver a given quantity of soap in response to manual operation.

In accordance with my invention I provide a container for liquid soap or similar material, having a compressible wall adapted for manipulation and a discharge pipe arranged to deliver the liquid soap from the interior of the receptacle.

In accordance with a preferred form of my invention, the soap delivery pipe is arranged so as to eject the soap directly into the hand of the user. The container may be made of soft rubber, hard rubber or other suitable material and be provided with a discharge pipe of similar material. The top side of the receptacle may be made of soft rubber which is hermetically joined to the top of the container so that the entire receptacle is airtight, except for the discharge pipe. The cover is resilient so that it may be pushed in to create sufficient pressure to discharge a suitable amount of soap.

The above mentioned and further objects and advantages will be made clear in the following description and accompanying drawings.

In the drawings, Fig. 1 illustrates in vertical section a liquid soap dispensing device embodying my inventon;

Fig. 2 is a plan view of the device shown in Fig. 1;

Fig. 3 is an end view partly in section of the same device; and

Fig. 4 is a side elevation partly in section of a modified form of soap dispensing container.

Referring more particularly to the drawings, reference numeral 1 indicates a hollow container constructed of soft rubber. At the bottom side of the container is formed a rim 2 which extends around the periphery thereof. This rim forms a sort of suction cup which serves to hold the soft rubber in a fixed position on a wash stand or the like. Positioned at one end of the container is a ring-shaped member 3 which serves to hold a stopper or bushing 4 of hard rubber or other suitable material. Passing through the center of the stopper is a discharge pipe 5 which extends within the container nearly to the bottom, as shown at 6, and at the other end is bent over to form a downwardly discharging spout 7. A soft rubber cover 8 is firmly attached to the top of the receptacle in airtight manner by vulcanizing, cementing, or other suitable process. This cover is arched up in the center, as shown at 9, to insure greater resiliency. The cover has a perforation 11 which accommodates the stopper or bushing 4. This perforation is slightly smaller than the body portion 12 of the stopper and therefore serves firmly to hold the stopper in position. It may be found advantageous to provide the discharge pipe with a foot valve 22 comprising a ball 23 and a seat 24. For preventing the ball 23 from shutting off the flow outwardly through the pipe 5, a series of ribs 25 may be used. This valve serves to mantain the discharge tube full of liquid at all times. Where such a foot valve is used an air inlet valve is necessary. As shown in the drawings, this valve may comprise an opening 26 in the cover 8, and a flap member 27 secured at one end to the inside of the cover in any suitable manner.

In operation, the hand of the operator is placed, as shown at the dotted lines, with the back against the crowned portion 9 of the cover 8, and pressed firmly against the cover, thereby shutting valve 27 and causing the cover to be depressed sufficiently to eject a quantity of liquid soap from the container through the spout 7 into the palm of the hand. When the hand is removed the cover springs back, due to its own resiliency, drawing a fresh supply of air through the opening 26 past the flap valve member 27. The soap in pipe 5 is prevented from returning to the container by valve 22, the ball 23 of which drops onto seat 24.

In case valves are not used in the device, air to replace the ejected fluid enters the container through the pipe 5 as a result of the return of cover 8 to its normal position.

If desired, additional suction holding means may be supplied, as shown at 10. As

illustrated, 10 comprises the usual form of suction cup and may be made of soft rubber. If desirable, the container 1 may be made of metal or any other material, either with or without suction feet.

The device shown in Fig. 4 operates on the same principle as that shown in Figs. 1 to 3, but is slightly different in construction. 13 represents a container which may be made of glass, metal, rubber, or any other suitable material, and is provided at the top with a stopper 14 having a plurality of holes 15 therein. Centrally arranged in the stopper and slidably positioned in an aperture 16 is a discharge pipe 17. This pipe is provided at its upper end with a downwardly curved spout 18 and at the bottom end with a curved inlet opening 19. This pipe has secured thereto a hemispherical body of soft rubber or other resilient material 20, which in turn has its edge fastened to the stopper. In operation, the user's hand is placed with the back against the hemispherical rubber portion 20, with the pipe 17 between the fingers. Upon thrusting the hand downwardly, a quantity of soap is forced out of the container 15 through the discharge spout 18 into the palm of the hand. In order to insure more positive action of the hemispherical member 20, a compression spring 21 may be utilized. This spring serves to maintain the hemispherical portion in an upward position. The openings 15 are necessary to conduct the air from the inside of the member 20 downwardly into the soap chamber.

The device shown in Fig. 4 may be provided with valves similar to those shown in connection with Figs. 1–3.

I have described a particular embodiment of my invention for the purposes of illustration, but wish it understood that various modifications and adaptations may be made therein without a departure from the spirit of the invention as set forth in the following claims.

What is claimed is:

1. In a liquid soap dispensing device, a flat hollow container, a removable stopper in one end thereof, a discharge pipe extending from said stopper to a position over the center of said container, and a cover for said container having a resilient portion under the outlet end of said pipe.

2. In a liquid soap dispensing device, an elongated flat container, a discharge pipe extending from one end of said container to a position above the center thereof and having a downwardly turned spout, said container comprising manually compressible means adapted to force soap from said container through said discharge pipe.

3. A liquid soap dispensing device comprising a container, a discharge pipe extending above said container and having a downwardly turned spout, said container comprising manually compressible means adapted to force soap from said container through said discharge pipe, and suction means for preventing movement of the container upon manipulation thereof.

4. In a liquid soap dispensing device, an elongated container having a discharge pipe at one end, said pipe extending upwardly and having a downwardly turned spout at a position over the center of said container and a cover for said container having a resilient portion under said spout.

5. A device in accordance with claim 2 wherein an air inlet valve is provided for the container and a check valve is provided for the outlet pipe.

In testimony whereof, I have signed my name to this specification this 30th day of July, 1929.

ERNEST SORENY.