US 20100000699A1

(19) **United States**

(12) **Patent Application Publication**

Uchida et al.

(10) **Pub. No.: US 2010/0000699 A1**

(43) **Pub. Date: Jan. 7, 2010**

(54) **DIE CASTING MACHINE AND DIE CASTING METHOD**

(75) Inventors: **Masashi Uchida**, Yamaguchi (JP); **Kazuki Hiraizumi**, Yamaguchi (JP); **Yoshinori Okazaki**, Yamaguchi (JP)

Correspondence Address:
IP GROUP OF DLA PIPER LLP (US)
ONE LIBERTY PLACE, 1650 MARKET ST, SUITE 4900
PHILADELPHIA, PA 19103 (US)

(73) Assignee: **Ube Machinery Corporation, Ltd.**, Ube-shi, Yamaguchi (JP)

(21) Appl. No.: **12/447,000**

(22) PCT Filed: **Oct. 11, 2007**

(86) PCT No.: **PCT/JP2007/070296**

§ 371 (c)(1),
(2), (4) Date: **Apr. 24, 2009**

(30) **Foreign Application Priority Data**

Oct. 25, 2006 (JP) 2006-290165
Sep. 4, 2007 (JP) 2007-229335

Publication Classification

(51) **Int. Cl.**
B22D 17/00 (2006.01)
B22D 17/20 (2006.01)
B22D 17/32 (2006.01)

(52) **U.S. Cl.** **164/113**; 164/314; 164/155.1

(57) **ABSTRACT**

A die casting machine that suppresses the occurrence of surge pressure, prevents the occurrence of burrs and spouting of molten metal, and further minimizes variations in the quality of a molded product on site.

The die casting machine comprises a mold (**101**) that cast-molds a product, an injection cylinder (**102**) for injecting molten metal (**15**) to the mold, and a hydraulic device (**103**) for pressing under high pressure the injection cylinder. The hydraulic device comprises a piston ACC (**20**) that supplies hydraulic oil to press under pressure a piston (**13**) of the injection cylinder (**102**) and an injection cylinder inlet valve (**31**). The piston ACC comprises a high pressure fast pressure-raising piston accumulator (**22**, **322**) and a low-pressure injection piston accumulator (**21**, **321**).

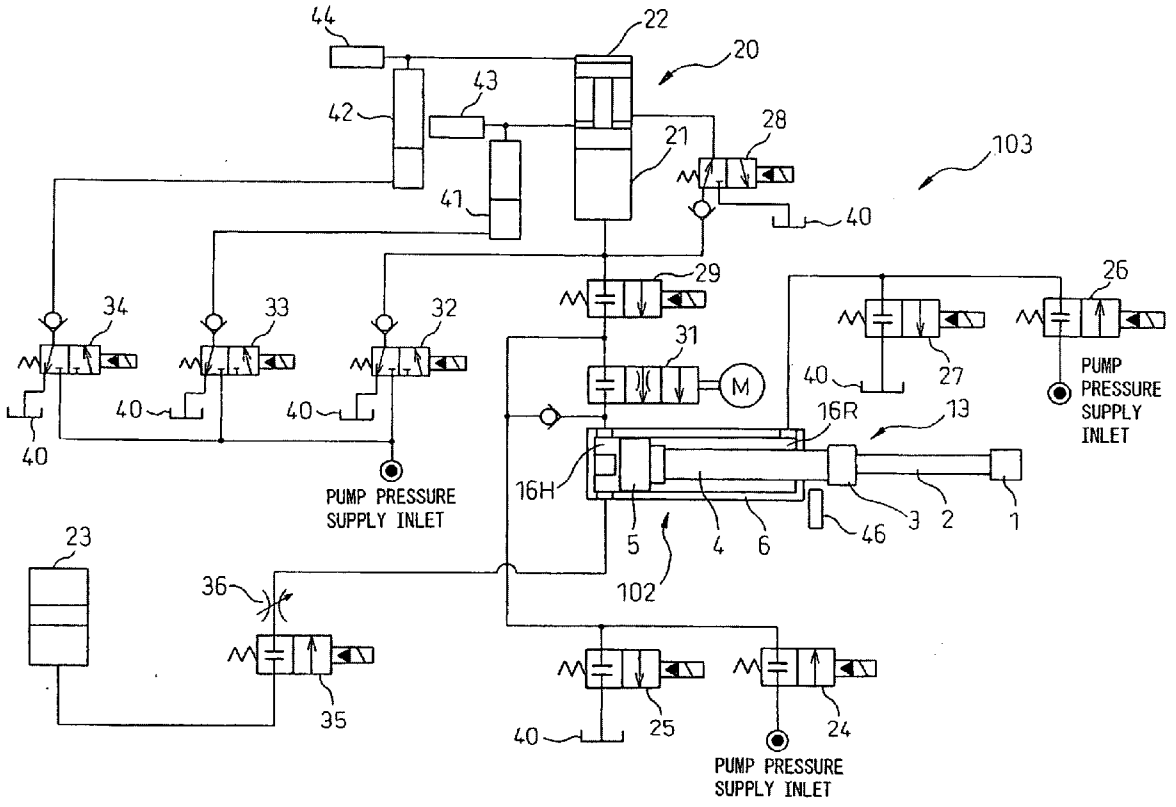

Fig.1

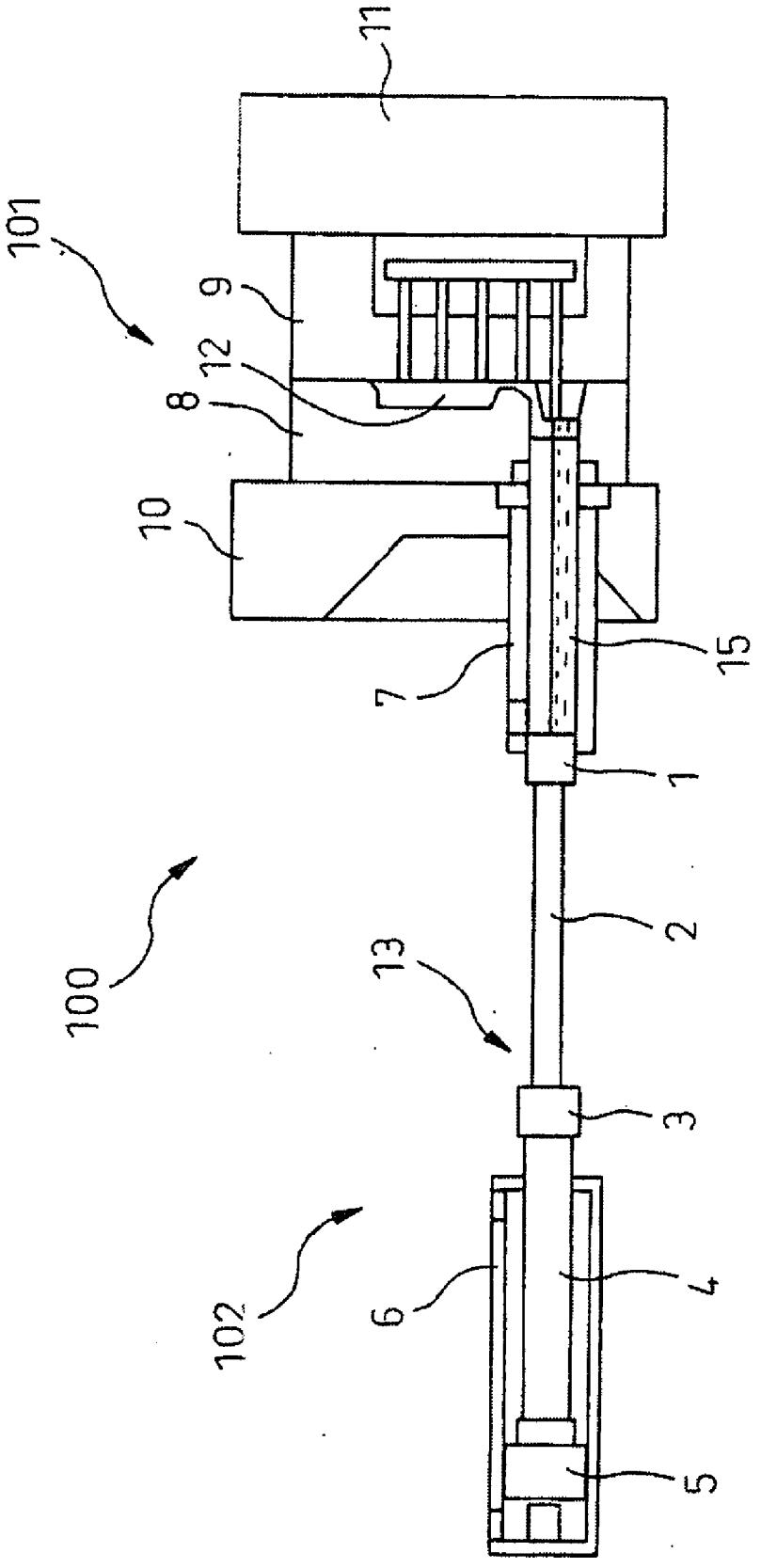

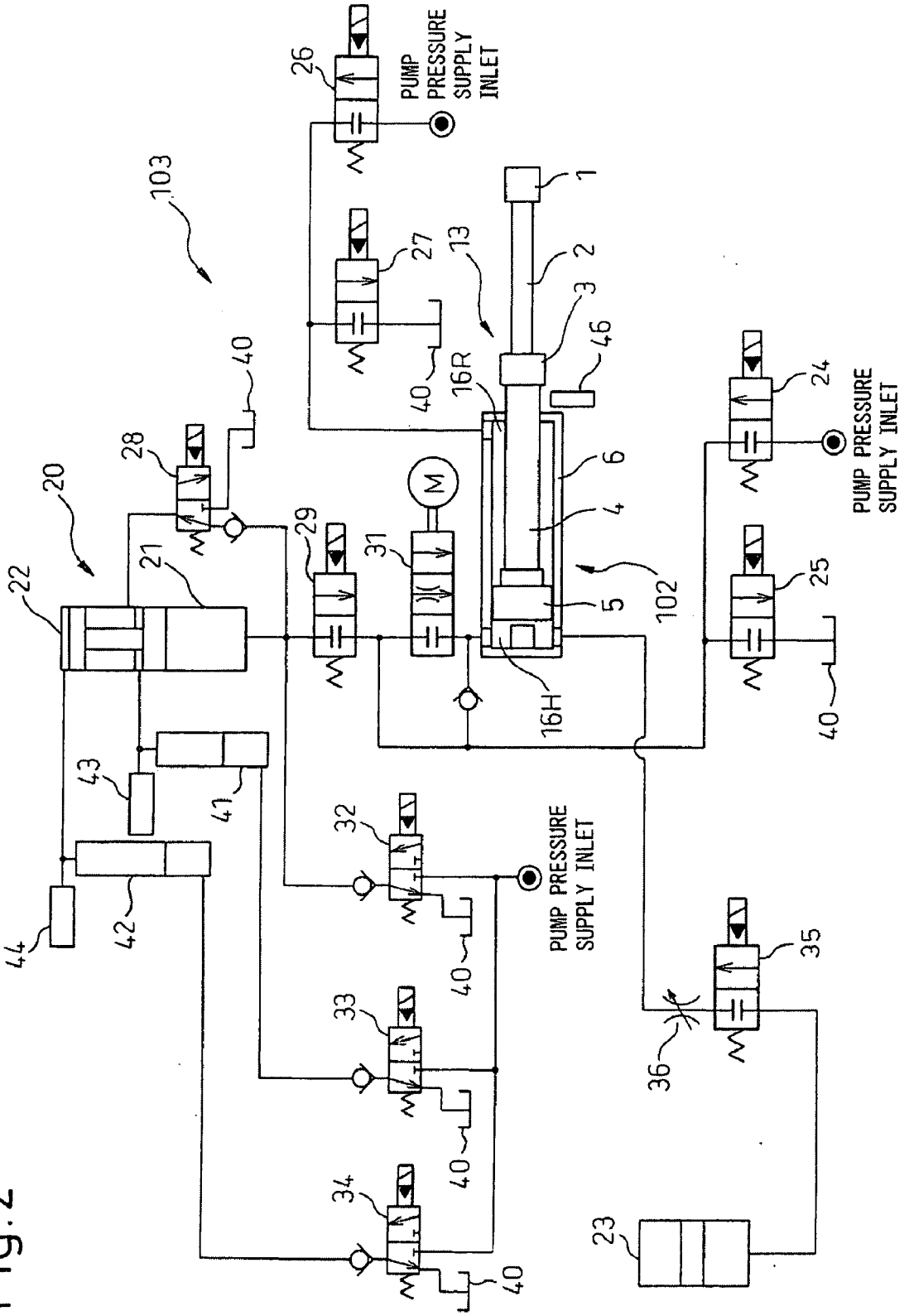
PUMP PRESSURE SUPPLY INLET
PUMP PRESSURE SUPPLY INLET
PUMP PRESSURE SUPPLY INLET
103
20
22
21
26
27
28
29
31
32
33
34
35
36
23
24
25
1
2
3
4
5
6
13
16R
16H
40
41
42
43
44
46
102
M

Fig. 2

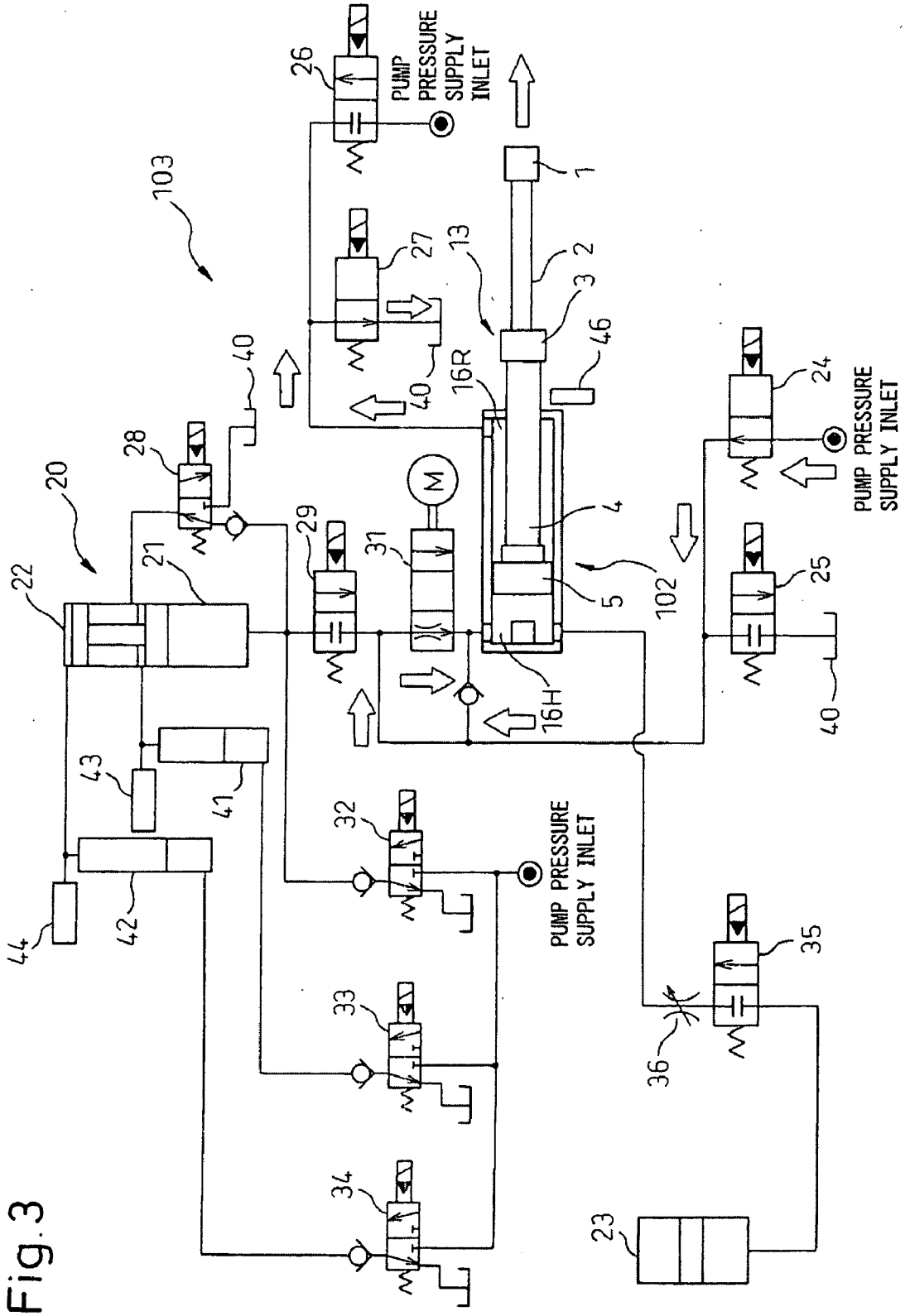
PUMP PRESSURE SUPPLY INLET
PUMP PRESSURE SUPPLY INLET
PUMP PRESSURE SUPPLY INLET
M
1
2
3
4
5
13
16R
16H
20
21
22
23
24
25
26
27
28
29
31
32
33
34
35
36
40
41
42
43
44
46
102
103

Fig.3

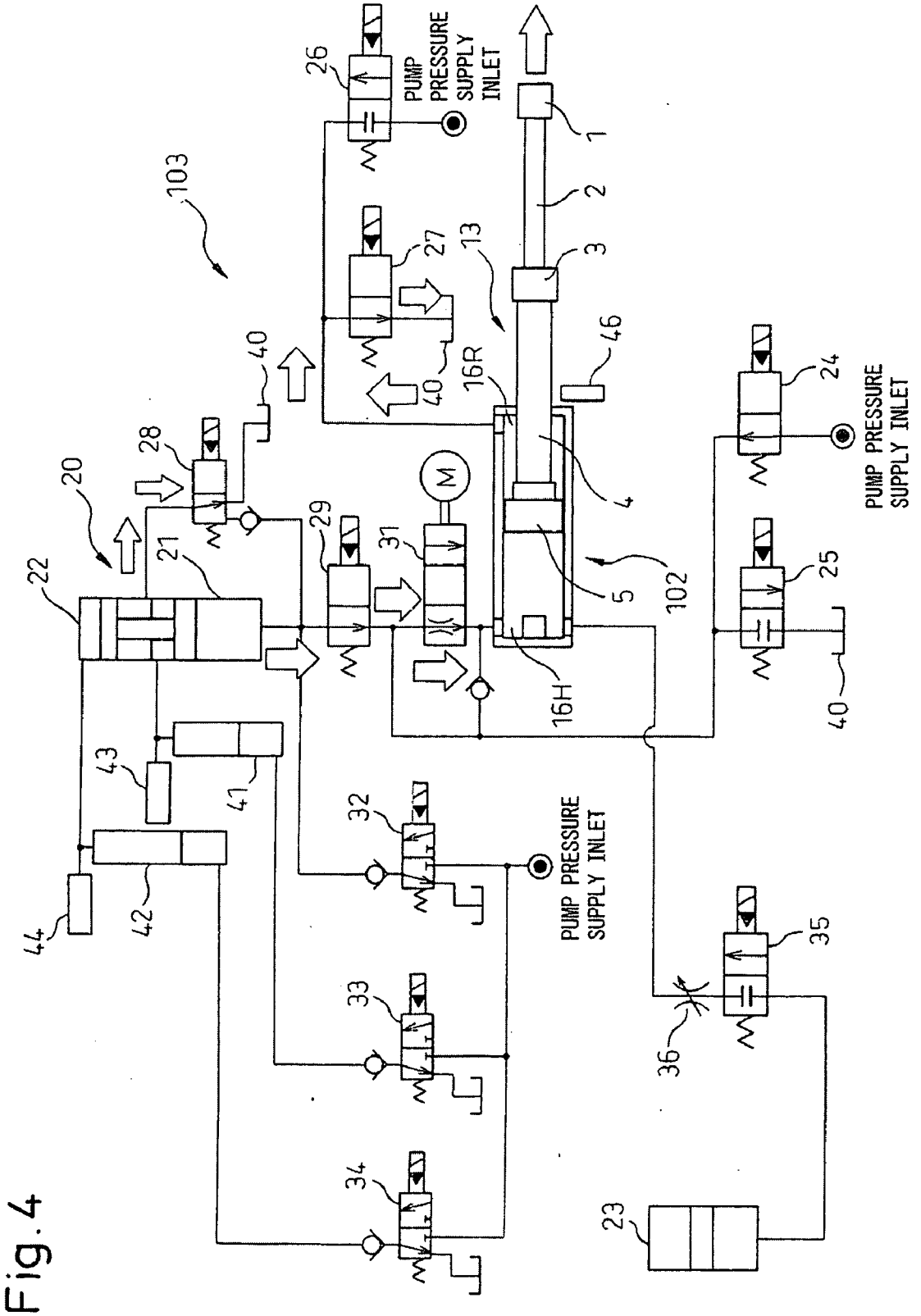
103
PUMP PRESSURE SUPPLY INLET
PUMP PRESSURE SUPPLY INLET
PUMP PRESSURE SUPPLY INLET
M
1
2
3
4
5
13
16R
16H
20
21
22
23
24
25
26
27
28
29
31
32
33
34
35
36
40
41
42
43
44
46
102

Fig. 4

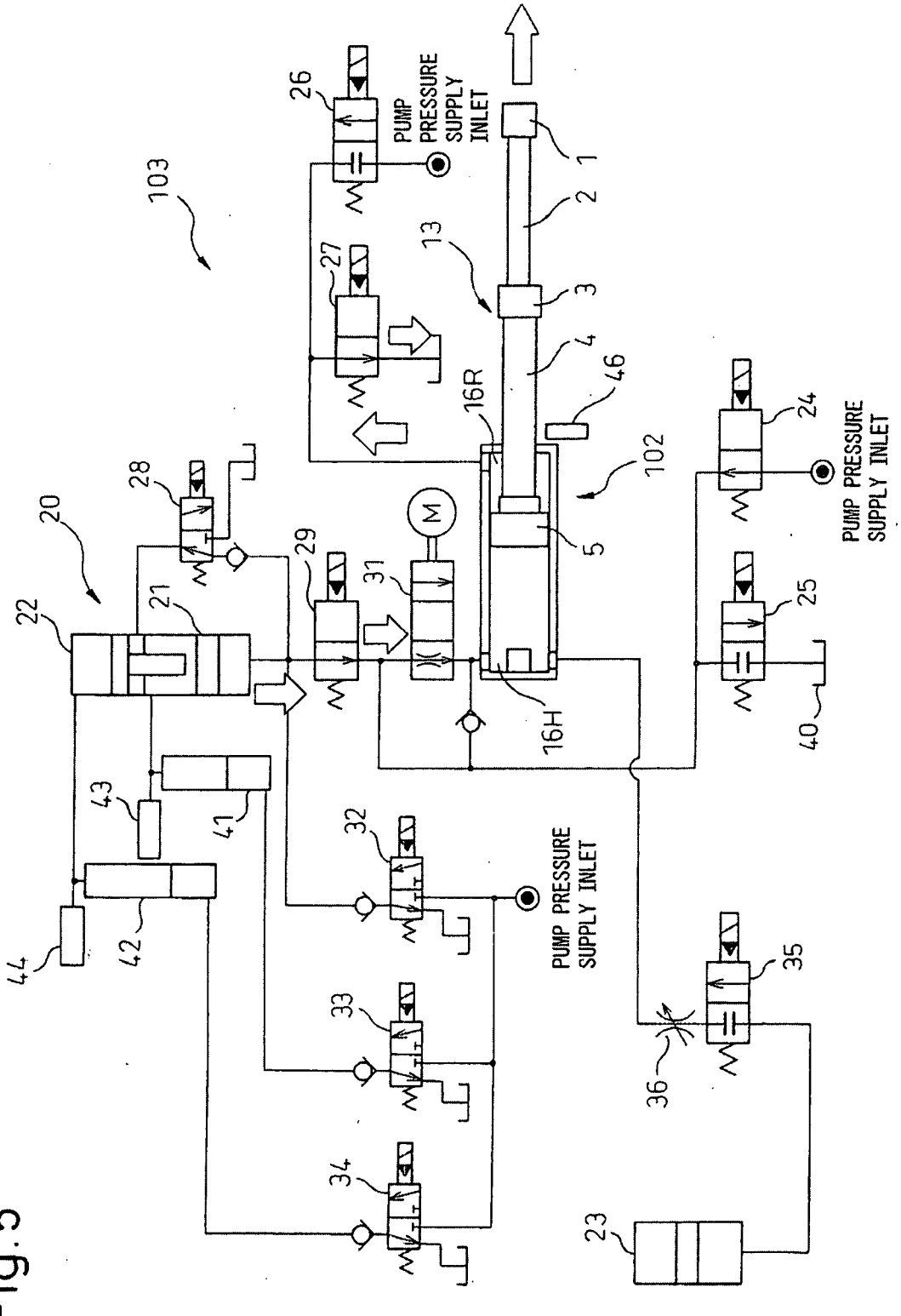
103
20
22
21
28
29
31
M
16R
16H
5
102
46
4
3
13
2
1
26
27
PUMP PRESSURE SUPPLY INLET
24
25
40
PUMP PRESSURE SUPPLY INLET
32
33
34
PUMP PRESSURE SUPPLY INLET
35
36
23
41
42
43
44

Fig.5

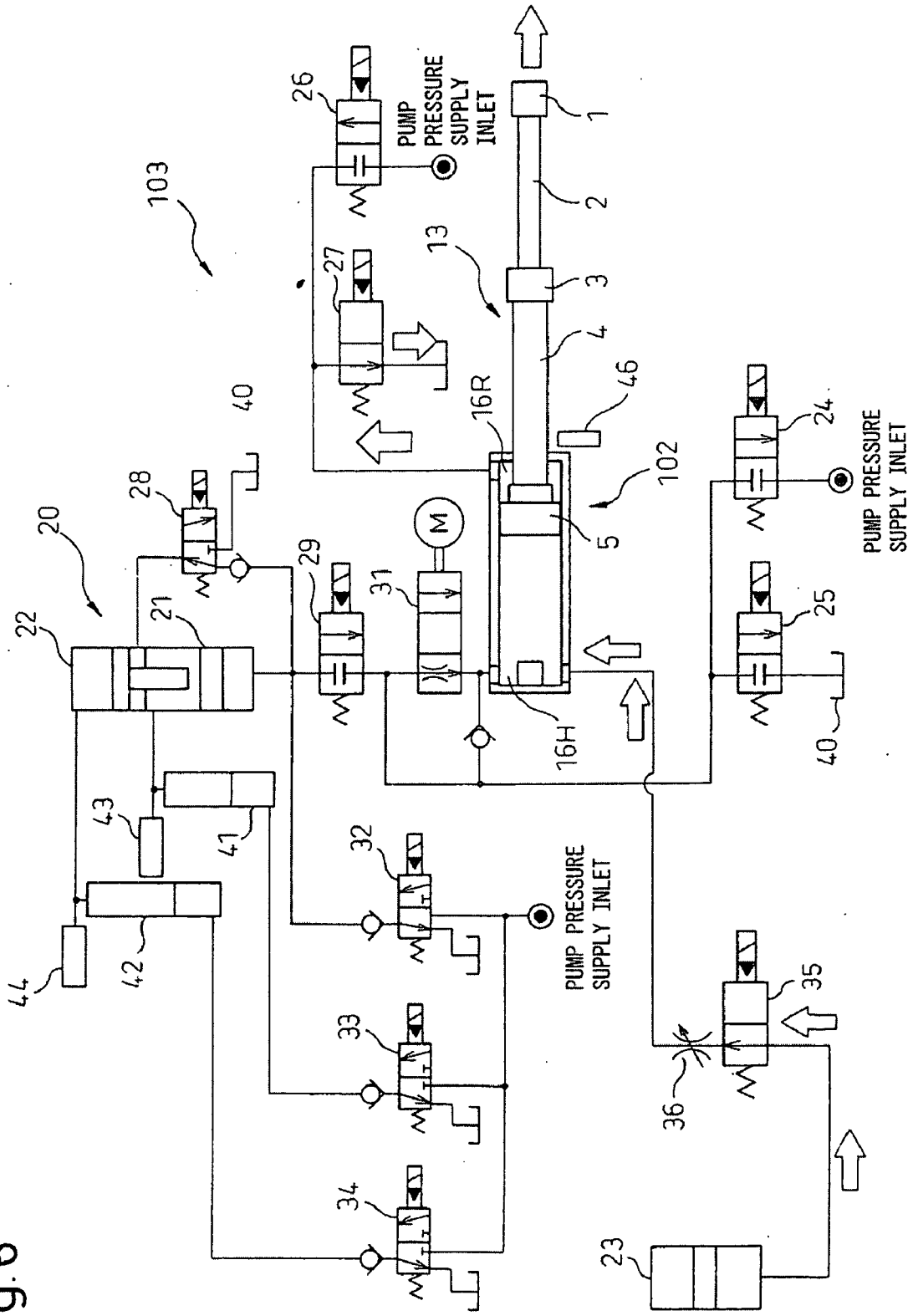
103
26
PUMP PRESSURE SUPPLY INLET
1
2
13
3
4
27
46
16R
102
5
40
28
20
22
21
29
31
M
16H
24
PUMP PRESSURE SUPPLY INLET
25
40
43
41
32
PUMP PRESSURE SUPPLY INLET
44
42
33
35
36
34
23

Fig.6

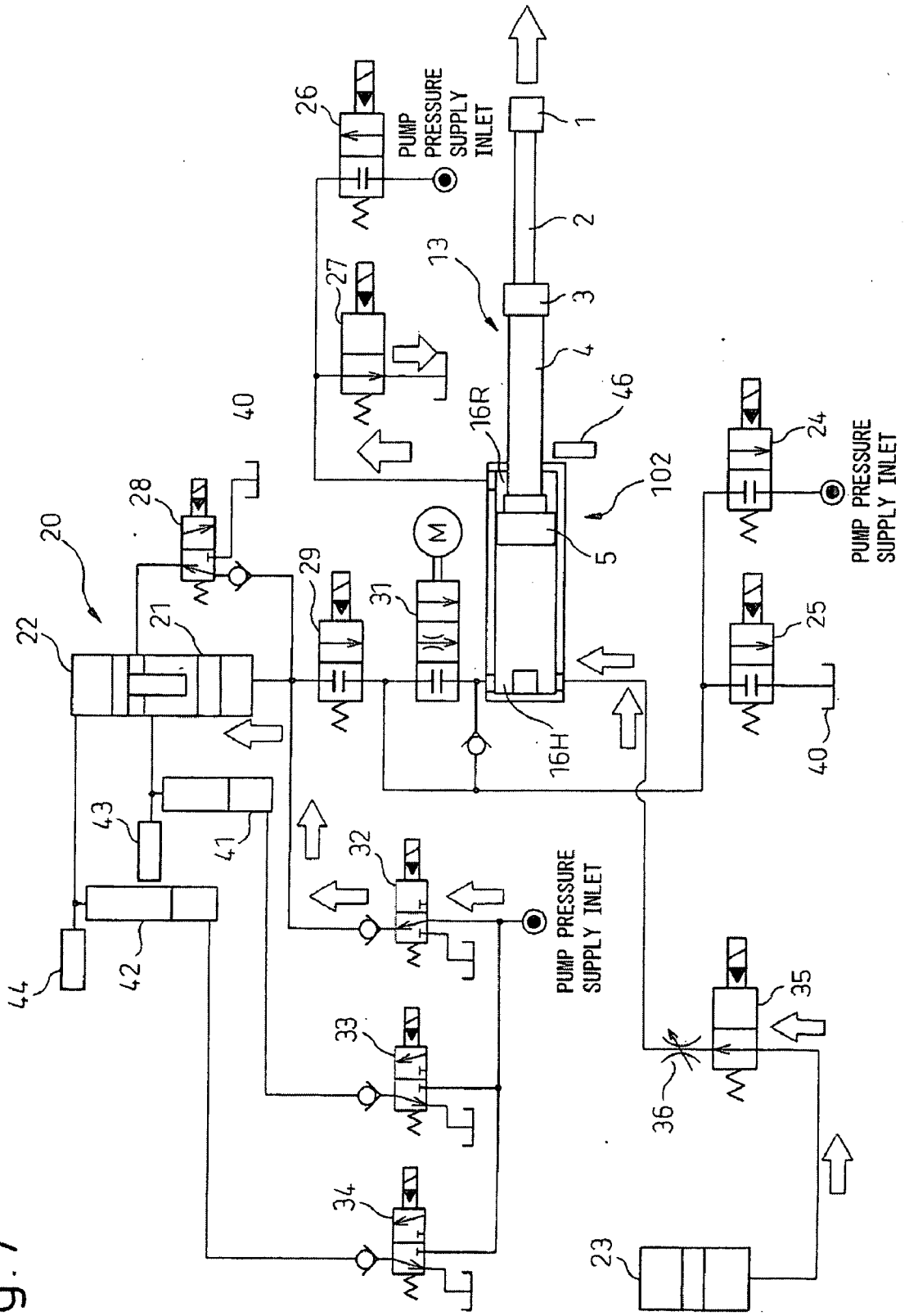
PUMP PRESSURE SUPPLY INLET
PUMP PRESSURE SUPPLY INLET
PUMP PRESSURE SUPPLY INLET
M
1
2
3
4
5
13
16R
16H
20
21
22
23
24
25
26
27
28
29
31
32
33
34
35
36
40
41
42
43
44
46
102

Fig. 7

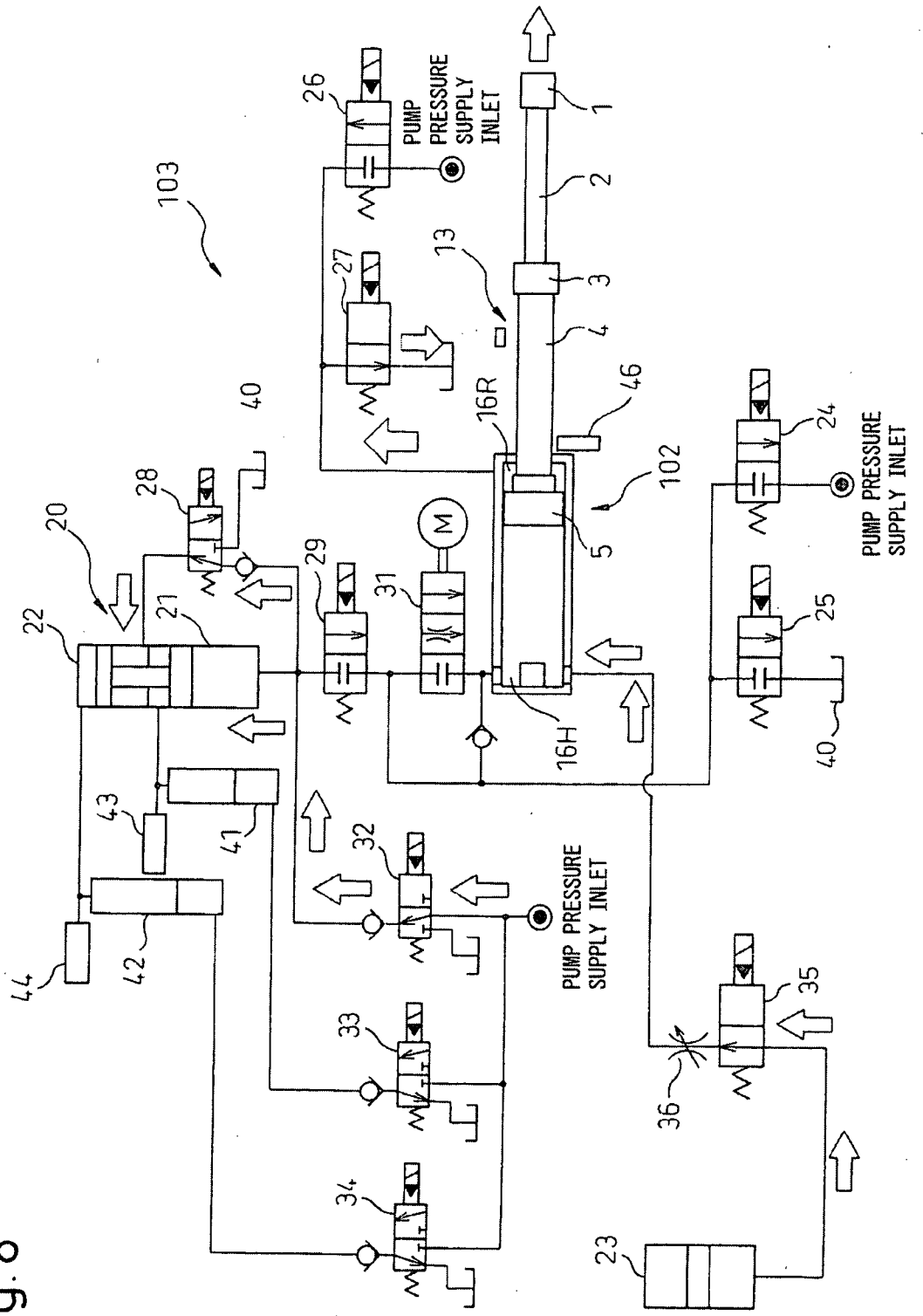
103
PUMP PRESSURE SUPPLY INLET
PUMP PRESSURE SUPPLY INLET
PUMP PRESSURE SUPPLY INLET
1
2
3
4
5
13
16R
16H
20
21
22
23
24
25
26
27
28
29
31
32
33
34
35
36
40
41
42
43
44
46
102
M

Fig. 8

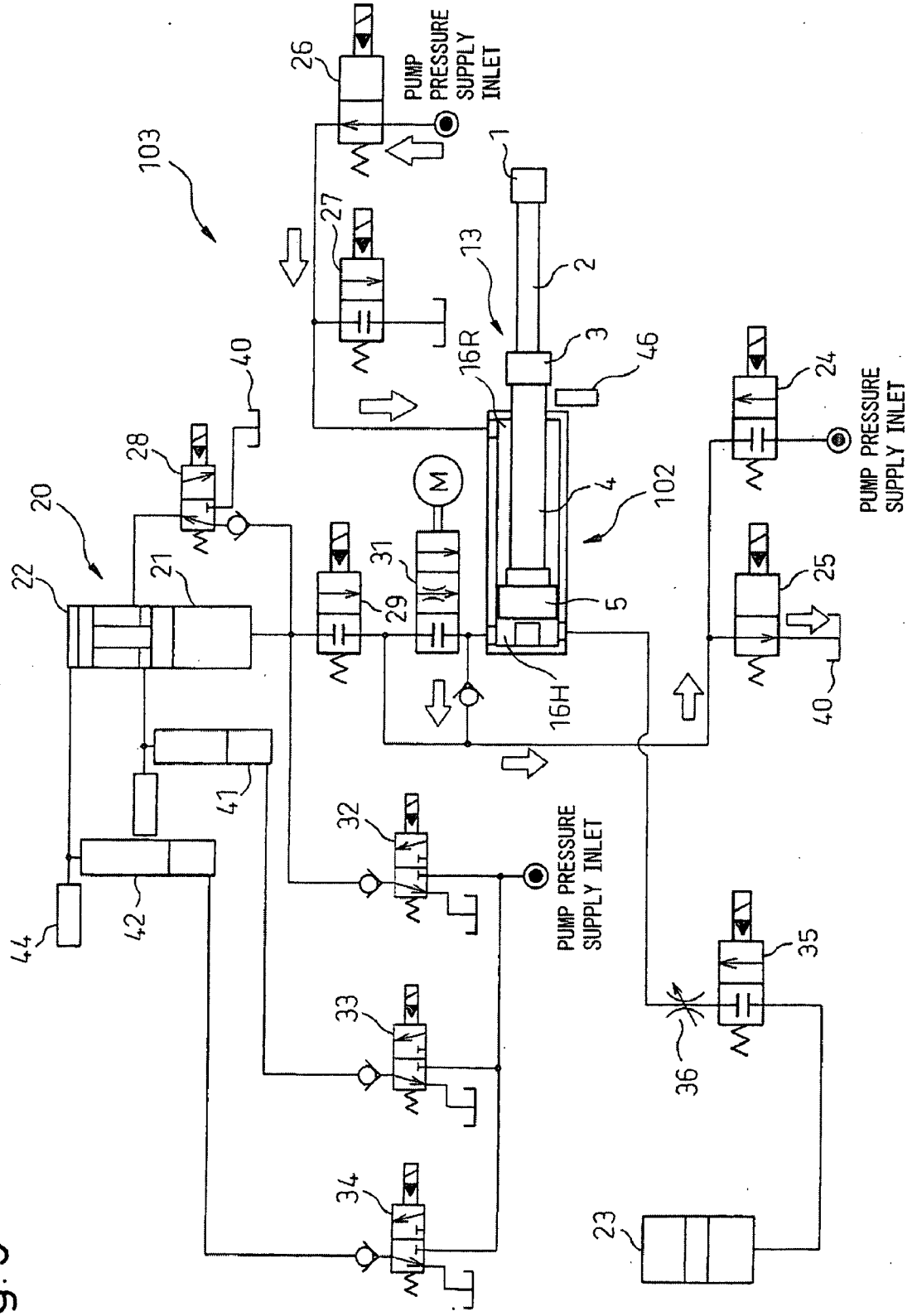
103
26
PUMP PRESSURE SUPPLY INLET
27
1
13
2
3
46
16R
40
28
20
22
21
M
31
29
4
102
5
16H
24
PUMP PRESSURE SUPPLY INLET
25
40
41
32
PUMP PRESSURE SUPPLY INLET
42
44
33
35
36
34
23

Fig. 9

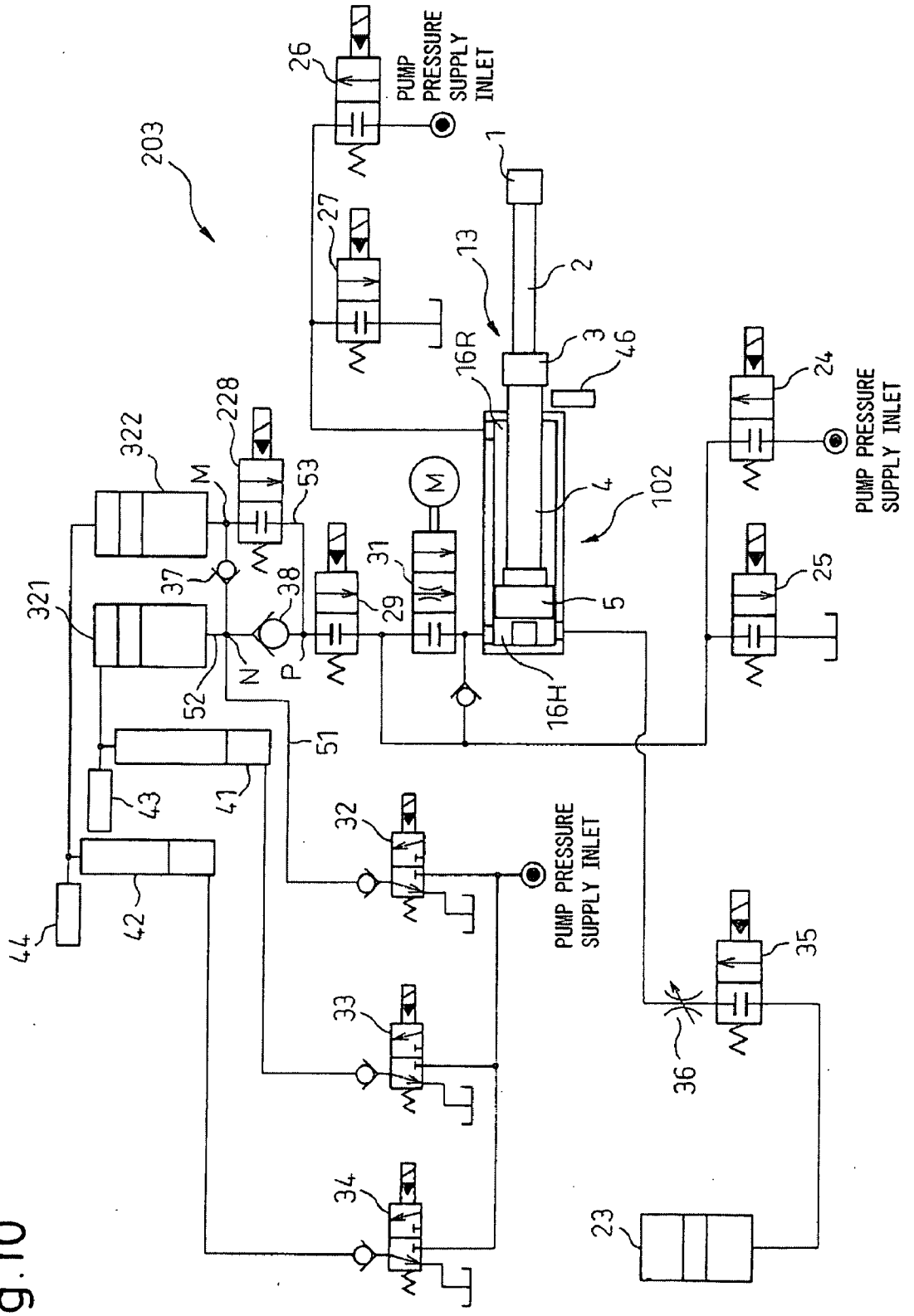
203
26
PUMP PRESSURE SUPPLY INLET
27
1
2
13
16R
3
46
24
PUMP PRESSURE SUPPLY INLET
228
322
M
53
4
102
321
37
38
31
29
5
25
N
P
52
16H
51
43
41
32
PUMP PRESSURE SUPPLY INLET
44
42
33
35
36
34
23

Fig.10

Fig.11

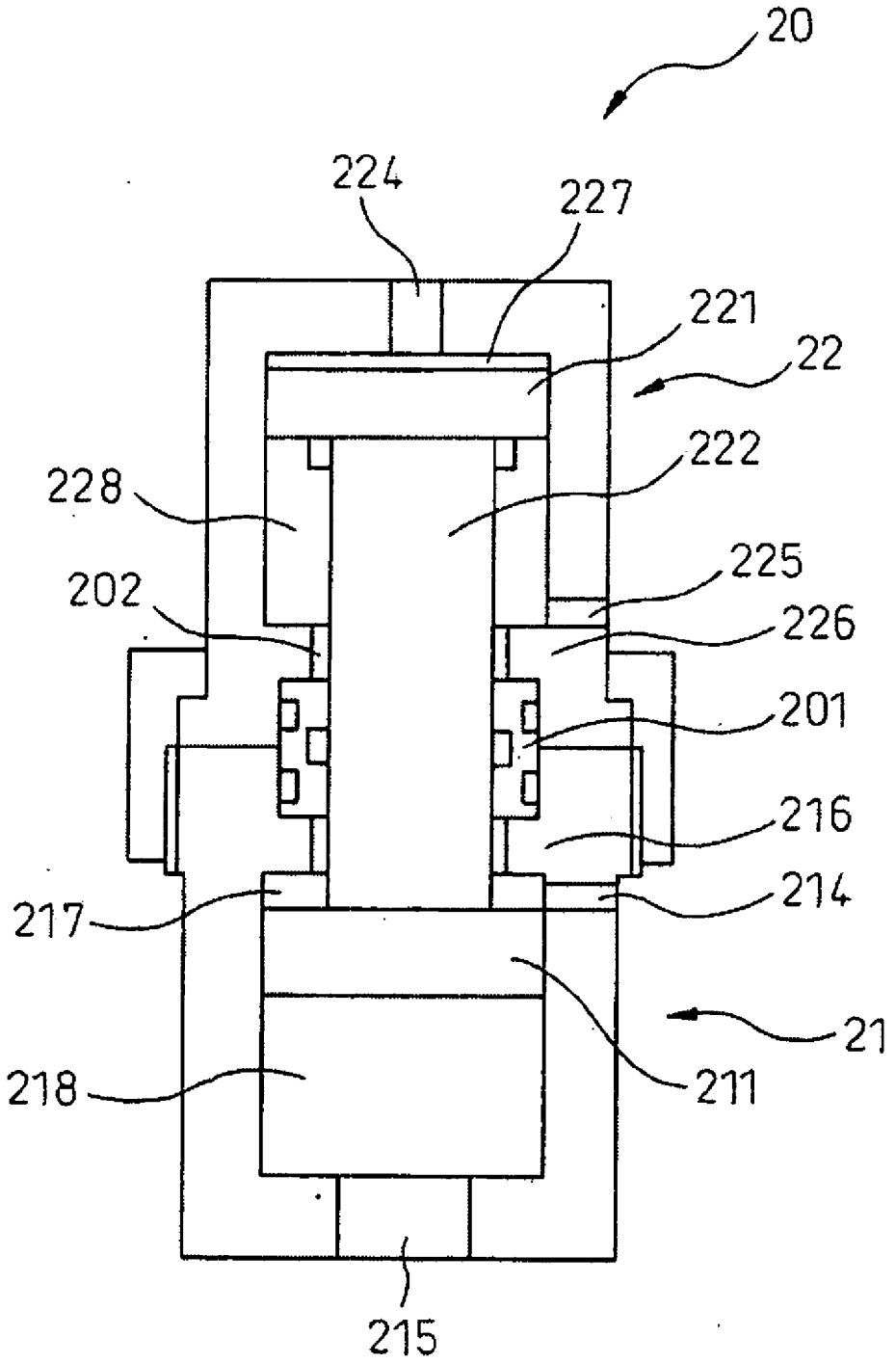
20
224
227
221
22
222
228
225
202
226
201
216
214
217
21
211
218
215

Fig.12

PRIOR ART

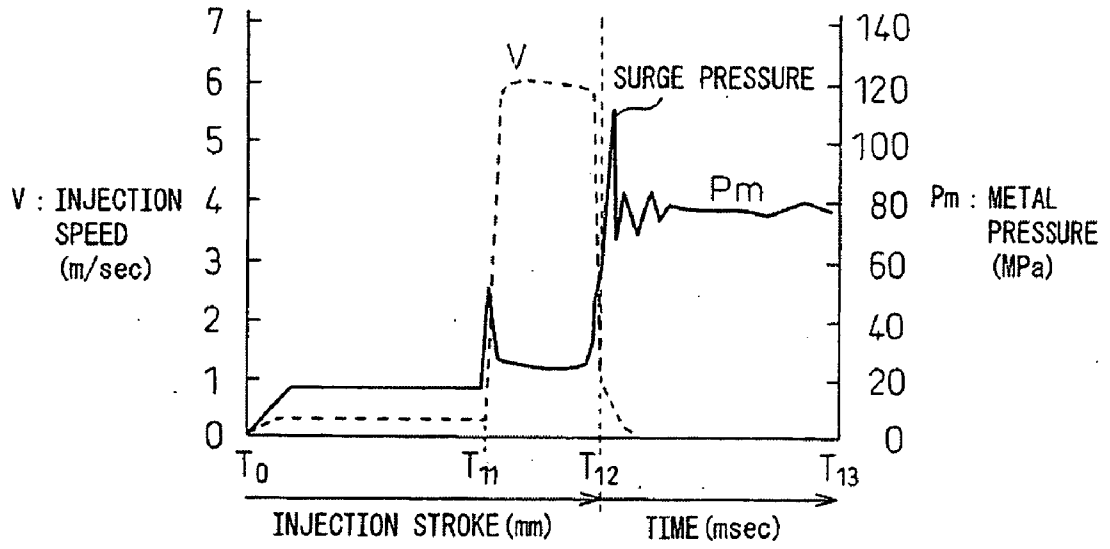

Fig.13

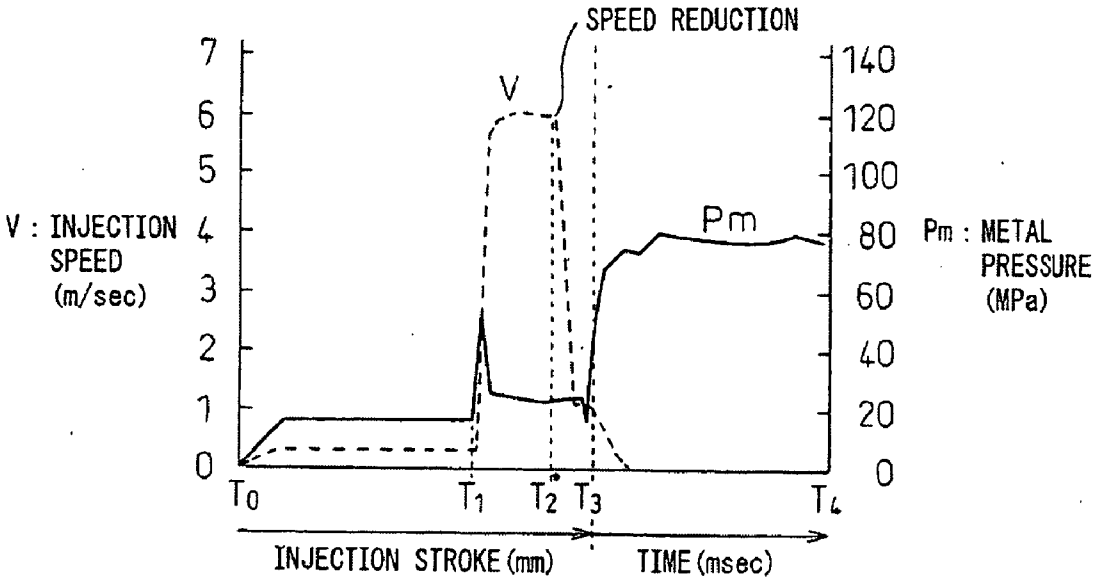

Fig. 14

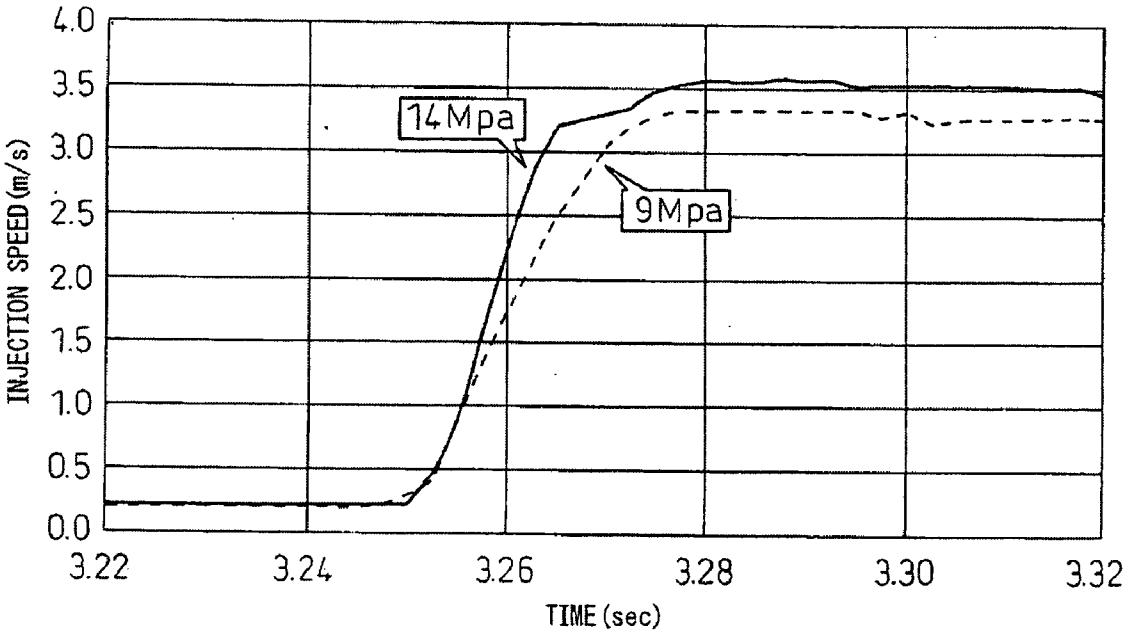
4.0
3.5
3.0
2.5
2.0
1.5
1.0
0.5
0.0
INJECTION SPEED (m/s)
14Mpa
9Mpa
3.22
3.24
3.26
3.28
3.30
3.32
TIME (sec)

Fig.15

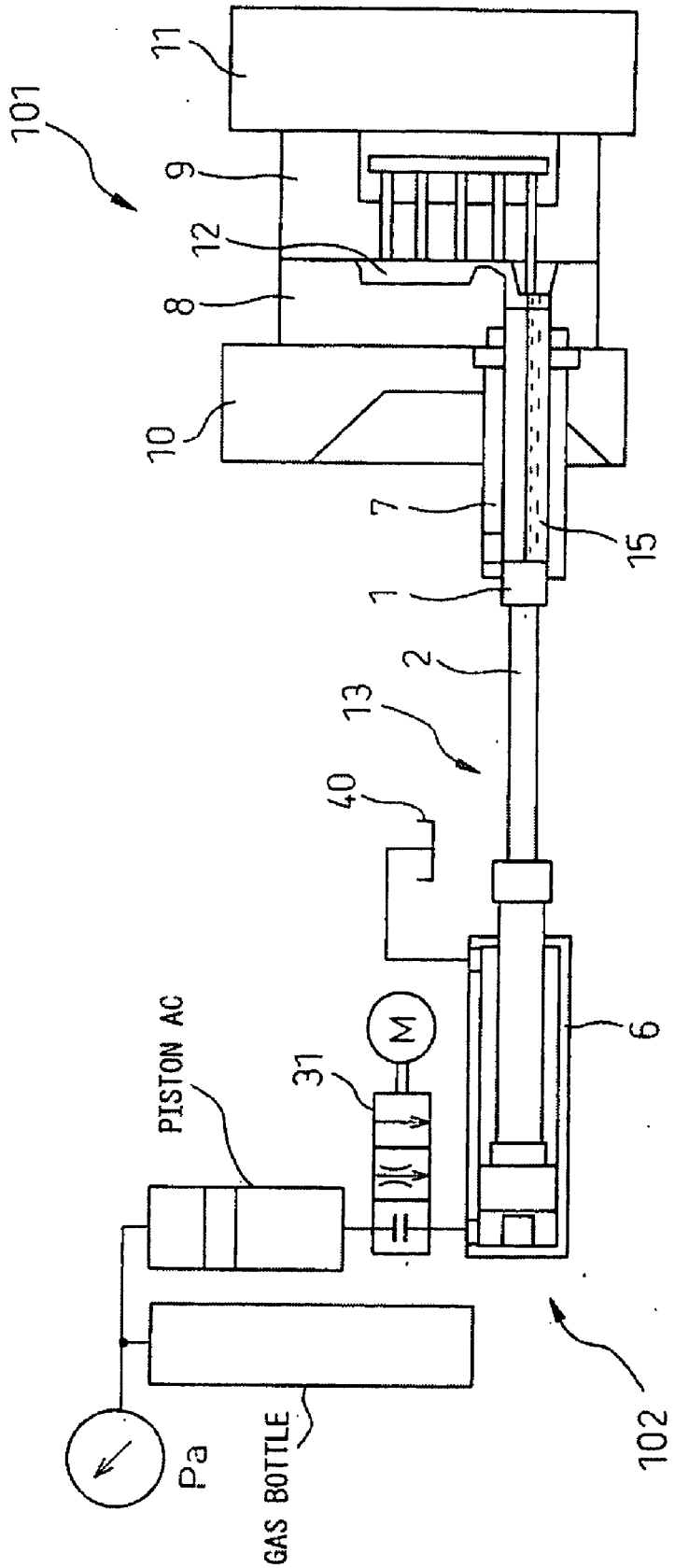

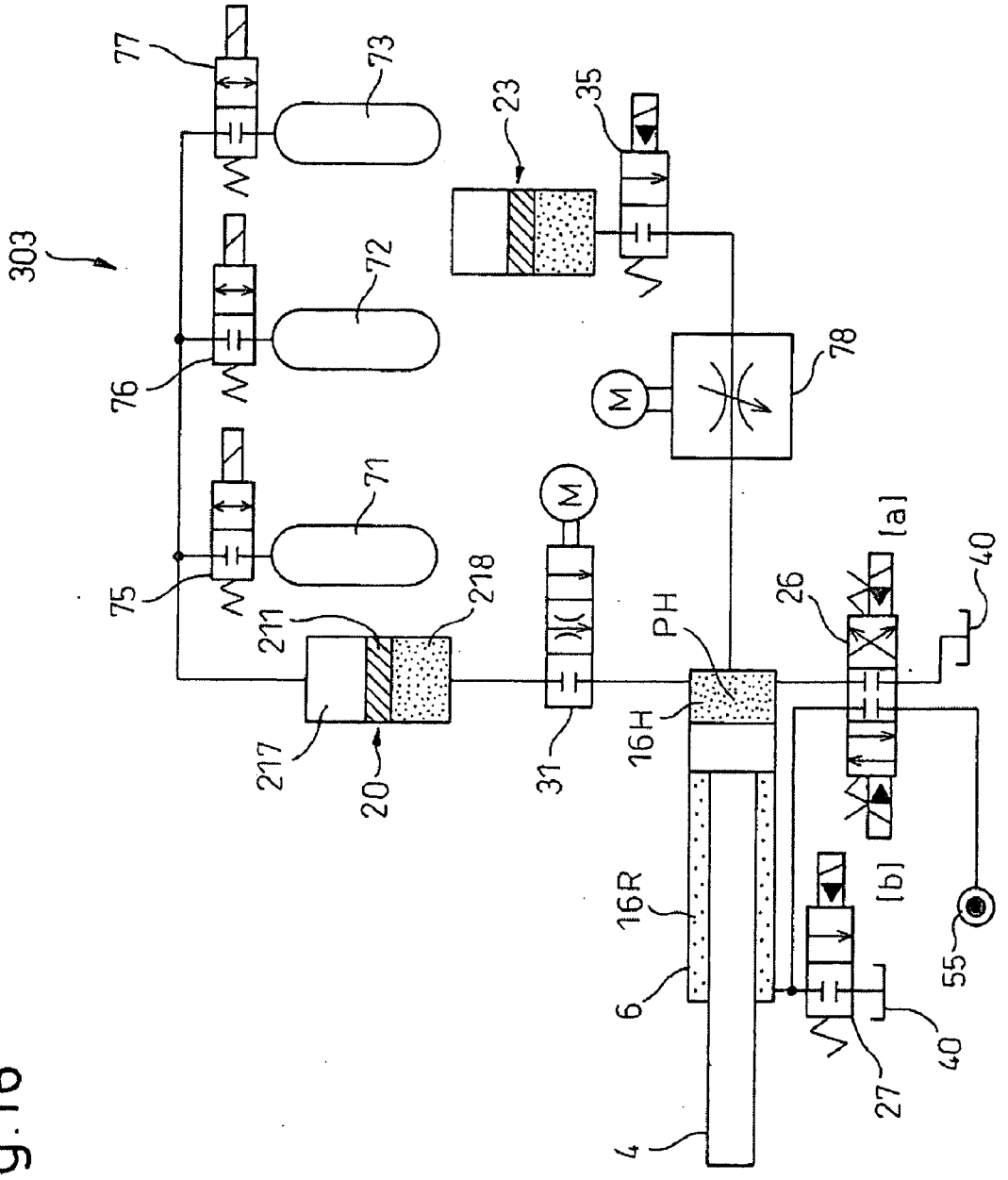
303
77
73
23
35
72
76
78
M
71
75
M
218
211
PH
26
[a]
40
217
20
31
16H
16R
6
[b]
55
40
27
4

Fig.16

Fig.17

INJECTION ACC (20)	VALVE 75 10	VALVE 76 20	VALVE 77 40	GAS AMOUNT (L)
10	OFF	OFF	OFF	10
	ON	OFF	OFF	20
	OFF	ON	OFF	30
	ON	ON	OFF	40
	OFF	OFF	ON	50
	ON	OFF	ON	60
	OFF	ON	ON	70
	ON	ON	ON	80

PISTON DIAMETER 150mm
FAST STROKE 200mm
ACC CHARGE PRESSURE 18.6MPa (190kg/cm^2)

Fig.18

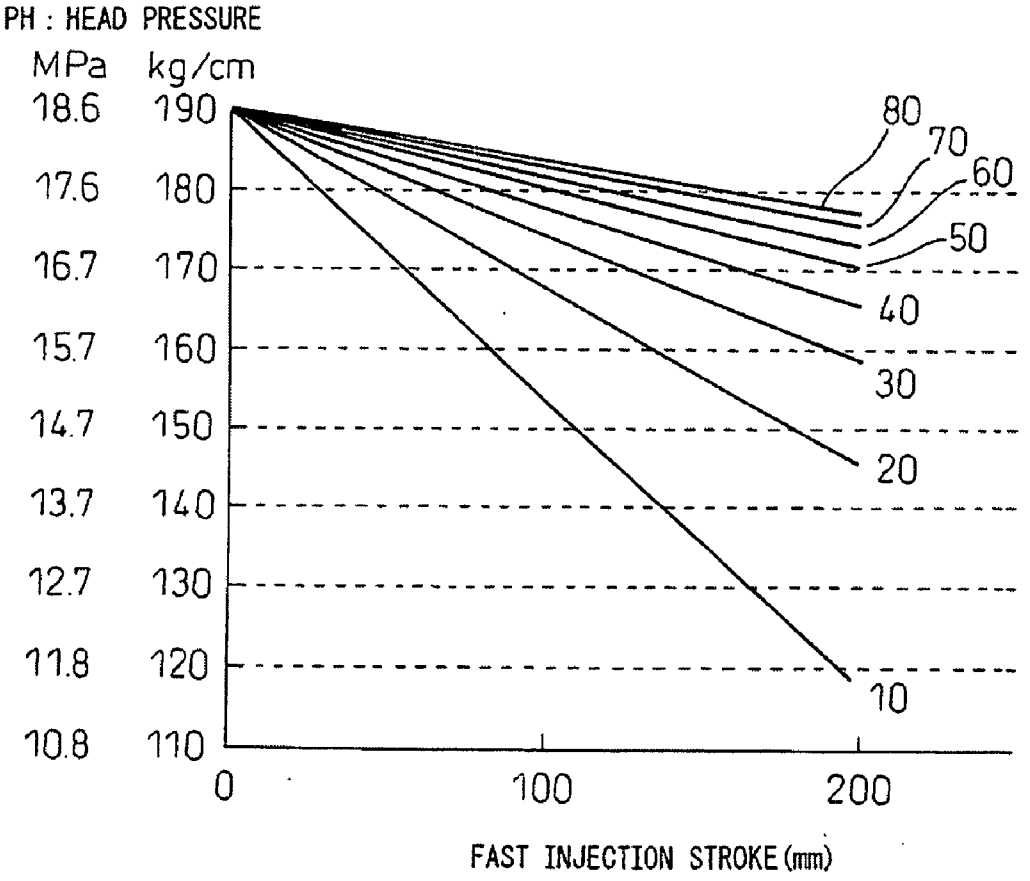
PH : HEAD PRESSURE
MPa
kg/cm
18.6
190
17.6
180
16.7
170
15.7
160
14.7
150
13.7
140
12.7
130
11.8
120
10.8
110
80
70
60
50
40
30
20
10
0
100
200
FAST INJECTION STROKE (mm)

Fig. 19

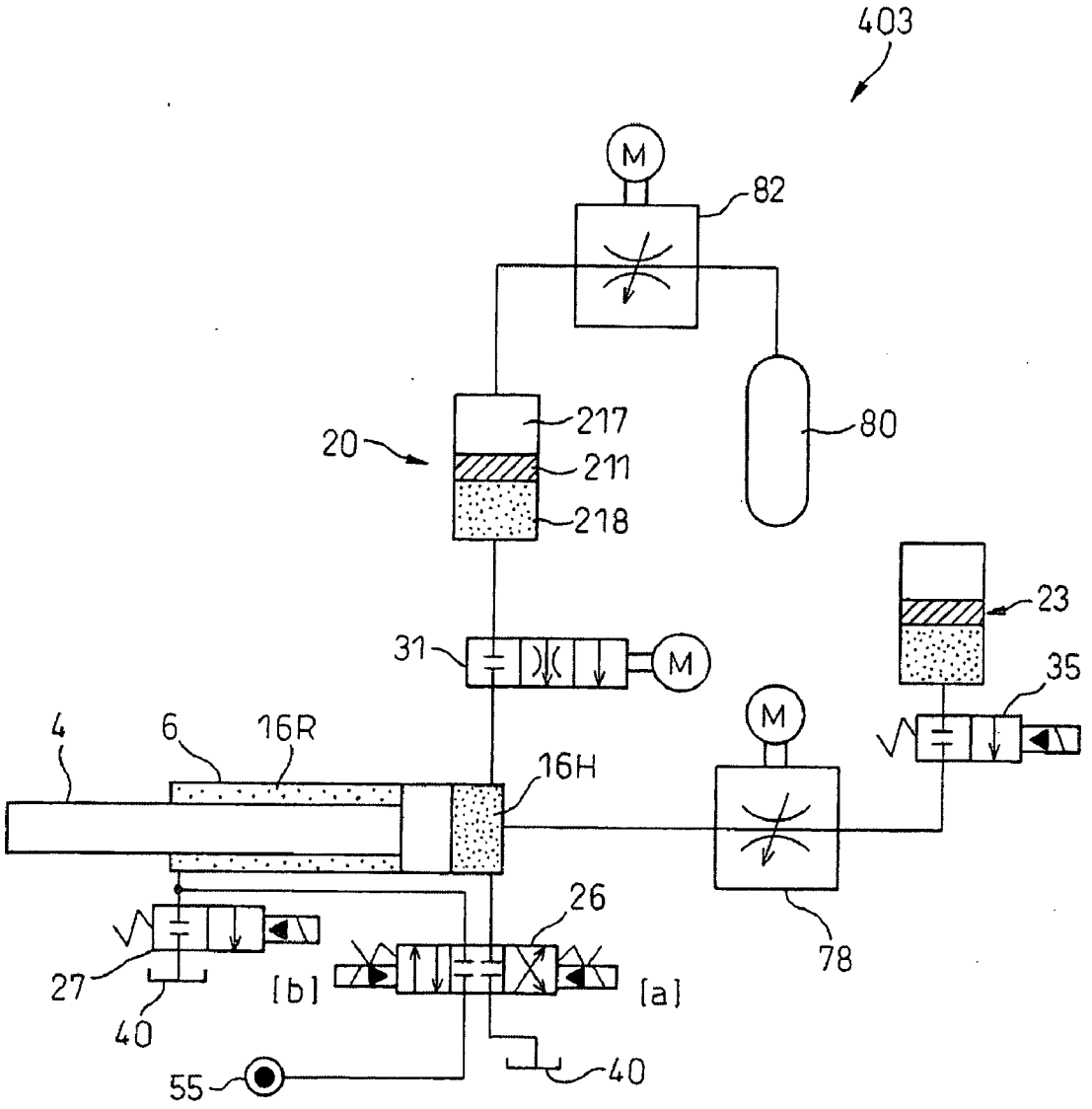

Fig. 20

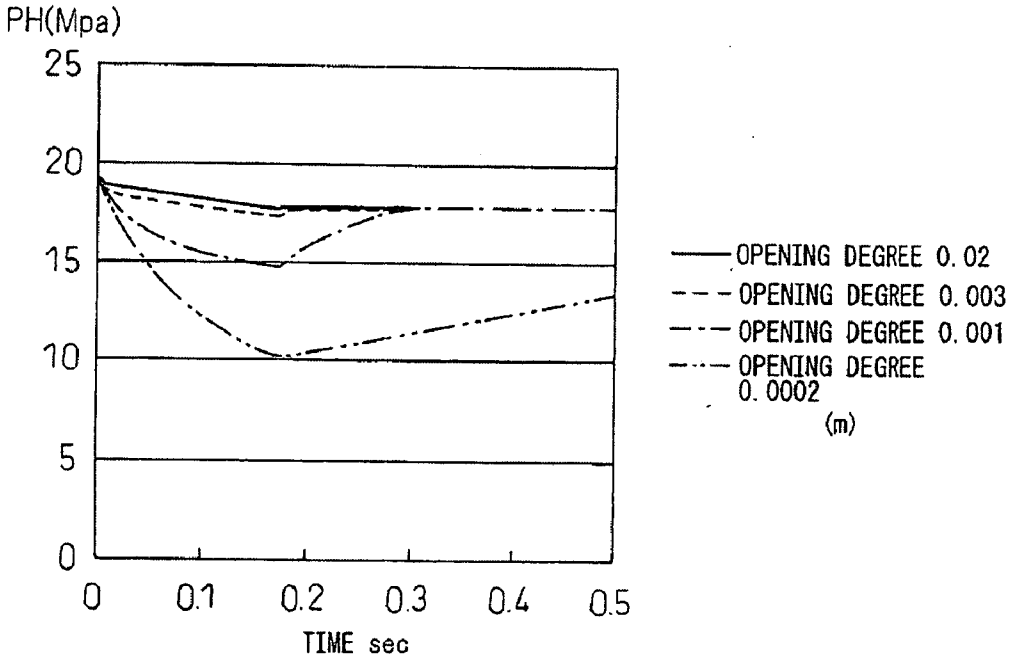
PH(Mpa)
25
20
15
10
5
0
0
0.1
0.2
0.3
0.4
0.5
TIME sec
OPENING DEGREE 0.02
OPENING DEGREE 0.003
OPENING DEGREE 0.001
OPENING DEGREE 0.0002
(m)

Fig. 21

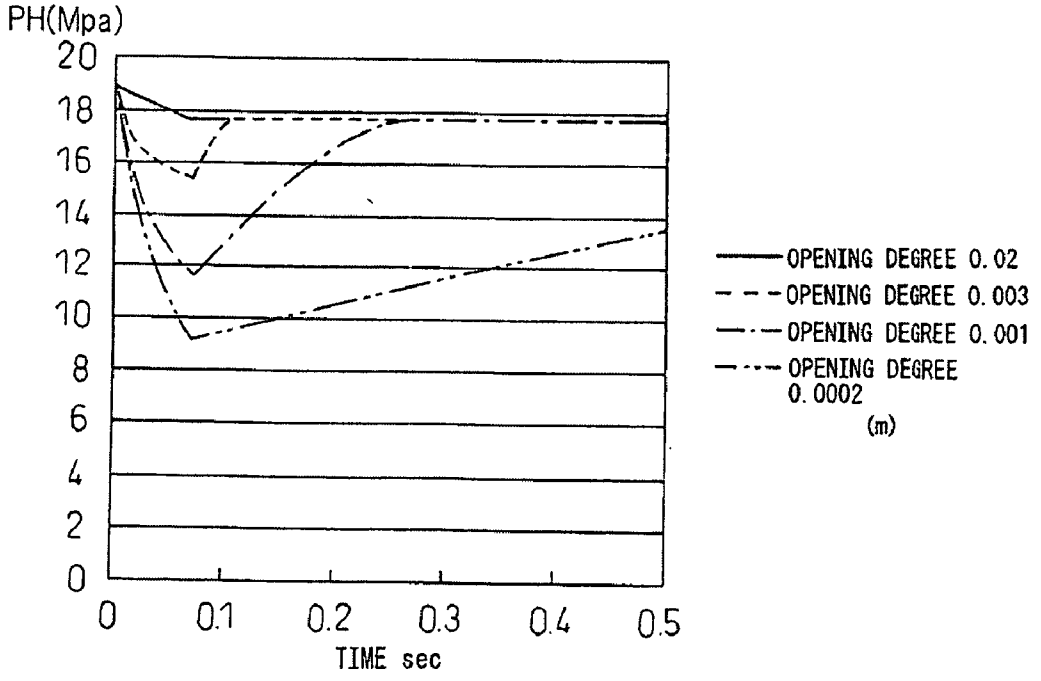
PH(Mpa)
20
18
16
14
12
10
8
6
4
2
0
0
0.1
0.2
0.3
0.4
0.5
TIME sec
OPENING DEGREE 0.02
OPENING DEGREE 0.003
OPENING DEGREE 0.001
OPENING DEGREE 0.0002
(m)

Fig. 22

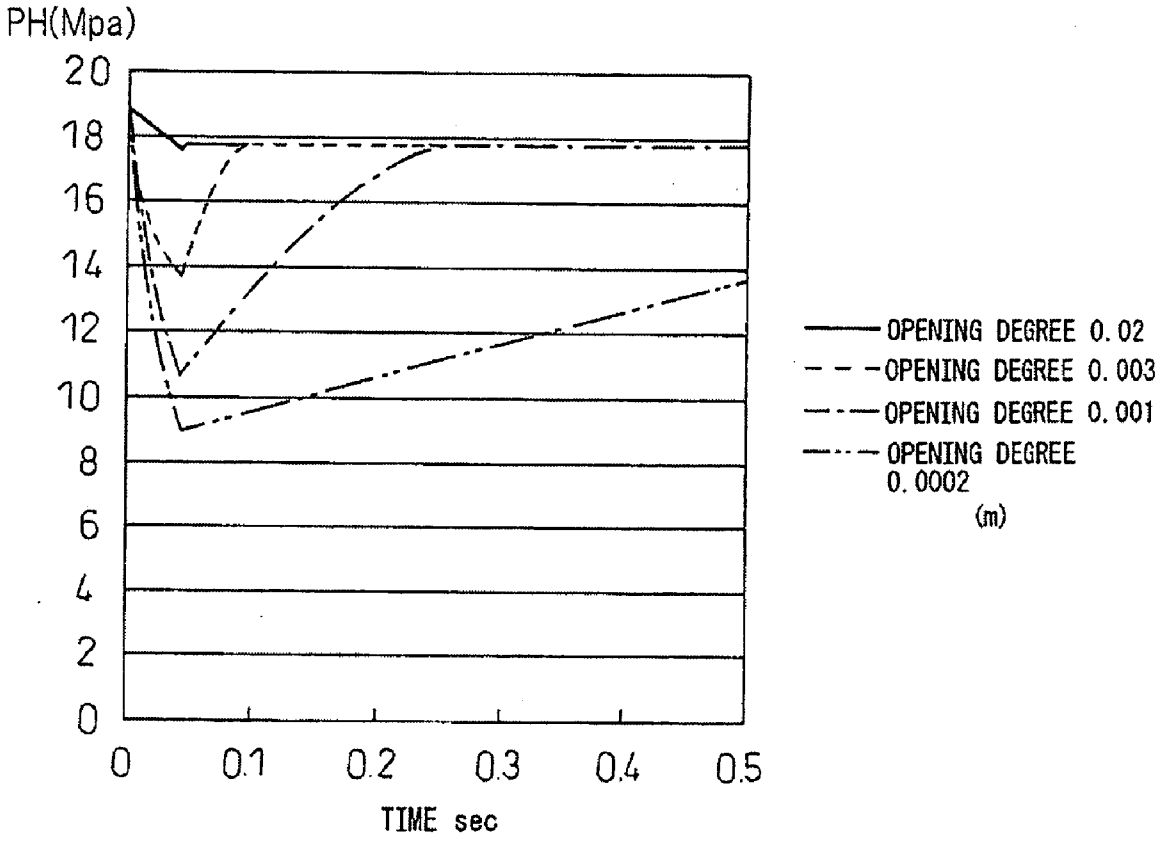
PH(Mpa)
20
18
16
14
12
10
8
6
4
2
0
0
0.1
0.2
0.3
0.4
0.5
TIME sec
OPENING DEGREE 0.02
OPENING DEGREE 0.003
OPENING DEGREE 0.001
OPENING DEGREE 0.0002
(m)

Fig.23A

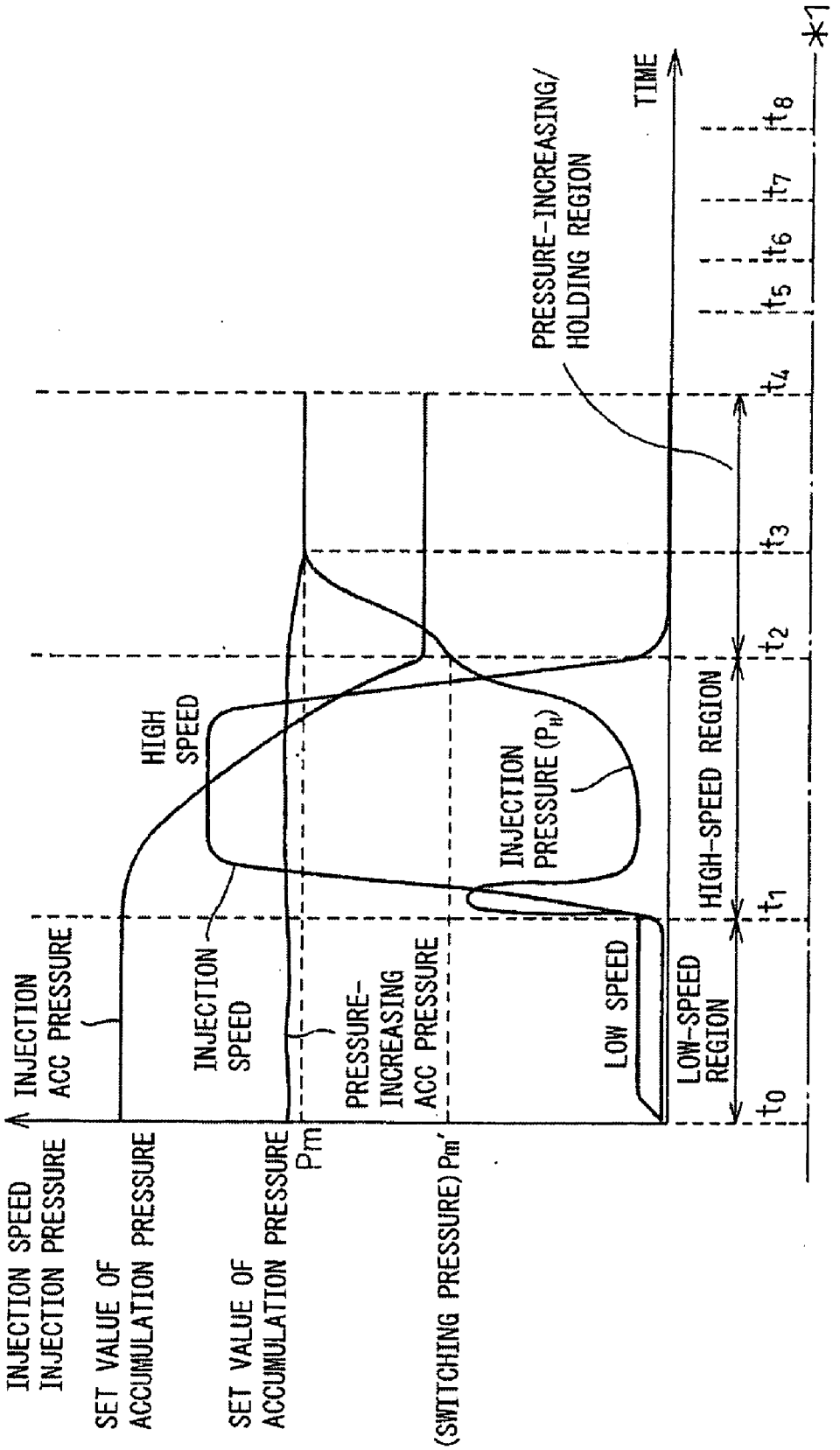
INJECTION SPEED
INJECTION PRESSURE
SET VALUE OF ACCUMULATION PRESSURE
SET VALUE OF ACCUMULATION PRESSURE
(SWITCHING PRESSURE) Pm'
Pm
INJECTION ACC PRESSURE
INJECTION SPEED
PRESSURE-INCREASING ACC PRESSURE
HIGH SPEED
LOW SPEED
INJECTION PRESSURE (P_H)
PRESSURE-INCREASING/ HOLDING REGION
LOW-SPEED REGION
HIGH-SPEED REGION
TIME
t_0
t_1
t_2
t_3
t_4
t_5
t_6
t_7
t_8
*1

Fig.23B

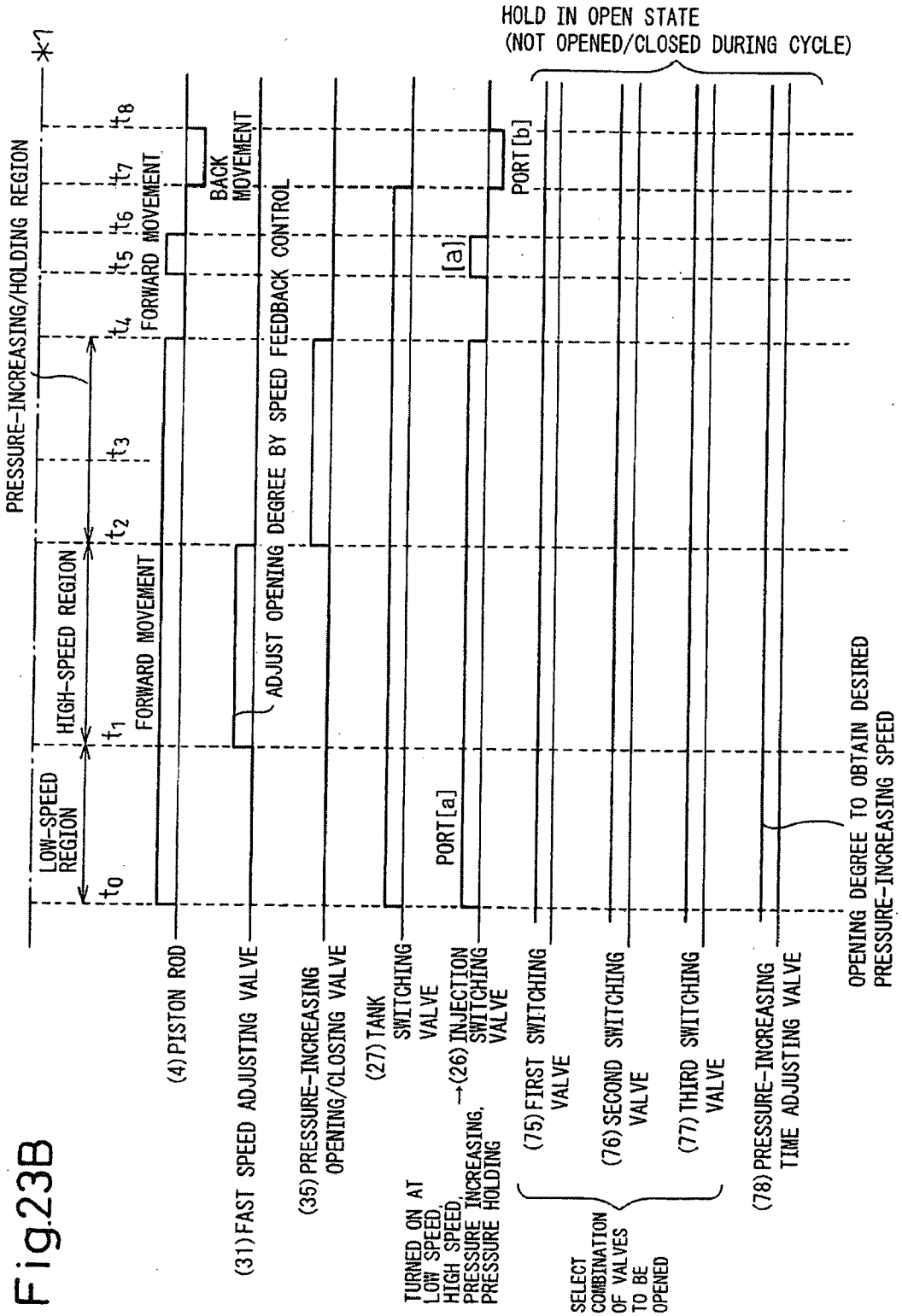
PRESSURE-INCREASING/HOLDING REGION
*1
LOW-SPEED REGION
HIGH-SPEED REGION
t0
t1
t2
t3
t4
t5
t6
t7
t8
FORWARD MOVEMENT
BACK MOVEMENT
HOLD IN OPEN STATE
(NOT OPENED/CLOSED DURING CYCLE)
(4) PISTON ROD
(31) FAST SPEED ADJUSTING VALVE
ADJUST OPENING DEGREE BY SPEED FEEDBACK CONTROL
(35) PRESSURE-INCREASING OPENING/CLOSING VALVE
(27) TANK SWITCHING VALVE
TURNED ON AT LOW SPEED, HIGH SPEED, PRESSURE INCREASING, PRESSURE HOLDING
PORT[a]
[a]
→(26) INJECTION SWITCHING VALVE
PORT[b]
(75) FIRST SWITCHING VALVE
(76) SECOND SWITCHING VALVE
(77) THIRD SWITCHING VALVE
SELECT COMBINATION OF VALVES TO BE OPENED
(78) PRESSURE-INCREASING TIME ADJUSTING VALVE
OPENING DEGREE TO OBTAIN DESIRED PRESSURE-INCREASING SPEED

Fig.24A

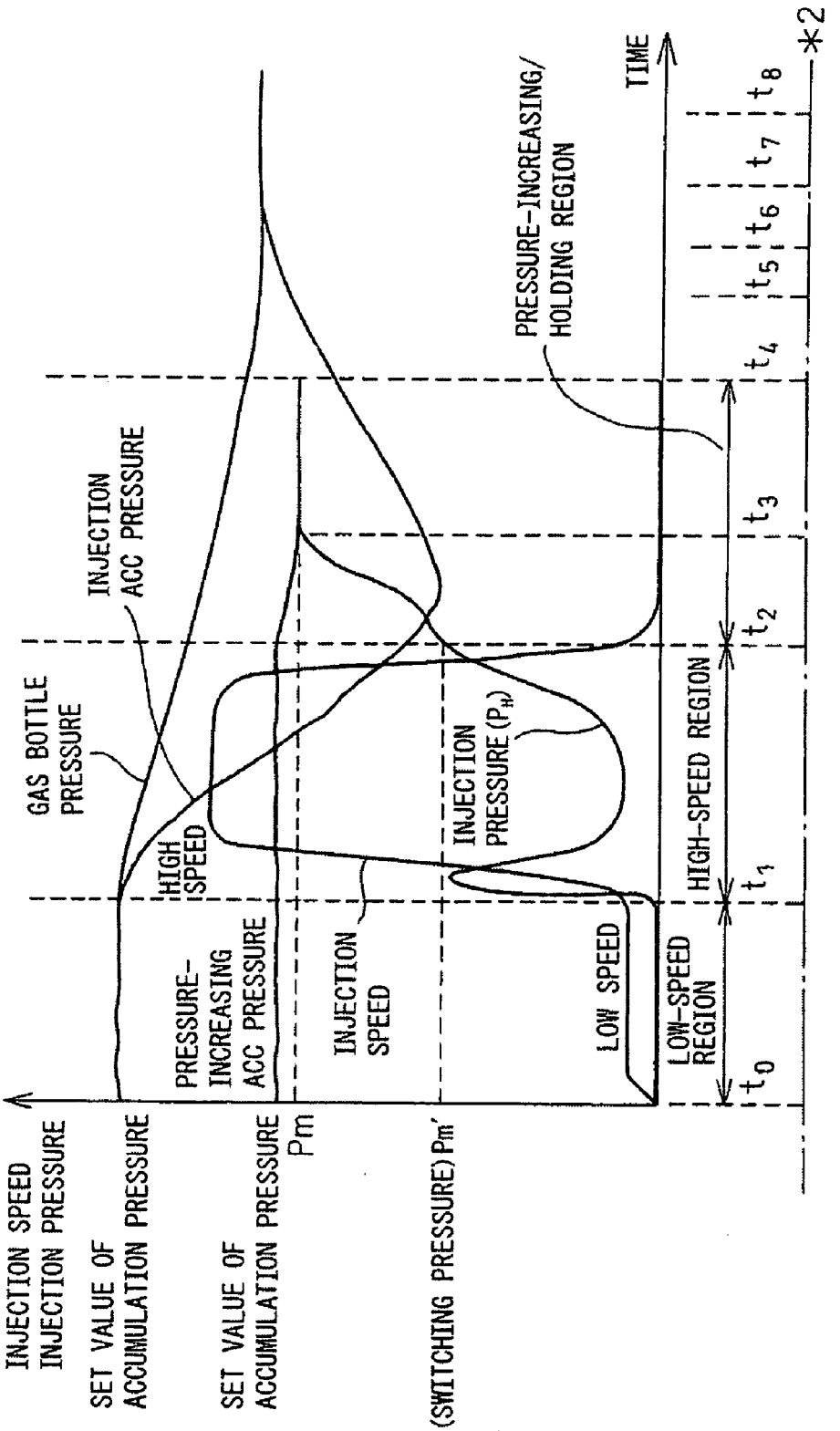
INJECTION SPEED
INJECTION PRESSURE
SET VALUE OF ACCUMULATION PRESSURE
SET VALUE OF ACCUMULATION PRESSURE Pm
(SWITCHING PRESSURE) Pm'
GAS BOTTLE PRESSURE
INJECTION ACC PRESSURE
HIGH SPEED
PRESSURE-INCREASING ACC PRESSURE
INJECTION SPEED
INJECTION PRESSURE (Pi)
LOW SPEED
PRESSURE-INCREASING/ HOLDING REGION
TIME
LOW-SPEED REGION
HIGH-SPEED REGION
t0
t1
t2
t3
t4
t5
t6
t7
t8
*2

Fig.24B

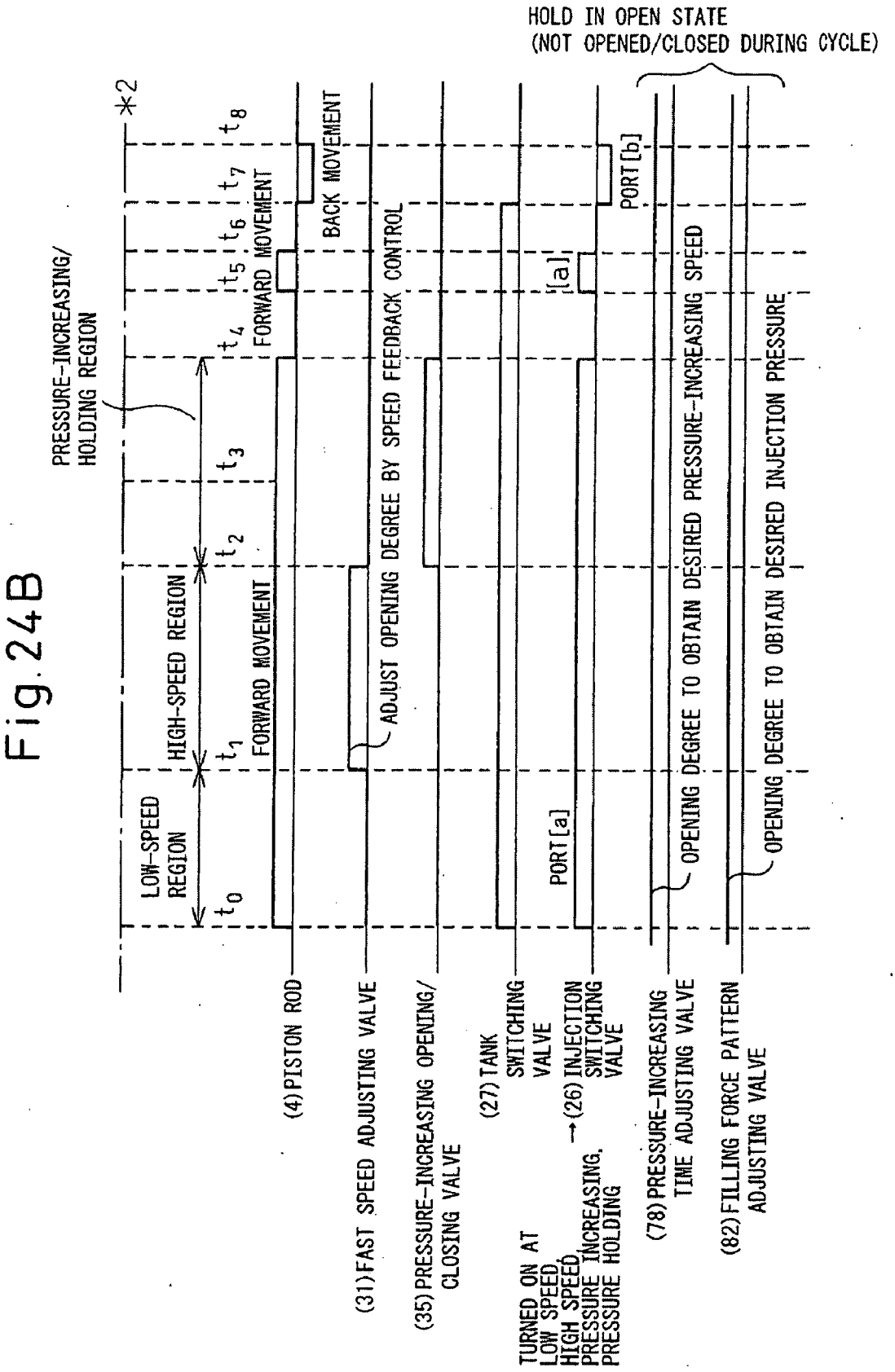
HOLD IN OPEN STATE
(NOT OPENED/CLOSED DURING CYCLE)
PRESSURE-INCREASING/
HOLDING REGION
*2
LOW-SPEED
REGION
HIGH-SPEED REGION
t_0
t_1
t_2
t_3
t_4
t_5
t_6
t_7
t_8
FORWARD MOVEMENT
FORWARD MOVEMENT
BACK MOVEMENT
(4) PISTON ROD
(31) FAST SPEED ADJUSTING VALVE
ADJUST OPENING DEGREE BY SPEED FEEDBACK CONTROL
(35) PRESSURE-INCREASING OPENING/
CLOSING VALVE
(27) TANK
SWITCHING
VALVE
TURNED ON AT
LOW SPEED,
HIGH SPEED,
PRESSURE INCREASING,
PRESSURE HOLDING
PORT[a]
[a]
→(26) INJECTION
SWITCHING
VALVE
PORT[b]
(78) PRESSURE-INCREASING
TIME ADJUSTING VALVE
OPENING DEGREE TO OBTAIN DESIRED PRESSURE-INCREASING SPEED
(82) FILLING FORCE PATTERN
ADJUSTING VALVE
OPENING DEGREE TO OBTAIN DESIRED INJECTION PRESSURE

Fig. 25

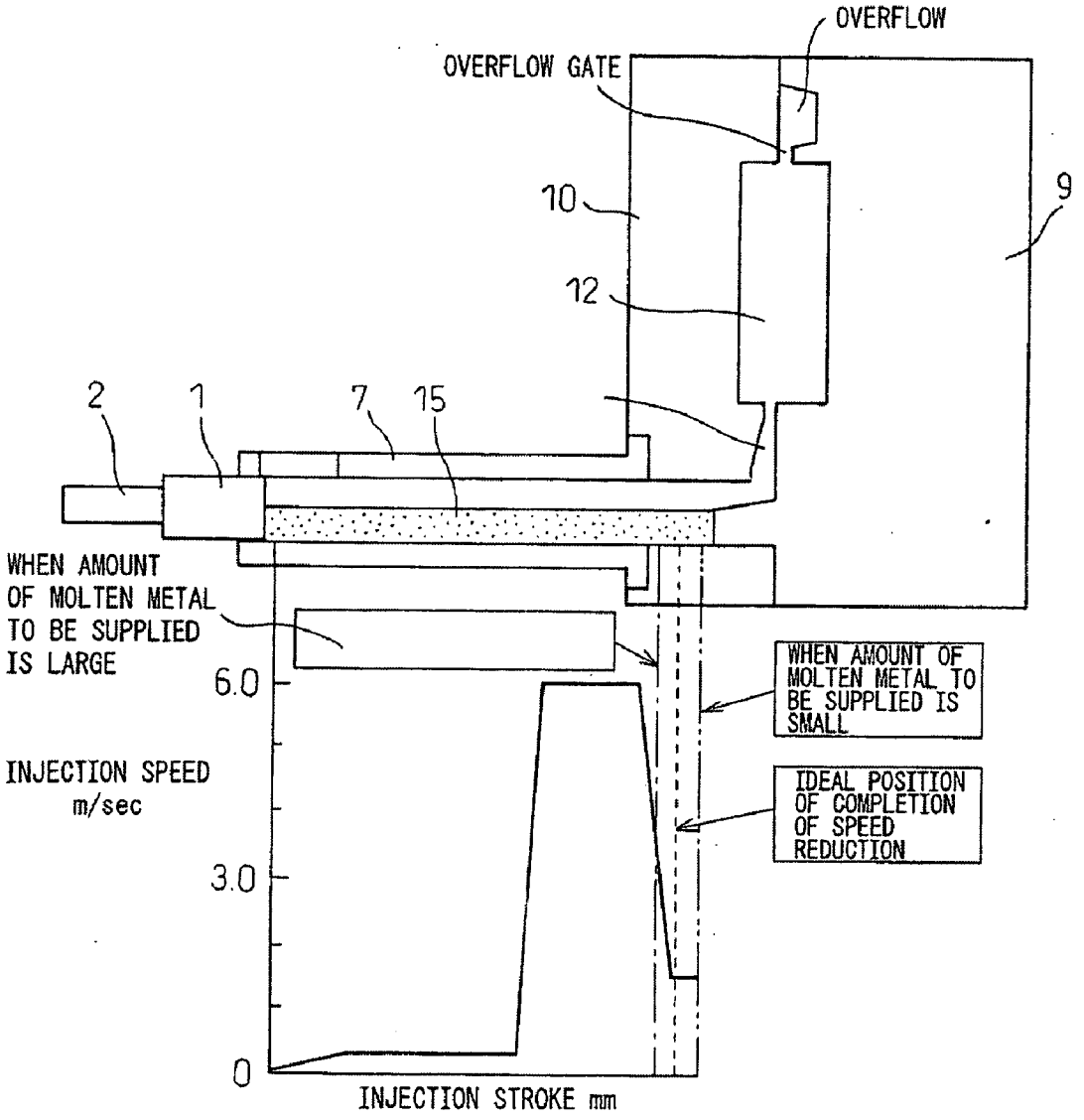
OVERFLOW
OVERFLOW GATE
10
9
12
2
1
7
15
WHEN AMOUNT OF MOLTEN METAL TO BE SUPPLIED IS LARGE
WHEN AMOUNT OF MOLTEN METAL TO BE SUPPLIED IS SMALL
IDEAL POSITION OF COMPLETION OF SPEED REDUCTION
INJECTION SPEED m/sec
6.0
3.0
0
INJECTION STROKE mm

Fig. 26

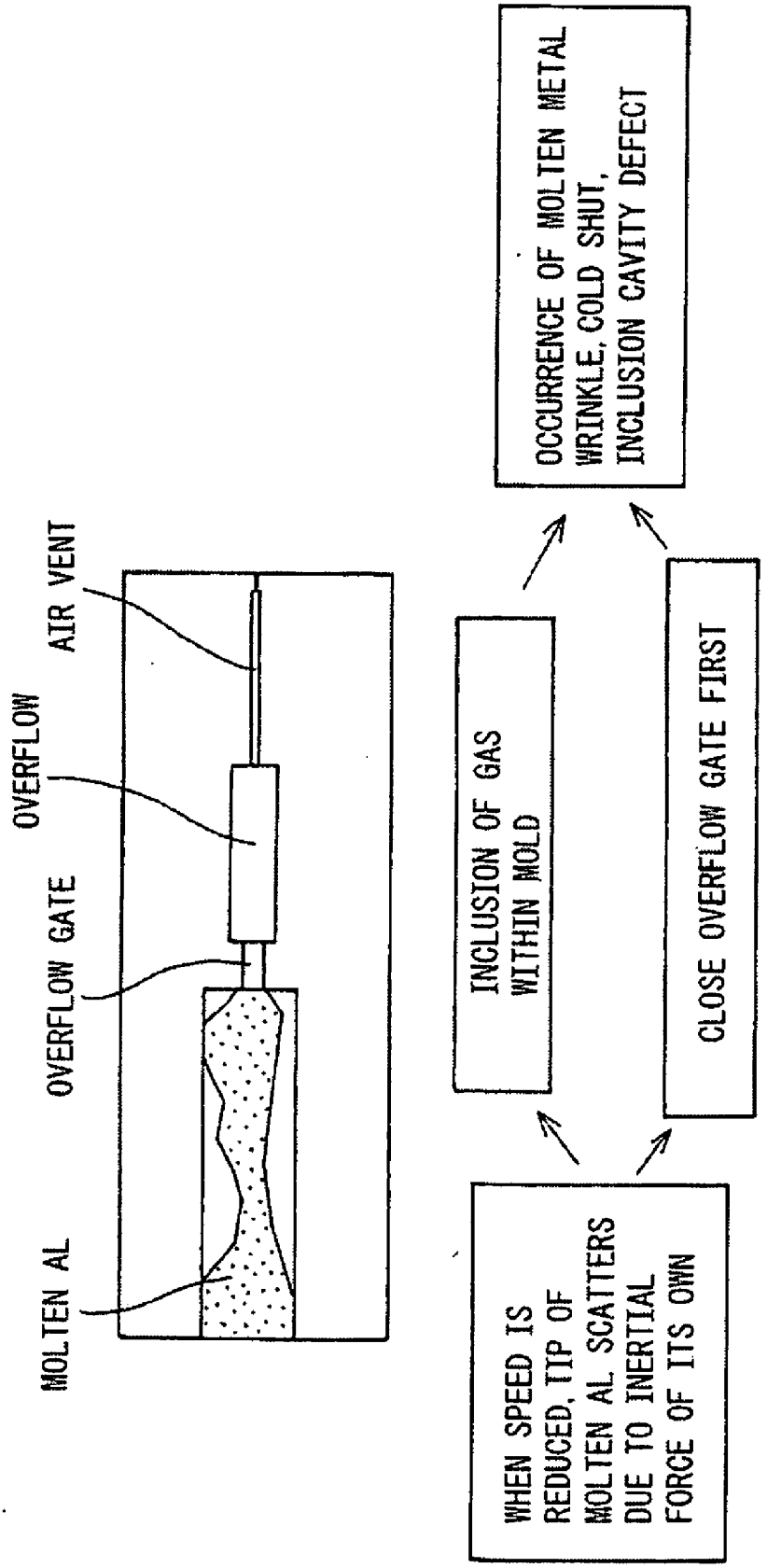
MOLTEN AL
OVERFLOW GATE
OVERFLOW
AIR VENT
WHEN SPEED IS REDUCED, TIP OF MOLTEN AL SCATTERS DUE TO INERTIAL FORCE OF ITS OWN
INCLUSION OF GAS WITHIN MOLD
CLOSE OVERFLOW GATE FIRST
OCCURRENCE OF MOLTEN METAL WRINKLE, COLD SHUT, INCLUSION CAVITY DEFECT

DIE CASTING MACHINE AND DIE CASTING METHOD

CROSS-REFERENCE TO RELATED APPLICATIONS

[0001] The present invention claims patent based on the priority of Japanese Patent Application No. 2006-290165 filed on Oct. 25, 2006 and Japanese Patent Application No. 2007-229335 filed on Sep. 4, 2007 and these contents are incorporated herein as reference and continued in the subject application.

BACKGROUND OF THE INVENTION

[0002] 1. Field of the Invention

[0003] The present invention relates to a die casting machine and a die casting method and, more particularly, to a fast (high-speed) injection metal die casting machine and a die casting method.

[0004] 2. Description of the Related Art

[0005] A die casting method and a die casting machine using a light metal material, such as aluminum, for molding are widely used in various fields, such as the automobile industry and die casting manufacturing. In the die casting method, a product having a predetermined shape is molded by pumping under pressure molten metal supplied into a plunger sleeve through a molten metal supply inlet by a plunger tip to fill a mold cavity (hollow) therewith. A light metal, such as aluminum alloy, has a shorter solidification time compared to that of a synthesis resin, and therefore, an increase in injection speed becomes important. Further, from the standpoint of productivity, an increase in injection speed has been in demand.

[0006] FIG. **1** shows an illustrative diagram of a general die casting machine **100** for light metal, such as aluminum. In the explanation of the present invention to be given later, the configuration of the die casting machine **100** is explained in detail, and therefore, only important items are explained here. The die casting machine **100** for light metal is generally a hydraulic type, in which hydraulic oil is supplied to the head side of an injection cylinder **102** to drive a piston rod **4** and press molten aluminum (AL) **15** stored in a plunger sleeve **7** via a plunger rod **2** with a plunger tip **1**, and thereby, a cavity **12** within a mold **8**, **9** is filled therewith by injection molding.

[0007] In recent die casting, it is reported that gas enclosing blowholes are eliminated by removing gas in a mold at a high vacuum (about 5 kPa) and thus the injection speed is increased, and by shortening the filling time to reduce the number of blowholes (cavities) that occur internally, the mechanical property of a molded product by die casting is improved remarkably. For the latest die casting machine, there is an increasing demand to improve the quality of a molded product by shortening the filling time to minimize the reduction in temperature of molten metal. In this case, the injection speed is 5 to 7 m/sec, about 2.5 times the normal speed, which is 2 to 3 m/sec (the numerical values of the above speeds are those in the state where molten metal is pushed into a mold at a speed at actual molding (actual injection speed)), however, in the actual molding site, if the speed is increased to this level, surge pressure occurs in molten aluminum (AL) because of the impact when injection filling is completed, and therefore, the mold clamping device breaks down and the mold opens slightly and thus a burr occurs (molten metal erupted from the slit of the mold solidifies into a burr). Even more so, spouting of molten metal occurs, and either way, there arises a problem that "continuation of production is no longer possible".

[0008] Because of this, various methods for reducing surge pressure have been proposed. However, each proposal has a problem. Surge pressure occurs as a combination of that which occurs due to the inertial force of the plunger tip **1**, the plunger rod **2**, an injection coupling **3**, the piston rod **4**, and a piston head **5** that are traveling at a high speed shown in FIG. **1** and that which occurs due to the inertia of hydraulic oil that flows into a cylinder **6** at a high speed. A graph of the change of the injection speed and surge pressure with time (or injection stroke) is shown in FIG. **12**. In FIG. **12**, a first surge pressure that appears first results from the plunger tip **1**, the plunger rod **2**, the piston rod **4**, and the piston **5** and this surge pressure affects most the occurrence of burr.

[0009] As a method for reducing the first surge pressure, it is conceived basically (1) to reduce the weight of a moving body and (2) to reduce speed before filling is completed. This method is already put to practical use currently and as the method (2) to reduce speed before filling is completed, the following two methods are adopted. A method frequently used is (2-1) to hydraulically apply breaks to the plunger tip **1** (that is, the piston rod **4**) when a scheduled position is reached by detecting the injection stroke, however, in this method, because of the variations in the amount of molten aluminum (AL) to be supplied into the plunger sleeve **7** (in general, there are variations of certain level in the amount of molten metal to be supplied to and stored in the plunger sleeve **7** resulting from the reason relating to the precision of a supply mechanism), there are variations in the position at which the injection speed of molten metal into the mold is reduced and this causes the defect in quality, such as the occurrence of cold shut/molten metal wrinkle of a molded product, and this is a big problem for a product that strictly prevents such defects. That is, when applying breaks by detecting the injection stroke (i.e., the position of the plunger tip **1**), if the amount of molten metal in the sleeve **7** is large, the increasing rate of the pressure of molten metal is high and surge pressure occurs earlier before breaking is activated (the braking timing is delayed relatively), and therefore, the leak of molten metal occurs and a burr occurs. On the other hand, if the amount of molten metal within the sleeve **7** is small, breaking is activated before molten metal is sufficiently distributed in the mold cavity (the breaking timing is advanced relatively), and therefore, a defect that molten metal is insufficient may occur.

[0010] The other method is to (2-2) reduce the power of the injection cylinder at a fast (high-speed) filling step and reduce the speed spontaneously according to the increase in resistance of the flow of molten metal in the mold that occurs during filling. In this case, the influence of the variations in the amount of molten metal is removed and the defect of quality, such as the occurrence of cold shut/molten metal wrinkle, in the molded product in the above-described method (**2-1**) no longer occurs. However, the following problem occurs. If power at a fast filling step is reduced, the fast pressure-raising time is lengthened, and therefore, there arises a problem that a fast peed cannot be obtained. An example is shown by the dotted line in FIG. **14**. FIG. **15** shows the outline of a device used in a test to obtain the graph in FIG. **14**. This device comprises a mold **101** and the injection cylinder **102** similar to those shown in FIG. **1** and further comprising a piston ACC (accumulator), a gas bottle, a valve **31** similar to a seventh valve, etc., similar to those in FIG. **2**. In

the example in FIG. **14**, the pressure of the accumulator (ACC) is reduced from 14 MPa (normal pressure) to 9 MPa. Due to this, the fast pressure-raising time from 0.2 to 3.2 m/sec is 15 msec at 14 MPa (solid line), however, at 9 MPa (dotted line), it is 22 msec, that is 7 msec longer. Further, in the molding test under this condition (9 MPa), a significant burr still occurs. However, if the pressure is further reduced, the pressure-raising time is lengthened and the fast speed is reduced and the defect in the run of molten metal (misrun: molten metal does not reach any part in the cavity) occurs, and therefore, this condition is a compromise one in the actual molding test. As for the condition of 9 MPa, if the fast pressure-raising and the fast (high) speed operation are not affected, it is necessary to reduce the fast injection output to remove the burr and with this method to reduce pressure (i.e., power), no satisfactory molding result could be obtained in the molding test.

[0011] In order to exhibit the fast actual injection speed performance, a performance of 10 m/sec or more is required for no-load injection (no molten metal is put into the sleeve and there is no flow resistance of molten metal). What is severe is the need to reach this speed within a slight distance of 50 mm, and therefore, the injection cylinder and the hydraulic circuit are configured so that a high pressure is generated at the fast speed-raising step. Then, if filling is completed without any action taken, the pressure of molten metal in the cavity sharply increases (surge pressure occurs) when the filling is completed and the mold opens, spouting of molten metal occurs, and a very dangerous state where a molding operation is no longer possible is brought about.

[0012] In order to prevent this, a method for forcedly reduce the speed of the injection piston immediately before the completion of filling is adopted (FIG. **25**) (in contrast to this, a machine with a fast injection speed of 2 to 3 m/sec as specifications has a speed not so high and a low pressure at a fast filling step, and therefore, the speed is reduced spontaneously while balancing with the increasing fluid resistance of molten metal in the mold, the impact value when filling is completed is reduced, and burr and spouting of molten metal are unlikely to occur). A machine having a fast speed of 10 m/sec or more as specifications at a no-load injection step is referred to as an ultrafast machine, and molding by an ultrafast machine has a difficult problem. The problem is that a high precision is required for the amount of molten metal to be supplied by a molten metal supplier and if the amount of molten metal is excessive, filling is completed before the speed is reduced sufficiently and a surge pressure occurs, and if the amount of molten metal is insufficient, scattering (or splash) of tip of molten metal occurs, discontinuous filling results, and the defect of cold shut occurs, and what is worse, gas inclusion defect occurs. The mechanism of the occurrence of the defect when the amount of molten metal is insufficient and the reduction in speed is put into effect too early is illustrated in FIG. **26**. However, it is very difficult to improve the precision of molten metal supply of a supplier and a method for solving the problem is hard to find.

[0013] The graph in FIG. **25** shows how the position of the plunger tip when filling is completed changes depending on the amount of molten metal. The position at the time of completion when the amount of molten metal is proper (as planned) is shown as the "ideal position at the time of completion" (broken line). When the amount of molten metal is excessive, the position at the time of completion becomes more distant from the gate **6**, and therefore, is the position shown by the alternate long and short dash line. When the amount of molten metal is insufficient, the position at the time of completion comes nearer to the gate **6**, and therefore, is the position shown by the alternate long and two dashes line. As described above, the position at the time of completion varies depending on the amount of molten metal, and therefore, there arises a problem that surge pressure occurs or scattering of tip of molten metal occurs. On the other hand, it is difficult to improve the precision of molten metal supply of a supplier and also to grasp the amount of molten metal, and therefore, it is also difficult to adjust the position at which reduction in speed is commenced by grasping the amount of molten metal.

[0014] For a die casting machine, there has been made a proposal that the weight of a moving body is reduced (for example, refer to patent document 2), however, the proposal has not disclosed the proposal of the present invention. There has been made another proposal (refer to patent document 1), however, with this proposal, it is not possible to suppress the occurrence of surge pressure and defect of product quality because an error is produced at the position of the commencement of reduction in speed of the injection rod when there are variations in the amount of molten metal stored in the plunger sleeve as described above.

[0015] [Patent document 1] Japanese Unexamined Patent Publication (Kokai) No. 2001-300714

[0016] [Patent document 2] Japanese Unexamined Patent Publication (Kokai) No. 2004-216432

SUMMARY OF THE INVENTION

[0017] The present invention has been developed the above-described circumstances being taken into account and an object thereof is to suppress the occurrence of surge pressure, prevent the occurrence of burr and spouting of molten metal or scattering (or splash) of tip of molten metal, and further minimize the variations in the quality of molded product on site in a die casting method or a die casting machine capable of fast (high-speed) injection molding.

[0018] In order to achieve the above-described object, a die casting machine according to a first aspect of the present invention comprises a mold (**101**) that cast-molds a product, an injection cylinder (**102**) for injecting molten metal (**15**) to the mold (**101**), and a hydraulic device (**103**, **203**) for pressing under high pressure the injection cylinder (**102**). The hydraulic device (**103**, **203**) comprises a piston accumulator (ACC) (**20**) that supplies hydraulic oil, which presses under pressure an piston (**13**) of the injection cylinder (**102**), to the injection cylinder (**102**) and an injection cylinder inlet valve (**31**) for releasing/closing the flow of hydraulic oil from the piston accumulator (ACC) (**20**) to the injection cylinder (**102**). The piston accumulator (ACC) (**20**) comprises a high pressure fast pressure-raising piston accumulator (ACC-B) (**22**, **322**) and a low-pressure injection piston accumulator (ACC-A) (**21**, **321**).

[0019] With such a configuration, it is possible to suppress the occurrence of surge pressure of molten metal in the cavity of a mold, prevent the occurrence of burr and spouting of molten metal, and further minimize the variations in the quality of molded product on site in a die casting machine capable of fast injection molding by activating the piston of the injection cylinder under high pressure and switching the drive to a low-pressure drive at a predetermined stroke of the piston, even if there are variations in the amount of molten metal in a plunger sleeve of the mold.

[0020] In a second aspect of the present invention, according to the above-mentioned first aspect, the piston (**13**) of the injection cylinder (**102**) is first pressed under pressure by a high hydraulic oil pressure supplied by the fast pressure-raising piston accumulator (ACC-B) (**22**, **322**) and operates at a fast injection speed, and then is pressed under pressure by a low hydraulic oil pressure supplied by the injection piston accumulator (ACC-A) (**21**, **321**) and operates when the hydraulic oil pressure supplied by the fast pressure-raising piston accumulator (ACC-B) (**22**, **322**) is shut off.

[0021] According to the present aspect, it is possible to suppress the occurrence of surge pressure by switching the pressing force to the low-pressure pressing force with a proper timing rather than continuing to press under high pressure the piston of the injection cylinder.

[0022] In a third aspect of the present invention, according to either the above-mentioned first or second aspect, the fast pressure-raising piston accumulator (ACC-B) (**22**) comprises an ACC-B piston (**221**) that separates/forms a gas chamber (**217**) and a hydraulic oil chamber (**228**) within the fast pressure-raising piston accumulator (ACC-B) and reciprocates therein and a projection part (**222**) fixed on the ACC-B piston (**221**) and extending up to the side of the hydraulic oil chamber, and penetrating and extending through an end wall (**226**) on the side of the hydraulic oil chamber of the fast pressure-raising piston accumulator (ACC-B). The injection piston accumulator (ACC-A) (**21**) comprises an ACC-A piston (**211**) that separates/forms a gas chamber (**217**) and a hydraulic oil chamber (**218**) within the injection piston accumulator (ACC-A) and reciprocates therein. The projection part (**222**) is capable of penetrating through an end wall (**216**) on the side of the gas chamber of the injection piston accumulator (ACC-A) (**21**), invading the gas chamber (**217**) of the injection piston accumulator (ACC-A) (**21**), and detachably coming into contact with and pressing under pressure the ACC-A piston (**211**).

[0023] According to the present aspect, by using the piston accumulator (ACC) having the special structure as described above, it is possible to avoid the discontinuity of speed at a fast raising step, which is produced when a large-sized valve and check valve are opened/closed etc., and ensure the continuity, and therefore, a molded product of high quality can be manufactured. Further, the piston accumulator (ACC) having the special structure makes the installation space compact, and therefore, its superiority can be exhibited in terms of cost.

[0024] In a fourth aspect of the present invention, according to the above-mentioned third aspect, the fast pressure-raising piston accumulator (ACC-B) (**22**) and the injection piston accumulator (ACC-A) (**21**) are formed integrally into one unit.

[0025] According to the present aspect, a configuration is provided, in which switching from the fast pressure-raising piston accumulator (ACC-B) to the injection piston accumulator (ACC-A) can be done smoothly and at the same time, a piston accumulator (ACC) consisting of the fast pressure-raising piston accumulator and the injection piston accumulator can be formed compact.

[0026] A fifth aspect of the present invention, according to any one of the first to fourth aspects, further comprises a pressure-increasing accumulator (**23**) for holding under pressure the molten metal (**15**) in the mold at a predetermined pressure for a predetermined period of time after the injection molding of the molten metal.

[0027] According to the present aspect, the configuration of the hydraulic device capable of ensuring the excellent quality of a product is further clarified.

[0028] In a sixth aspect of the present invention, according to any one of the first to fifth aspects, the injection cylinder inlet valve (**31**) is capable of adjusting the flow rate of the hydraulic oil from the piston accumulator (ACC) (**20**) to the injection cylinder (**102**).

[0029] According to the present aspect, the configuration capable of controlling the injection speed more excellently is further clarified.

[0030] A seventh aspect of the present invention, according to any one of the first to sixth aspects, further comprises a stroke sensor (**46**) for detecting a stroke of the piston (**13**) of the injection cylinder (**102**).

[0031] According to the present aspect, the configuration in which the stroke of the piston of the injection cylinder is detected with the stroke sensor in order to control the injection of the injection cylinder is further clarified.

[0032] In an eighth aspect of the present invention, according to the seventh aspect, the injection of the molten metal (**15**) is controlled by the stroke sensor (**46**).

[0033] According to the present aspect, by detecting the stroke of the piston of the injection cylinder with the stroke sensor, it is possible to perform control, such as switching between high pressure/low pressure of the drive (pressing) pressure for the cylinder.

[0034] In a ninth aspect of the present invention, according to any one of the first to eighth aspects, the hydraulic device further comprises a pump. The pump is capable of supplying hydraulic oil to the injection cylinder (**102**) and the piston accumulator (ACC) (**20**).

[0035] According to the present aspect, the configuration of the hydraulic device of the die casting machine of the present invention is further clarified.

[0036] In a tenth aspect of the present invention, according to any one of the first to ninth aspects, the pressure of the fast pressure-raising piston accumulator (ACC-B) (**22**, **322**) in its initial state is set to 14 to 21 MPa and the pressure of the injection piston accumulator (ACC-A) (**21**, **321**) in its initial state is set to 5 to 12 MPa.

[0037] According to the present aspect, the initially set pressure of the fast pressure-raising piston accumulator and the injection piston accumulator is clarified, and therefore, the configuration of the drive (pressing under pressure) control of the injection cylinder is further clarified.

[0038] A die casting machine (**100**) used in a die casting method in an eleventh aspect of the present invention comprises a mold (**101**) that cast-molds a product, an injection cylinder (**102**) for injecting the molten metal (**15**) to the mold (**101**), and the hydraulic device (**103**, **203**) for pressing under high pressure the injection cylinder (**102**). The hydraulic device (**103**, **203**) comprises a piston accumulator (ACC) (**20**) that supplies hydraulic oil, which presses under pressure a piston (**13**) of the injection cylinder (**102**), to the injection cylinder (**102**) and an injection cylinder inlet valve (**31**) for releasing/closing the flow of the hydraulic oil from the piston accumulator (ACC) (**20**) to the injection cylinder (**102**). The piston accumulator (ACC) comprises a high pressure fast pressure-raising piston accumulator (ACC-B) (**22**, **322**) and the low-pressure injection piston accumulator (ACC-A) (**21**, **321**). The die casting method that uses such a die casting machine is characterized by comprising a high-pressure injection step for supplying high-pressure hydraulic oil from

the fast pressure-raising piston accumulator (**22**, **322**) to the injection cylinder (**102**) and pressing under pressure the piston (**13**) of the injection cylinder (**102**) to inject molten metal and a low-pressure injection step for supplying low-pressure hydraulic oil from the injection piston accumulator (**21**, **321**) to the injection cylinder (**102**) when shutting off the hydraulic oil from the fast pressure-raising piston accumulator (**22**, **322**) to the injection cylinder (**102**), and pressing under pressure the piston (**13**) of the injection cylinder (**102**) to continue injection of molten metal.

[0039] With such a configuration, it is possible to suppress the occurrence of surge pressure of molten metal in the cavity of a mold, prevent the occurrence of burr and spouting of molten metal, and further minimize the variations in the quality of molded product on site in a die casting method capable of fast injection molding by activating the piston of the injection cylinder under high pressure and switching the drive to a low-pressure drive at a predetermined stroke of the piston, even if there are variations in the amount of molten metal in the plunger sleeve of the mold.

[0040] In a twelfth aspect of the present invention, according to the eleventh aspect, the hydraulic device (**103**, **203**) further comprises a pressure-increasing accumulator (**23**) for holding under pressure molten metal in the mold (**101**) at a predetermined pressure for a predetermined period of time. The method further comprises a step for further continuing to apply pressure to the molten metal using the pressure-increasing accumulator (**23**) after the injection of molten metal by the fast pressure-raising piston accumulator (**22**, **322**) and the injection piston accumulator (**21**, **321**) is completed.

[0041] According to the present aspect, the configuration of the method is further clarified, which is capable of ensuring the excellent quality of a product by applying pressure continuously to molten metal using the pressure-increasing accumulator after the completion of injection of molten metal.

[0042] In a thirteenth aspect of the present invention, according to either the eleventh or the twelfth aspect, the hydraulic device (**103**, **203**) further comprises a pump, and the method further comprises a step, before the high-pressure injection step and the low-pressure injection step, for supplying hydraulic oil from the pump to the injection cylinder (**102**) to move forward the piston (**13**) of the injection cylinder (**102**).

[0043] According to the present aspect, the step for moving forward the piston of the injection cylinder up to a predetermined position in the previous stage of the commencement of injection molding is further clarified.

[0044] In a fourteenth aspect of the present invention, according to any one of the eleventh to thirteenth aspects, the hydraulic device (**103**, **203**) further comprises a stroke sensor (**46**) for detecting a stroke of the piston (**13**) of the injection cylinder (**102**). The high-pressure injection step and the low-pressure injection step are commenced, respectively, based on the stroke of the piston (**13**) detected by the stroke sensor (**46**).

[0045] According to the present aspect, the configuration of control under which the high-pressure injection (drive of the piston at a fast speed) is commenced and ended (i.e., the commencement of the low-pressure injection) based on the stroke of the piston (**13**) of the injection cylinder (**102**) is further clarified.

[0046] A die casting machine according to a sixteenth aspect of the present invention comprises a mold (**101**) that cast-molds a product, an injection cylinder (**102**) for injecting molten metal (**15**) to the mold (**101**) by moving a piston (**13**) comprised by itself (injection cylinder), the injection cylinder (**102**) comprising a head chamber (**16**H) that moves forward the piston (**13**) toward the mold (**101**) when hydraulic oil is supplied thereto and a rod chamber (**16**R) that moves back the piston (**13**) so that it moves away from the mold (**101**) when hydraulic oil is supplied thereto, and a hydraulic device (**303**) for supplying hydraulic oil to the injection cylinder (**102**). In the die casting machine (**100**), the hydraulic device (**303**) is characterized by comprising the injection piston accumulator (**20**) that supplies hydraulic oil, which presses under pressure the piston (**13**) of the injection cylinder (**102**), to the injection cylinder (**102**), the injection piston accumulator (**20**) comprising a hydraulic oil chamber (**218**) that stores hydraulic oil and a gas chamber (**217**) that stores gas, the hydraulic oil chamber (**218**) and the gas chamber (**217**) being partitioned in a fluidically tight manner, a fast speed adjusting valve (**31**) for controlling/closing the flow of hydraulic oil from the injection piston accumulator (**20**) to the head chamber (**16**H) of the injection cylinder (**102**), and a plurality of gas bottles (**71**, **72**, **73**) arranged in parallel so as to communicate fluidically with the gas chamber (**217**) of the injection piston accumulator (**20**) via respective switching valves (**75**, **76**, **77**).

[0047] Preferably, in the die casting machine, the number of the plurality of gas bottles is three and the ratio of internal volumes between the three gas bottles is 1:2:4.

[0048] A die casting machine according to a sixteenth aspect of the present invention comprises a mold (**101**) that cast-molds a product, an injection cylinder (**102**) for injecting molten metal (**15**) to the mold (**101**) by moving a piston (**13**) comprised by itself (injection cylinder), the injection cylinder (**102**) comprising a head chamber (**16**H) that moves forward the piston (**13**) toward the mold (**101**) when hydraulic oil is supplied thereto (to the head chamber) and a rod chamber (**16**R) that moves back the piston (**13**) so that it moves away from the mold (**101**) when hydraulic oil is supplied thereto (to the rod chamber), and a hydraulic device (**403**) for supplying hydraulic oil to the injection cylinder (**102**). The hydraulic device (**403**) comprises an injection piston accumulator (**20**) that supplies hydraulic oil, which presses under pressure the piston (**13**) of the injection cylinder (**102**), to the injection cylinder (**102**), the injection piston accumulator (**20**) comprising a hydraulic oil chamber (**218**) that stores hydraulic oil and a gas chamber (**217**) that stores gas, the hydraulic oil chamber (**218**) and the gas chamber (**217**) being partitioned in a fluidically tight manner, a fast speed adjusting valve (**31**) for controlling/closing the flow of hydraulic oil from the injection piston accumulator (**20**) to the head chamber (**16**H) of the injection cylinder (**102**), and at least one gas bottle (**80**) installed so as to communicate fluidically with the gas chamber (**217**) of the injection piston accumulator (**20**) via a filling force pattern adjusting valve (**82**). The filling force pattern adjusting valve (**82**) is characterized by being capable of variably setting its valve opening degree and adjusting the filling force of hydraulic oil to the injection cylinder (**102**) by adjusting the opening degree of the filling force pattern adjusting valve (**82**).

[0049] Preferably, the die casting machine further comprises an automatic control device. The automatic control device comprises an operation circuit for selecting a filling force pattern using the fast injection stroke and the fast injection speed of the injection cylinder (**102**) as parameters, and is characterized in that the opening degree of the filling force

pattern adjusting valve (**82**) is adjusted so as to match with the filling force pattern selected by the operation circuit.

[0050] It is preferable for the hydraulic device (**303**, **403**) to further comprise a pressure-increasing accumulator (**23**) that communicates fluidically with the head chamber (**16**H) of the injection cylinder (**102**) and increases the pressure of molten metal in the mold for holding the molten metal at a predetermined pressure for a predetermined period of time after the injection filling of molten metal, a pressure-increasing opening/closing valve (**35**) installed between the pressure-increasing accumulator (**23**) and the injection cylinder (**102**) and releasing/shutting off the flow of hydraulic oil from the pressure-increasing accumulator (**23**) to the injection cylinder (**102**), a pressure-increasing time adjusting valve (**78**) installed in series to the pressure-increasing opening/closing valve (**35**) between the pressure-increasing accumulator (**23**) and the injection cylinder (**102**) and adjusting the pressure-increasing time of the injected molten metal by changing its opening degree, a hydraulic pump that communicate fluidically with the head chamber (**16**H) and the rod chamber (**16**R) of the injection cylinder (**102**), and an injection switching valve (**26**) installed between the hydraulic pump and the injection cylinder (**102**) and switching between guiding the flow of hydraulic oil from the hydraulic pump to the head chamber (**16**H) of the injection cylinder (**102**) and guiding it to the rod chamber (**16**R).

[0051] A die casting method using the die casting machine according to the sixteenth aspect comprises a low-speed injection step for pressing under pressure the molten metal (**15**) in the injection cylinder (**102**) at a low speed and a fast injection step for pressing under pressure and injecting the molten metal (**15**) in the injection cylinder (**102**) at a high speed. The fast injection step is characterized by comprising an opening setting procedure for setting the opening degree of the filling force pattern adjusting valve (**82**) in accordance with the fast injection speed and the injection filling force.

EFFECT OF THE INVENTION

[0052] In particular, in the die casting method or die casting machine capable of fast injection molding, by properly selecting a combination of a plurality of gas bottles, a fast speed raising is achieved in a brief time under high pressure at start time by utilizing pressure drop of hydraulic oil in the accumulator due to the expansion of gas without performing complicated control, the fast speed value is reduced by spontaneous reduction in speed due to the fluid resistance of the molten metal in the mold, the pressure is reduced to an optimum value before the completion of filling, and thus the impact value at the time of completion of filling is relaxed and the fast injection molding is enabled, and at the same time, the occurrence of surge pressure of molten aluminum in the cavity of the mold is suppressed and the occurrence of burr and spouting of molten metal, or scattering of tip of molten metal, etc., are prevented.

[0053] Further, even if there are variations in the amount of supply of molten metal, the plunger is reduced in speed spontaneously before the position of the completion of filling due to the fluid resistance of the molten metal that has flowed into the mold, and therefore, the position of reduction in speed in the mold is the same and thus the occurrence of surge pressure is suppressed and the occurrence of burr and spouting of molten metal, or scattering of tip of molten metal etc., are prevented.

[0054] The symbols in the parenthesis attached to each means indicate the relationship of correspondence with specific means in embodiments, which will be described later.

[0055] The present invention may be more fully understood from the description of the preferred embodiments of the invention set forth below, together with the accompanying drawings.

BRIEF DESCRIPTION OF THE DRAWINGS

[0056] FIG. **1** is a schematically explanatory diagram of a die casting machine according to a first embodiment of the present invention, showing a configuration in the vicinity of a mold **101** and an injection cylinder **102** of the die casting machine.

[0057] FIG. **2** is a system diagram of a hydraulic device **103** of a die casting machine **100** according to the first embodiment of the present invention.

[0058] FIG. **3** is a system diagram for explaining various operating states (outline) of the die casting machine **100** in FIG. **1**, showing the flow of hydraulic oil at the time of a low-speed operation of a piston of an injection cylinder etc.

[0059] FIG. **4** is a system diagram for explaining various operating states (outline) of the die casting machine **100** in FIG. **1**, showing the flow of hydraulic oil at the time of a fast pressure-raising operation of a piston of an injection cylinder etc.

[0060] FIG. **5** is a system diagram for explaining various operating states (outline) of the die casting machine **100** in FIG. **1**, showing the flow of hydraulic oil at the time of an injection operation etc.

[0061] FIG. **6** is a system diagram for explaining various operating states (outline) of the die casting machine **100** in FIG. **1**, showing the flow of hydraulic oil at the time of a pressure-intensifying operation etc.

[0062] FIG. **7** is a system diagram for explaining various operating states (outline) of the die casting machine **100** in FIG. **1**, showing the flow of hydraulic oil at the time of a charging operation of an injection piston ACC-A etc.

[0063] FIG. **8** is a system diagram for explaining various operating states (outline) of the die casting machine **100** in FIG. **1**, showing the flow of hydraulic oil at the time of a charging operation of a fast pressure-raising piston ACC-B etc.

[0064] FIG. **9** is a system diagram for explaining various operating states (outline) of the die casting machine **100** in FIG. **1**, showing the flow of hydraulic oil at the time of a moving back operation of an injection cylinder etc.

[0065] FIG. **10** is a system diagram of a hydraulic device **203** of a die casting machine according to a second diagram of the present invention, corresponding to FIG. **2**.

[0066] FIG. **11** is a schematically explanatory section view of a special piston accumulator (ACC) used in the die casting machine in the first embodiment of the present invention.

[0067] FIG. **12** is a chart of the injection speed and metal pressure in a conventional fast die casting method, wherein the horizontal axis represents the stroke and time axis.

[0068] FIG. **13** is a chart of the injection speed and metal pressure in a fast die casting method according to the present invention, wherein the horizontal axis represents the stroke and time axis.

[0069] FIG. **14** is a chart of a delay in pressure raising when a fast output (pressure of a fast accumulator) with respect to injection, showing a comparison by the pressure of accumulator.

[0070] FIG. **15** is an explanatory diagram of a device used in a test to obtain the graph in FIG. **14**.

[0071] FIG. **16** is a system diagram of a hydraulic machine of a die casting machine according to a third embodiment of the present invention.

[0072] FIG. **17** is a table showing the total amount of gas by combinations when three kinds of gas bottle are used.

[0073] FIG. **18** is a graph showing the reduction in pressure of a head chamber at the time of fast no-load injection (injection in a state where there is no molten material) for eight kinds of total gas capacity in an example of a die casting machine of 800-ton class (the reduction in pressure with respect to the fast injection stroke is shown).

[0074] FIG. **19** is a system diagram of a hydraulic device of a die casting machine according to a fourth embodiment of the present invention.

[0075] FIG. **20** shows an explanatory diagram of the change of a filling force pattern by the change of the opening degree of a filling force pattern adjusting valve, showing the change of the pressure (PH) (MPa) in a head chamber with respect to the time progress when the fast injection speed is 2 (m/sec) (this graph is referred to as a filling force pattern).

[0076] FIG. **21** shows an explanatory diagram of the change of a filling force pattern by the change of the opening degree of a filling force pattern adjusting valve, showing the change of the pressure (PH) (MPa) in a head chamber with respect to the time progress when the fast injection speed is 5 (m/sec).

[0077] FIG. **22** shows an explanatory diagram of the change of a filling force pattern by the change of the opening degree of a filling force pattern adjusting valve, showing the change of the pressure (PH) (MPa) in a head chamber with respect to the time progress when the fast injection speed is 8 (m/sec).

[0078] FIG. **23**A is a chart showing the change of the injection speed, the injection pressure (pressure in a head chamber **16**H of the injection cylinder **102**), etc. with respect to the time progress, and the state of a piston rod, each valve, etc., at that time in the third embodiment, showing the upper part of the chart.

[0079] FIG. **23**B is a chart showing the change of the injection speed, the injection pressure (pressure in the head chamber **16**H of the injection cylinder **102**), etc. with respect to the time progress, and the state of a piston rod, each valve, etc., at that time in the third embodiment, showing the lower part of the chart.

[0080] FIG. **24**A is a chart showing the change of the injection speed, the injection pressure (pressure in the head chamber **16**H of the injection cylinder **102**), etc. with respect to the time progress, and the state of a piston rod, each valve, etc., at that time in the fourth embodiment, showing the upper part of the chart, a diagram similar to that in FIG. **23**A.

[0081] FIG. **24**B is a chart showing the change of the injection speed, the injection pressure (pressure in the head chamber **16**H of the injection cylinder **102**), etc. with respect to the time progress, and the state of a piston rod, each valve, etc., at that time in the fourth embodiment, showing the lower part of the chart, a diagram similar to that in FIG. **23**B.

[0082] FIG. **25** is an explanatory diagram of the injection speed of ultrafast injection speed molding etc., showing a positional relationship when injection is completed for the amount of molten metal etc.

[0083] FIG. **26** is an explanatory diagram for illustrating a mechanism of the occurrence of defect when the amount of molten material runs short and the reduction in speed finishes before filling is completed.

DESCRIPTION OF THE PREFERRED EMBODIMENTS

[0084] A die casting machine (device) in embodiments of the present invention is explained below in detail based on the drawings. FIG. **1** is a schematically explanatory diagram of a part in the vicinity of a mold **101** and an injection cylinder **102** of a common die casting machine **100** for light metal, such as aluminum, as already explained, and the die casting machine **100** of the present invention also comprises the same mold **101** and the injection cylinder **102**. FIG. **2** is a system diagram of a first embodiment of the die casting machine **100** according to the present invention and FIGS. **3** to **9** are system diagrams for explaining various operating states (outline) of the die casting machine **100** in FIG. **1**. FIG. **11** is a schematically explanatory section view of a special piston accumulator (ACC) **20** used in the die casting machine **100** in the first embodiment of the present invention.

[0085] First, referring to FIG. **1**, the mold **101** and the injection cylinder **102** of the die casting machine **100** of the present invention are shown schematically. Although FIG. **1** is already explained in the explanation of the prior art, it is explained in more detail here. Normally, the die casting machine **100** in FIG. **1** casts a product of light metal, such as aluminum. The die casting machine **100** comprises the mold **101** and the injection cylinder **102** and in the mold **101**, a fixed mold **8** and a movable mold **9** are provided between a pair of fixed platen **10** and movable platen **11** opposing each other and as shown in FIG. **1**, by the engagement of the fixed mold **8** and the movable mold **9**, a cavity (hollow) **12** is formed therebetween and molten aluminum (AL) **15** is injected/filled in the cavity **12** and thus a molded product is produced. The injection cylinder **102** is provided in order to inject the molten aluminum **15** and the fixed platen **10** is provided with a plunger sleeve **7** that can store the molten aluminum **15** and the plunger sleeve **7** penetrates through the fixed platen **10** and the fixed mold **8** and communicates fluidically with the cavity **12**.

[0086] In the present embodiment, the injection cylinder **102** is a hydraulic-driven reciprocating piston/cylinder for injecting molten aluminum. The injection cylinder **102** comprises a cylinder **6** and a piston **13**. The piston **13** engages with the plunger sleeve **7** as shown in FIG. **1**. The piston **13** comprises a piston head **5** at its left end in FIG. **1** and a plunger rod **2** is linked to a piston rod **4** integrated with the piston head **5** by an injection coupling **3** and at the front end of the plunger rod **2**, a plunger tip **1** is attached. The plunger tip **1** is inserted into the plunger sleeve **7**, reciprocates within the plunger sleeve **7**, and pumps under pressure the molten aluminum **15** in the plunger sleeve **7**, and thereby, the molten aluminum **15** is injected and filled. In the present embodiment, the injection cylinder **102** is of hydraulic type, and therefore, it supplies hydraulic oil to the head side of the cylinder **6** to drive the piston head **5** and the piston rod **4** and presses the molten aluminum (AL) **15** stored in the plunger sleeve **7** to inject and fill it into the cavity (hollow) **12** within the fixed mold **8**, **9**, and thus a molded product is molded.

[0087] FIG. **2** illustratively shows the hydraulic circuit of a hydraulic device **103** in the first embodiment of the present invention, which drives the injection cylinder **102**. On the line

on the inlet side of a head chamber **16**H of the cylinder **6**, a seventh valve **31** that controls the injection speed and the piston ACC (accumulator) **20** capable of discharging oil at a high flow rate for fast (high-speed) injection are provided, and in the present embodiment, that the piston ACC (accumulator) **20** has a preferred configuration is one of the characteristics. The piston ACC **20** is divided into two parts, that is, an upper part and a lower part, and a piston **221** in a fast pressure-raising piston ACC (accumulator)-B **22** at the upper part has a projection part **222** of a rod part and the projection part **222** presses the upper surface of a piston **211** of an injection piston ACC (accumulator)-A **21** at the lower part. In the fast pressure-raising piston ACC-B **22** at the upper part, a high-pressure gas (for example, 14 MPa) is accumulated under pressure, which is detected/managed by a pressure sensor-Pb **44** and in the injection piston ACC-A **21** at the lower part, a low-pressure gas (for example, 6 MPa) is accumulated under pressure, which is detected/managed by a pressure sensor-Pa **43**. Although depending on the capacity of the accumulator, it is preferable to set the accumulation pressure (in particular, initial pressure) of the high-pressure gas in the fast pressure-raising piston ACC-B **22** in a range between 14 and 21 MPa and the accumulation pressure (in particular, initial pressure) of the low-pressure gas in the injection piston ACC-A **21** in a range between 5 and 12 MPa.

[0088] Next, the function of each valve comprised by the hydraulic device **103** in the present embodiment is explained. A first valve **24** is installed between a pump pressure supply inlet and the injection cylinder **102** and provided for the purpose of introducing pressurized hydraulic oil from a pump (not shown) to the head chamber **16**H of the cylinder **6** for low-speed injection forward movement. A second valve **25** is installed between a tank **40** and the injection cylinder **102** and provided for the purpose of returning the hydraulic oil in the head chamber **16**H of the cylinder **6** for injection back movement. A third valve **26** is installed between the pump pressure supply inlet and the injection cylinder **102** and provided for the purpose of introducing hydraulic oil from a pump (not shown) to a rod chamber **16**R of the cylinder **6** for injection back movement. A fourth valve **27** is installed between the tank **40** and the injection cylinder **102** and provided for the purpose of returning hydraulic oil in the head chamber **16**H of the cylinder **6** for injection forward movement. A fifth valve **28** is installed on the side of the hydraulic oil exit of the fast pressure-raising piston ACC-B **22** and provided for the purpose of causing the fast pressure-raising piston ACC-B **22** at the upper part to start descending at a high speed and stop in the middle of injection. A sixth valve **29** is installed between the piston ACC **20** and the injection cylinder **102** and provided for the purpose of introducing hydraulic oil at a high speed to the ACC (accumulators)-(A and B) **21**, **22**. The seventh valve **31** is installed between the sixth valve **29** and the injection cylinder **102** and provided for the purpose of controlling the injection speed.

[0089] An eighth valve **32** is provided for the purpose of supplying hydraulic oil to the piston ACC **20** from the pump. A ninth valve **33** is provided for the purpose of compressing the gas in a gas bottle-a **41** to a target pressure. A tenth valve **34** is provided for the purpose of compressing the gas in a gas bottle-b **42** to a target pressure. The eighth to tenth valves **32**, **33**, **34** are installed between the pump pressure supply inlet and the piston ACC **20**, between the pump pressure supply inlet and the gas bottle-a **41**, and between the pump pressure supply inlet and the gas bottle-b **42**, respectively. An eleventh valve **35** is provided between a pressure-increasing ACC (accumulator) **23** and the injection cylinder **102** for the purpose of supplying hydraulic oil at a preset pressure into the cylinder head chamber **16**H of the cylinder **6** by the hydraulic pressure from the pressure-increasing ACC (accumulator) **23**. On the exit side (the injection cylinder side) of the eleventh valve **35**, a variable speed controller **36** is provided and preferably capable of pressurizing (pressure-intensifying) a molded product at a fixed pressure and at the same time, of adjusting the flow rate (pressurizing rate) of hydraulic oil. Preferably, the seventh valve **31** is driven by a motor, however, it may be another type that is driven by hydraulic pressure, pneumatic pressure, etc. Preferably, the first to eleventh valves except for the seventh valve **31** are an electromagnetic valve, however, they may be one of another type. FIG. **2** shows a preferred hydraulic circuit.

[0090] Next, the operation of the hydraulic device **103** (therefore, the operation of the injection cylinder **102**) is explained.

[0091] First, before use, the eighth valve **32** is turned ON (conduction (open) state, that is, pump pressure is supplied), pistons of ACC **21**, **22** at the upper and lower parts are pushed up to the upper limit, and the gas in the gas bottle-a **41** is pressurized to a target pressure (for example, 6 MPa) by turning ON the ninth valve **33** (conduction (open) state, that is, pump pressure is supplied). Similarly, the gas in the gas bottle-b **42** is pressurized to a target pressure (for example, 14 MPa) by turning ON the tenth valve **34** (conduction state, that is, pump pressure is supplied). It is preferable to pressurize so that the target pressure in the gas bottle-a **41** is 5 to 12 MPa and the target pressure in the gas bottle-b **42** is 14 to 21 MPa.

[0092] In FIG. **3**, the operation of the device at the time of low-speed traveling of the piston **13** is explained by explaining the flow of hydraulic oil. The first valve **24** and the fourth valve **27** are turned ON. Next, the seventh valve **31** for controlling speed is opened gradually until a target piston speed is reached. The hydraulic oil from a pump (not shown) is introduced into the cylinder head chamber **16**H of the cylinder **6** from the first valve **24** at a flow rate limited by the seventh valve **31** for controlling speed, and the hydraulic oil in the cylinder rod chamber **16**R is returned from the fourth valve **27** to the tank **40** and the piston rod **4**, the plunger rod **2**, and the plunger tip **1** (piston **13**) move forward at a low speed (state between T**0** and T**1** in FIG. **13**).

[0093] When the piston **13** moves forward and a stroke sensor-Sa **46** detects that a high-speed switching position is reached (T**1** point in FIG. **13**), the hydraulic circuit switches from the state in FIG. **3** to the state in FIG. **4**. In FIG. **4**, the fifth valve **28** and the sixth valve **29** are turned ON and the seventh valve **31** for controlling speed opens wide. At this time, the fast pressure-raising piston ACC-B **22** at the upper part presses down under high pressure the piston **211** of the injection piston ACC-A **21** at the lower part (here, for example, it starts at 14 MPa) and high pressure oil is supplied into the head chamber **16**H of the cylinder **6** and it moves forward with high output, and therefore, the speed of the piston **13** is increased to a high speed value in a very short stroke. The stroke of the piston **13** is detected by the stroke sensor-Sa **46** and the piston **13** is moved forward about 50 to 100 mm and then the fifth valve **28** is turned OFF at the position included in the normal injection region. The timing with which the fifth valve **28** is turned OFF is obtained from a test and set so that a good casting can be obtained.

[0094] The state of the hydraulic circuit at this time is shown in FIG. **5**. The discharge exit of the fast pressure-raising piston ACC-B **22** at the upper part is closed, and therefore, it stops descending and the injection operation is continued by only the injection piston ACC-A **21** at the lower part. However, the gas pressure to move the piston is low (low pressure of the gas bottle-a **41**, here, about 6 MPa, for example) and therefore the molten aluminum (AL) **15** is cooled down while it flows into the cavity **12** within the mold and its viscosity increases. And the piston **13** reduces its speed while balancing with the resistance of the molten aluminum and thus the filling of the molten aluminum **15** is completed in a state with less shock.

[0095] The difference between the present invention and the conventional example is explained with reference to FIG. **12** and FIG. **13**, particularly as to the injection speed and the metal pressure. FIG. **12** and FIG. **13** are charts of the injection speed and the metal pressure Pm (pressure of molten aluminum in the cavity within the mold) in the fast (high speed) casting method, wherein the horizontal axis denotes the stroke (mm) and time (msec) and the vertical axis denotes the injection speed (m/sec) represented by a dotted line and the metal pressure (MPa) represented by a solid line, corresponding to the conventional example and the present invention, respectively. In the conventional example in FIG. **12**, when the high pressure raising of the piston of the injection cylinder commences at time T**11**, the injection speed (V) increases instantaneously and the metal pressure increases temporarily at this time. Further, the piston is kept on being pressed under high pressure continuously, however, this conventional example is a case where the amount of molten metal in the sleeve **7** is large and where the timing (point T**12**) with which the pressing pressure of the piston is reduced is delayed relatively. If the timing is delayed, a surge pressure occurs, i.e., the metal pressure increases rapidly near T**12**. This surge pressure causes the occurrence of burr and spouting of molten metal.

[0096] On the other hand, in the case of the present invention shown in FIG. **13**, the state of high pressure raising and after that (from T**0** to T**2**) is the same as that in the conventional example, however, at the point T**2**, the pressure to press the piston **13** is switched to a lower one. At this point T**2**, the metal pressure does not increase yet and the piston is kept on being pressed under low pressure and moves forward by the inertial force of the piston itself, however, due to the resistance of the metal pressure Pm, the speed of the piston **13**, that is, the injection speed V reduces gradually. Although the piston speed reduces, the piston **13** is kept on being pressed under low pressure, and therefore, the piston **13** further moves forward, the metal pressure begins to increase near point T**3** and finally it reaches a predetermined metal pressure. As described above, in the case of the present invention, no surge pressure occurs, and therefore, it is unlikely that the occurrence of burr and spouting of molten metal are caused.

[0097] In the state of the hydraulic circuit shown in FIG. **6**, after the filling of the molten metal **15** into the cavity is completed, the first valve **24** is turned OFF, the eleventh valve **35** is turned ON, the piston head **5** of the injection cylinder **102** is pressed by the pressure-increasing ACC (accumulator) **23**, and the molded product is pressurized at the preset metal pressure Pm.

[0098] FIG. **7** shows a state where hydraulic oil is charged to the piston ACC (accumulator) **20** while the solidification of molten aluminum of the molded product is awaited with continuous application of pressure. The eighth valve **32** is turned ON (and the fifth valve **28** is kept in the OFF state) and hydraulic oil is introduced from a pump (not shown) into hydraulic oil chambers **218**, **228** of the piston ACC **20**. Because the injection piston ACC **21** at the lower part is under lower pressure, the piston **211** at the lower part ascends first. When the piston **211** at the lower part of the piston ACC **20** ascends and hits the projection part **222** of the piston **221** at the upper part, the charge of the fast pressure-raising piston ACC-B **22** at the upper part begins. The state of the hydraulic circuit at that time is shown in FIG. **8**.

[0099] Next, the state at the time of back movement of injection in FIG. **9** is explained. The second valve **25** and the third valve **26** are turned ON. The hydraulic oil from a pump is introduced into the rod chamber **16**R of the cylinder **6** through the third valve **26** and the hydraulic oil in the rod chamber **16**H passes through a branch line between the seventh valve **31** and the injection cylinder **102** and is returned through the second valve **25** to the tank **40** via a check valve installed on the line, and the piston **13**, that is, the piston rod **4**, the plunger rod **2**, and the plunger tip **1** move back (move back so that the volume of the cylinder head chamber **16**H decreases).

[0100] Next, with reference to FIG. **11**, the piston ACC (accumulator) **20** in the first embodiment of the present invention is explained. FIG. **11** is a schematic transverse section view of the piston ACC (accumulator) **20**. As already explained, the piston ACC (accumulator) **20** comprises the fast pressure-raising piston ACC-B **22** at the upper part and the injection piston ACC-A **21** at the lower part, and the fast pressure-raising piston ACC-B **22** at the upper part and the injection piston ACC-A **21** at the lower part are linked. At the linking portion, the two accumulators (ACC) are linked so that a lower wall **226** of the fast pressure-raising piston ACC-B **22** at the upper part and an upper wall **216** of the injection piston ACC-A **21** at the lower part are closely arranged and in the center of the walls **226**, **216**, a through hole **202** is provided and at the same time, a sealing mechanism **201** is also provided.

[0101] The fast pressure-raising piston ACC-B **22** comprises the piston **221** and the projection part **222** attached to the center of the piston **221** in the downward direction and preferably in the form of a cylindrical rod. The projection part **222** slidably penetrates through the through hole **202** and the sealing mechanism **201** and the sealing mechanism **201** seals the projection part **222** in the form of a cylindrical rod and separates hermetically the hydraulic oil chamber **228** of the fast pressure-raising piston ACC-B **22** at the upper part from a gas chamber **217** of the injection piston ACC-A **21** at the lower part.

[0102] The fast pressure-raising piston ACC-B **22** comprises a gas chamber **227** at the upper part and the hydraulic oil chamber **228** at the lower part and the gas chamber **227** and the hydraulic oil chamber **228** are sealed hermetically by the piston **221**. The injection piston ACC-A **21** also comprises the gas chamber **217** at the upper part and the hydraulic oil chamber **218** at the lower part and the gas chamber **217** and the hydraulic oil chamber **218** are sealed hermetically by the piston **211**. An upper wall in opposition to the piston **221** of the fast pressure-raising piston ACC-B **22** is provided with a high-pressure gas inlet **224**, which connects a gas supply/discharge line from the gas bottle-b **42** to the gas chamber **227**. A sidewall near the lower wall **226** of the fast pressure-raising piston ACC-B **22** is provided with a hydraulic oil

discharge exit **225**, to which a hydraulic oil supply/discharge line from the hydraulic oil chamber **228** is connected. A lower wall in opposition to the piston **211** of the injection piston ACC-A **21** is provided with a hydraulic oil discharge exit **215**, to which a hydraulic oil supply/discharge line to the hydraulic oil chamber **218** is connected. A sidewall near the upper wall **216** of the injection piston ACC-A **21** is provided with a low-pressure gas inlet **214**, to which a gas supply/discharge line from the gas bottle-a **41** to the gas chamber **217** is connected. With the configuration of the piston ACC **20** described above, the above-mentioned operations of the hydraulic circuit of the hydraulic device **103** in the present embodiment are enabled.

[0103] A second embodiment of the present invention is shown in FIG. **10**. Referring to FIG. **10**, the constituent parts in FIG. **10** the same as or similar to those in the first embodiment shown in FIGS. **2** to **9** are specified by the same reference symbols. A die casting machine in the second embodiment is configured for the same purpose as that of the die casting machine in the first embodiment described above, and by comparison with the first embodiment, only a hydraulic device **203** is different. That is, the mold **101** and the injection cylinder **102** are completely the same as those in the first embodiment. In a hydraulic circuit shown in FIG. **10**, the injection piston ACC (accumulator)-A **21** and the fast pressure-raising piston ACC (accumulator)-B **22** of the piston ACC **20** in the first embodiment are replaced with an injection piston ACC (accumulator)-A **321** and a fast pressure-raising piston ACC (accumulator)-B **322**, as separate units, respectively, in the second embodiment, and this point is a difference between the first embodiment and the second embodiment. The injection piston ACC-A **321** and the fast pressure-raising piston ACC-B **322** are not an accumulator having a special structure, as the piston ACC **20** in the first embodiment, but both have a structure of an already known general accumulator.

[0104] As described above, by dividing the single piston accumulator (ACC) into two separate accumulators, in the second embodiment in FIG. **10**, a hydraulic system around the injection piston ACC-A **321** and the fast pressure-raising piston ACC-B **322** also differs from that in the first embodiment. That a fifth valve **228** is provided between the hydraulic pressure connection inlet of the fast pressure-raising piston ACC-B **322** and the sixth valve **29** is the same as that in the first embodiment, however, a hydraulic oil filling line (line from the eighth valve **32**) **51** to the two accumulators **321**, **322** is connected to a line (pipe) between the fifth valve **228** and the high-pressure-raising piston ACC-B **322** (M point). The line **51** also connects to, as in the first embodiment, a line **52** from the hydraulic oil exit of the injection piston ACC-A **321** (N point), and therefore, on the line **51**, a check valve **37** is provided between the M point and the N point. The check valve **37** prevents hydraulic oil from flowing from the fast pressure-raising piston ACC-B **322** under high pressure into the injection piston ACC-A **321** under low pressure.

[0105] A line **53** that connects to the inlet side of the sixth valve **29** from the fast pressure-raising piston ACC-B **322** under high pressure via the fifth valve **228** joins the line **52** from the hydraulic oil exit of the injection piston ACC-A **321** under low pressure at P point as shown in FIG. **10**. Consequently, because there is a possibility that high-pressure hydraulic oil may flow into the injection piston ACC-A **321** under low pressure via the line **53**, the injection piston ACC-A **321** under low pressure is provided with a check valve **38** between the N point and the P point on the line **52** to prevent this, and thus, the high-pressure hydraulic oil is prevented from flowing into the injection piston ACC-A **321**. Because of such a configuration as described above, the fifth valve **228** in the second embodiment has a structure different from that of the fifth valve **28** in the first embodiment as can been seen from comparison between FIG. **2** and FIG. **10**, that is, a structure in which the line is closed at the OFF time, not a structure in which a system that communicates with the tank **40** is formed at the OFF time.

[0106] Next, the operation of the device is explained, which relates to the difference between the first embodiment and the second embodiment. In the second embodiment also, the piston **13** of the injection cylinder **102** is activated under high pressure by the fast pressure-raising piston ACC-B **322** and the speed of the piston is increased to a high speed in a short stroke. At this time, the fifth valve **228** and the sixth valve **29** are set to the ON state. Then, the piston **13** is moved forward about 50 to 100 mm by similarly detecting that the piston stroke reaches a predetermined value with the stroke sensor-Sa **46** and the fifth valve **228** is turned OFF at the position where the normal injection region is entered.

[0107] Although the exit side of the fast pressure-raising piston ACC-B **322** is closed, the sixth valve **29** is in the ON state, and therefore, the injection operation is continued by only the injection piston ACC-A **321**. The gas pressure to move the piston is low (low pressure of the gas bottle-a **41**, here, about 6 MPa, for example) and therefore the molten aluminum (AL) is cooled down while it flows into the cavity **12** within the mold and its viscosity increases, and the piston **13** reduces its speed while balancing with the resistance of the molten AL and thus the filling is completed in a state with less shock (the same as that in the first embodiment). As described above, the operation of the hydraulic circuit is substantially the same as that in the first embodiment. Other operations of the hydraulic circuit, i.e., the operation up to the activation of the fast pressure-raising piston ACC-B **322**, the operation of the pressure-increasing ACC **23**, the operation to return the piston **13** of the injection cylinder **102** after injection molding, the operation to fill the hydraulic oil chamber of the fast pressure-raising piston ACC-B **322** and the injection piston ACC-A **321**, etc., are the same as those in the first embodiment. The configuration of the second embodiment other than the above is basically the same as that in the first embodiment, and therefore, an explanation is omitted to avoid duplication.

[0108] FIG. **16** illustratively shows a hydraulic circuit of a hydraulic device **303** in a third embodiment of the present invention, which drives the injection cylinder **102**. On a connection inlet line to the head chamber **16**H of the cylinder **6**, the injection piston accumulator (ACC) **20** is provided so as to communicate fluidly therewith, which is capable of discharging at a high flow rate for fast injection via the fast speed adjusting valve (the seventh valve) **31** that controls the injection speed. In general, the cylindrical injection piston accumulator **20** is partitioned into two chambers by the piston **211** that slides and reciprocates in the piston accumulator **20**, one of them is the hydraulic chamber **218** in which hydraulic oil is stored and the other is the gas chamber **217** in which gas is stored. The gas chamber **217** is provided with high-pressure gas from a gas bottle to press under pressure the piston **211** to supply the hydraulic oil in the hydraulic oil chamber to the hydraulic circuit of the hydraulic device **303**, that is, the head chamber **16**H of the injection cylinder **102**. In the present embodiment, the gas chamber **217** communicates fluidly with

first, second, and third gas bottles **71**, **72**, **73** in parallel via three switching valves, that is, first, second, and third switching valves **75**, **76**, **77** as shown in FIG. **16**. In the hydraulic device **303** in the present embodiment, as shown in FIG. **16**, the head chamber **16**H of the injection cylinder **102** further communicates fluidly with the pressure-increasing piston accumulator (ACC) **23** via a pressure-increasing time adjusting valve **78** and the pressure-increasing opening/closing valve (eleventh valve) **35**.

[0109] The connection inlet line of the rod chamber **16**R of the injection cylinder **102** communicates fluidly with the tank **40** via the tank switching valve (fourth valve) **27** and also communicates fluidly with a pump pressure supply inlet **55** via the injection switching valve (third valve) **26**. The connection inlet of the head chamber **16**H connects to another connection inlet of the injection switching valve (third valve) **26**. It is preferable for the injection switching valve (third valve) **26** to be an electromagnetic switching valve having three switching positions and as shown in FIG. **16**, the two connection inlets on one side connect to the connection inlet of the head chamber **16**H of the injection cylinder **102** and to the connection inlet of the rod chamber **16**R, respectively, and the two connection inlets on the other side connect to the tank **40** and the pump pressure supply inlet (discharge exit of the hydraulic pump) **55**, respectively.

[0110] Each valve of the hydraulic device **303** shown in FIG. **16** is explained. It is preferable for the fast speed adjusting valve (seventh valve) **31** to be a motor-driven valve capable of changing the valve opening degree continuously from the fully-open position to the fully-closed position. It is preferable for the pressure-increasing time adjusting valve **78** to be a motor-driven throttle valve capable of changing the valve opening degree continuously and eventually adjusting the pressure-increasing time by changing the resistance of the flow passage. The injection switching valve (third valve) **26** is already explained. The three positions are a flow passage closing position, a forward flow passage opening position, and an intersecting flow passage opening position, as shown schematically in FIG. **16**. It is preferable for the first, second, and third switching valves **75**, **76**, **77** of the gas bottle, the pressure-increasing opening/closing valve (eleventh valve) **35**, and the tank switching valve (fourth valve) **27** to be an electromagnetic switching valve that switches between open and close.

[0111] Next, the operation of the die casting machine **100** and the hydraulic device **303** in the present embodiment is explained. The overall operation of the die casting machine **100** is the same as that of a normal die casting machine, and therefore, explanation is given roughly. First, the molten AL **15** is supplied to the plunger sleeve **7** and the injection operation is performed without delay before the temperature of the molten metal reduces. First, the molten metal **15** is pressed by the piston **13** at a low speed toward the cavity **12** of the mold **101** (low-speed injection stage). At this time, the drive of the piston **13** may be performed by operating the injection switching valve **26** so that the hydraulic pump (or pump pressure supply inlet, i.e. variable pump, or combination of constant discharge pump and flow rate control valve) **55** supplies hydraulic oil to the head chamber **16**H in the present embodiment, or may be performed by driving a booster (not shown) with a servo motor (not shown) to supply hydraulic oil to the head chamber **16**H of the injection cylinder **102** in a hybrid die casting machine. In other die casting machines, the drive is performed similarly by supplying hydraulic oil to the head chamber **16**H of the injection cylinder **102**. When the piston **13** has moved a predetermined stroke or the piston **13** has reached a predetermined position, the low-speed injection stage is switched to the fast injection stage. Next, the fast speed adjusting valve (seventh valve) **31** is activated to drive the piston **13** at a high speed (fast injection stage). In this fast injection stage, the novel configuration of the present invention effectively functions. In this fast injection stage, the cavity **12** is filled with the molten metal **15**. Next, the fast speed adjusting valve (seventh valve) **31** is closed and at the same time, the pressure-increasing opening/closing valve (eleventh valve) **35** is opened, the hydraulic oil in the pressure-increasing piston accumulator **23** is introduced to the head chamber **16**H, and the pressure in the cavity is increased to a predetermined pressure in a predetermined period of time (pressure-increasing stage). Next, the predetermined pressure is held for a predetermined period of time (pressure-holding stage). After that, the product is extracted (mold-opening stage). The above is the outline of the injection molding process.

[0112] Next, the operation of the hydraulic device **303** in the present embodiment is explained. In the example shown in FIG. **16**, it is preferable to comprise three gas bottles different in capacity from one another. However, the number of gas bottles may be less (two) or more (four or more). In the present embodiment, in order to give more specific explanation, it is assumed that the die casting machine is of 800-ton class. In this case, it is preferable for the gas chamber capacity of the injection piston accumulator **20** to be 10 L (liters). In this case, it is preferable for the diameter of the piston head **5** of the injection cylinder **102** to be 150 mm, for the stroke (fast stroke) of the piston **13** of the injection cylinder **102** at the fast injection step to be 200 mm or more, and for the charge pressure (pressure in the gas chamber **217** before the injection operation) of the injection piston accumulator **20** to be 18.6 MPa. In this case, according to the gas chamber capacity (10 L) of the injection piston accumulator **20**, it is preferable for the capacity of the first gas bottle **71** to be 10 L, for that of the second gas bottle **72** to be 20 L, and for that of the third gas bottle **73** to be 40 L, respectively, for the capacities of the three gas bottles. In this manner, it is preferable for the ratio between the capacities of the three gas bottles to be 1:2:4.

[0113] In the present embodiment, the three gas bottles **71**, **72**, **73** having three kinds of capacity are provided, and therefore, there can be conceived eight combinations as a total capacity of the gas bottles that press under pressure the injection piston accumulator (refer to Table in FIG. **17**). That is, it can be seen from this Table in FIG. **17** that these eight combinations can be realized by operating the first, second, and third switching valves **75**, **76**, **77** attached to each gas bottle. That is, when all of the three switching valves **75**, **76**, **77** are closed, the gas bottle capacity is 0 L and the effective total gas capacity is the capacity 10 L of the gas chamber **217**. Similarly, when only the first switching valve **75** is opened, the total gas capacity is 20 L, when all of the three switching valves **75**, **76**, **77** are opened, the total gas capacity is gas bottle total capacity 70 L+gas chamber capacity 10 L, that is, 80 L. A graph is shown in FIG. **18**, which shows the pressure drop in the head chamber **16**H in a specific mold at the fast injection step for the eight kinds of total gas capacity of the gas bottles in the example of the die casting machine of 800-ton class (pressure drop in the fast injection stroke is shown). FIG. **18** may be obtained by actually operating the injection system (no-load injection), or may be obtained by

calculation (adiabatic expansion change of gas). The larger the total gas capacity of the gas bottle, the less is the pressure drop and the higher is the average pressure to press the piston **4**, and therefore, the injection speed is increased.

[0114] According to the present embodiment, the method is one for realizing a fast injection speed by selecting an optimum combination of gas bottles (operating the opening/closing of switching valves) in accordance with the characteristics (capacity of the cavity and projection area) of a mold for molding and at the same time, for preventing the occurrence of surge pressure etc. by utilizing pressure drop that occurs in the expansion of a gas caused at the fast injection step to spontaneously reduce the speed.

[0115] In an actual operation, it is preferable to perform a trial injection as follows, as a method for determining an injection speed, a final filling force (hydraulic pressure on the side of the injection cylinder head: PH), and a holding pressure with which a high-quality molded product can be molded. In this method, first, in order to avoid damage to the mold, injection is started at a low speed (about 2 m/sec), a low pressure (about 10 MPa), and a holding pressure of about 5 MPa. If the injection speed is low, molten metal solidifies in the middle of filling and the misrun of molten metal occurs, and therefore, the injection speed is increased if the run of molten metal is not sufficient by checking a molded product. At this time, if the set value of the final filling force is small (the total gas capacity is small), the injection speed drops below the set value during the injection operation because the fluid resistance reduces the filling force too much, and therefore, the measured data of the speed is checked and when the drop is remarkable, the final filling force is also increased (the total gas capacity is increased) and adjustment is made so that the fast injection speed spontaneously reduces and the process transits smoothly to the pressure-increasing process and the pressure-holding process. When burr occurs as a result of an increase in the final filling pressure, the final filling pressure is reduced. Then, when there is no problem about the run of molten metal or burr, the holding pressure is increased and the occurrence of casting blow hole, shrinkage, and cold shut defect are avoided. In addition, the opening degree of the pressure-increasing time adjusting valve **78** is changed and thereby the pressure-increasing time is also adjusted. In order to further improve the quality, the injection speed is increased again and the quality is checked.

[0116] FIG. **23** shows a chart representing the change of the injection speed, the injection pressure (pressure in the head chamber **16**H of the injection cylinder **102**), etc. with respect to the time progress, and the state of the piston rod, each valve, etc., at that time in the present embodiment. In FIG. **23**, PH denotes the pressure in the head chamber **16**H and Pm denotes the holding pressure of the pressure-increasing piston accumulator. In FIG. **23**, the low-speed injection stage corresponds to time between t**0** and t**1**, the fast injection stage corresponds to time between t**1** and t**2**, the pressure-increasing stage corresponds to time between t**2** and t**3**, and the pressure-holding stage corresponds to time between t**3** and t**4**. At t**2**, switching from the fast injection stage to the pressure-increasing stage (that is, switching of the fast speed adjusting valve (seventh valve) **31** (from a desired valve opening degree to a closed state) and switching of the pressure-increasing opening/closing valve (eleventh valve) **35** (from open to close) is performed by detecting the pressure (PH) in the head chamber **16**H, or detecting the position of the injection piston **4**, or using both the detected values of the pressure PH and the position of the piston. The operation of the piston **4**, the operation of each valve, etc., can be understood sufficiently by viewing FIG. **23**, and therefore, their detailed explanation is omitted.

[0117] FIG. **19** is a system diagram of a fourth embodiment of a hydraulic device of the die casting machine **100** according to the present invention. A hydraulic device **403** in the fourth embodiment differs from the hydraulic device **303** in the third embodiment only in the configuration near the gas bottle. That is, in a hydraulic circuit of the hydraulic device **403** in FIG. **19**, the first, second, and third gas bottles **71**, **72**, **73** and the first, second, and third switching valves **75**, **76**, **77** in the hydraulic circuit of the hydraulic device **303** in FIG. **16** are replaced with a gas bottle **80** and a filling force pattern adjusting valve **82**. In the hydraulic device **403**, other configurations are basically the same as those in the hydraulic device **303** in the third embodiment shown in FIG. **16**.

[0118] The operation of the die casting machine and the hydraulic device **403** in the present embodiment differs from that in the third embodiment only in the operation in the fast injection stage, and therefore, only the operation in the fast injection step (stage), which is the only difference between the present embodiment and the third embodiment, is explained. In the present embodiment, the capacity of the gas bottle **800** has only one kind, and therefore, the final filling force (the filling force when the fast injection stage is completed) of hydraulic oil to the head chamber **16**H of the injection cylinder **102** is adjusted and thereby the occurrence of surge pressure is suppressed by changing the opening degree of the filling force pattern adjusting valve **82** to change the flow resistance of the pipe conduit from the gas bottle **80** to the injection piston accumulator **20** and thereby change and adjust the pressing force of the gas against the piston **211**. It is preferable for the filling force pattern adjusting valve **82** to be a motor-driven throttle valve.

[0119] FIGS. **20** to **22** show explanatory diagrams of the change of the filling force pattern by the throttle valve (filling force pattern adjusting valve **82**) on a gas supply line. FIGS. **20** to **22** each show the change of the pressure (PH) (MPa) in the head chamber with respect to the time progress at the time of no-load injection when the fast injection speed is 2, 5, and 8 (m/sec), respectively (this graph is referred to as a filling force pattern). As parameters, those when the valve opening degree is 0.02 m (solid line), 0.003 m (broken line), 0.001 m (alternate long and short dash line), and 0.0002 m (alternate long and two short dashes line) are shown, respectively. FIGS. **20** to **22** may be obtained by theoretical calculations or may be obtained by the actual no-load injection. In FIGS. **20** to **22**, differences in the drop pattern of the pressure (PH) in the head chamber with respect to the time progress according to the valve opening degree at each injection speed are shown. The pressure at the lowest point of the pressure (PH) in the head chamber is the final filling force. The larger the pressure drop, the larger is the drop in drive force of the piston of the injection cylinder **102**, that is, the larger is the reduction in speed of the piston (drop in the filling force), and thus the occurrence of surge pressure is suppressed. It is seen from FIGS. **20** to **22** that the pressure of the injection cylinder head once dropped begins to increase again, however, before the pressure increases again, the hydraulic valves are switched (the pressure-increasing opening/closing valve **35** is opened and the fast speed adjusting valve **31** is closed) and thus the

fast injection stage transits to the pressure-increasing stage. It can be seen from FIGS. **20** to **22** that there is an enough time for the transition to be done.

[0120] In the present embodiment, as shown in FIGS. **20** to **22**, the filling force pattern can be calculated as a function of the fast injection stroke (injection stroke in the fast injection stage), the fast injection speed, and the opening degree of the filling force pattern adjusting valve, and therefore, it is preferable for the die casting machine in the present embodiment to comprise an automatic control device having an operation circuit for calculating the filling force pattern. Actually, a configuration is preferable, in which the opening degree of the filling force pattern adjusting valve **82** is finally determined by an automatic operation circuit of the automatic control device when the injection stroke, the fast injection speed, and the final filling force in the fast injection stage are input.

[0121] It is preferable to perform a method for determining an optimum valve opening degree by a trial injection also in the present embodiment, as already described in the third embodiment (refer to page 35 lines 1 to 18 in Japanese text (i.e. page 41 line 30 to page 42 line 26 in the English text)). In the present embodiment, a trial injection is performed in such a manner that the opening degree of the filling force pattern adjusting valve **82** is increased sequentially from smaller one. In each trial injection, the quality of a molded product is checked and an optimum condition is selected.

[0122] FIG. **24** is a chart representing the change of the injection speed, the injection pressure (pressure in the head chamber **16**H of the injection cylinder **102**), etc. with respect to the time progress, and the state of the piston rod, each valve, etc., at that time in the fourth embodiment. FIG. **14** is basically the same as FIG. **23** and the symbols etc. are the same as those in FIG. **23**. The first, second, and third switching valves **75**, **76**, **77** in FIG. **23** do not exist in FIG. **24**, and instead, the time chart of the filling force pattern adjusting valve **82** is shown. It is known from FIG. **24** that the filling force pattern adjusting valve **82** is maintained at a fixed valve opening degree after molding is started.

[0123] Next, the effects and working of the above-mentioned embodiments are explained. According to the die casting machine in the first embodiment of the present invention, the following effects can be expected.

[0124] In particular, in the die casting method or the die casting machine capable of fast injection molding, it is possible to suppress the occurrence of surge pressure of molten aluminum in the mold cavity and prevent the occurrence of burr and spouting of molten metal by activating the piston under high pressure without reducing the pressure to drive (press under pressure) the piston of the injection cylinder and switching to the low-pressure drive at a predetermined stroke of the piston.

[0125] Further, even if there are variations in the amount of supply of molten metal, the variations in the quality of a molded product on site can be minimized.

[0126] By using the piston accumulator (ACC) having the special structure of the present invention, the discontinuity in the speed at the fast pressure-raising step caused by the opening/closing etc. of the large-sized valve and the check valve can be avoided and the continuity can be ensured, and therefore, it is possible to manufacture a high-quality molded product.

[0127] Further, due to the piston accumulator (ACC) having the special structure, the installation space can be made compact, and therefore, it is possible to exhibit the superiority in terms of cost.

[0128] According to the die casting machine in the second embodiment of the present invention, the following effects can be expected.

[0129] As in the first embodiment, it is possible to suppress the occurrence of surge pressure of molten metal in the mold cavity, prevent the occurrence of burr and spouting of molten metal, and further reduce the variations in the quality of a molded product on site.

[0130] According to the die casting machine in the third embodiment of the present invention, the following effects can be expected.

[0131] In particular, in the die casting method or the die casting machine capable of fast injection molding, by properly selecting a combination of the plurality of gas bottles, a fast speed is achieved in a brief time under high pressure at start time by utilizing pressure drop of hydraulic oil due to the expansion of gas without performing complicated control, the pressure is reduced to the optimum value by the completion of filling, the fast speed value of the injection is reduced before spontaneous reduction in speed due to the fluid resistance of the molten metal in the mold, and thus the impact at the time of completion of filling is relaxed and the fast injection molding is enabled, and at the same time, the occurrence of surge pressure of molten aluminum in the mold cavity is suppressed and the occurrence of burr and spouting of molten metal, or scattering of tip of molten metal are prevented.

[0132] Further, even if there are variations in the amount of supply of molten metal, the occurrence of surge pressure is suppressed, and the occurrence of burr and spouting of molten metal, or scattering of tip of molten metal are prevented.

[0133] According to the die casting machine in the fourth embodiment of the present invention, the following effects can be expected.

[0134] By providing the throttle valve capable of changing its opening degree on the gas supply line from the gas bottle to the injection piston accumulator to limit the flow rate of supply of gas from the gas bottle during fast injection and cause the pressure drop to occur, (that is, by the adjustment of the opening degree of the filling force pattern adjusting valve in the above-mentioned embodiment), it is possible to suppress the occurrence of surge pressure of molten metal in the mold cavity, prevent the occurrence of burr and spouting of molten metal, or scattering of tip of molten metal, and further reduce variations in the quality of a molded product on site as similarly to the first embodiment.

[0135] Because the number of gas bottles can be reduced to one, it is possible to reduce the cost of the hydraulic device, and therefore, the cost of the die casting machine.

[0136] In the hydraulic circuit in the embodiments described above or shown in the accompanied drawings, only the minimum components are described basically in order to make explanation easier-to-understand, however, it may also be possible to add components, such as a valve, a filter, and a sensor, which are necessary in accordance with the function, control, arrangement, etc., of the device.

[0137] In the above-described embodiments, the material of molten metal is described as aluminum, however, other material may be used.

[0138] The numerical values described in the present specification and, for example, in FIGS. **17**, **18**, etc., are used for

convenience of explanation, and the present invention is not limited by these numerical values in particular, and the numerical values may vary when, for example, the type of the die casting machine changes.

[0139] The above-described embodiments are only examples of the present invention and the present invention is not limited to the embodiments but defined only by the description in claims and other embodiments can also be embodied.

[0140] While the invention has been described by reference to specific embodiments chosen for the purposes of illustration, it should be apparent that numerous modifications could be made thereto, by those skilled in the art, without departing from the basic concept and scope of the invention.

1. A die casting machine, comprising:
a mold that cast-molds a product;
an injection cylinder for injecting molten metal to the mold; and
a hydraulic device for pressing under high pressure the injection cylinder,
wherein
the hydraulic device comprises:
a piston accumulator (ACC) that supplies hydraulic oil, which presses under pressure a piston of the injection cylinder, to the injection cylinder; and
an injection cylinder inlet valve for releasing/closing a flow of the hydraulic oil from the piston accumulator (ACC) to the injection cylinder, and wherein
the piston accumulator (ACC) comprises a high pressure fast pressure-raising piston accumulator (ACC-B) and a low-pressure injection piston accumulator (ACC-A).

2. The die casting machine according to claim **1**, wherein
the piston of the injection cylinder is first pressed under pressure by a high hydraulic oil pressure supplied by the fast pressure-raising piston accumulator (ACC-B) and operates at a fast injection speed, and then is pressed under pressure by a low hydraulic oil pressure supplied by the injection piston accumulator (ACC-A) and operates when the hydraulic oil pressure supplied by the fast pressure-raising piston accumulator (ACC-B) is shut off.

3. The die casting machine according to claim **1**, wherein
the fast pressure-raising piston accumulator (ACC-B) comprises an ACC-B piston that separates/forms a gas chamber and a hydraulic oil chamber within the fast pressure-raising piston accumulator (ACC-B) and reciprocates therein, and a projection part fixed on the ACC-B piston and extending up to a side of the hydraulic oil chamber, and penetrating and extending through an end wall on a side of the hydraulic oil chamber of the fast pressure-raising piston accumulator (ACC-B), wherein
the injection piston accumulator (ACC-A) comprises an ACC-A piston that separates/forms a gas chamber and a hydraulic oil chamber within the injection piston accumulator (ACC-A) and reciprocates therein, and wherein
the projection part is capable of penetrating through an end wall on a side of the gas chamber of the injection piston accumulator (ACC-A), invading the gas chamber of the injection piston accumulator (ACC-A), and detachably coming into contact with and pressing under pressure the ACC-A piston.

4. The die casting machine according to claim **3**, wherein
the fast pressure-raising piston accumulator (ACC-B) and the injection piston accumulator (ACC-A) are formed integrally into one unit.

5. The die casting machine according to claim **1**, further comprising a pressure-increasing accumulator for holding under pressure molten metal in the mold at a predetermined pressure for a predetermined period of time after the injection molding of the molten metal.

6. The die casting machine according to claim **1**, wherein
the injection cylinder inlet valve is capable of adjusting the flow rate of the hydraulic oil from the piston accumulator (ACC) to the injection cylinder.

7. The die casting machine according to claim **1**, further comprising a stroke sensor for detecting a stroke of the piston of the injection cylinder.

8. The die casting machine according to claim **7**, wherein
the injection of the molten metal is controlled by the stroke sensor.

9. The die casting machine according to claim **1**, wherein
the hydraulic device further comprises a pump, and wherein
the pump is capable of supplying hydraulic oil to the injection cylinder and the piston accumulator (ACC).

10. The die casting machine according to claim **1**, wherein
pressure of the fast pressure-raising piston accumulator (ACC-B) in its initial state is set to 14 to 21 MPa and pressure of the injection piston accumulator (ACC-A) in its initial state is set to 5 to 12 MPa.

11. A die casting method using a die casting machine, the machine comprising:
a mold that cast-molds a product;
an injection cylinder for injecting molten metal to the mold; and
a hydraulic device for pressing under high pressure the injection cylinder, wherein
the hydraulic device comprises a piston accumulator (ACC) that supplies hydraulic oil, which presses under pressure a piston of the injection cylinder, to the injection cylinder and an injection cylinder inlet valve for releasing/closing a flow of the hydraulic oil from the piston accumulator (ACC) to the injection cylinder, and wherein
the piston accumulator (ACC) comprises a high pressure fast pressure-raising piston accumulator (ACC-B) and a low-pressure injection piston accumulator (ACC-A), the die casting method comprising:
a high-pressure injection step for supplying high-pressure hydraulic oil from the fast pressure-raising piston accumulator to the injection cylinder and pressing under pressure the piston of the injection cylinder to inject molten metal; and
a low-pressure injection step for supplying low-pressure hydraulic oil from the injection piston accumulator to the injection cylinder when shutting off hydraulic oil from the fast pressure-raising piston accumulator to the injection cylinder, and pressing under pressure the piston of the injection cylinder to continue injection of molten metal.

12. The die casting method according to claim **11**, wherein
the hydraulic device of the die casting machine further comprises a pressure-increasing accumulator for hold-

ing under pressure molten metal in the mold at a predetermined pressure for a predetermined period of time, and wherein

the method further comprises a step for further continuing to apply pressure to the molten metal using the pressure-increasing accumulator after the injection of molten metal by the fast pressure-raising piston accumulator and the injection piston accumulator is completed.

13. The die casting method according to claim **11**, wherein

the hydraulic device of the die casting machine further comprises a pump, and wherein

the method further comprises a step, before the high-pressure injection step and the low-pressure injection step, for supplying hydraulic oil from the pump to the injection cylinder to move forward the piston of the injection cylinder.

14. The die casting method according to claim **11**, wherein

the hydraulic device of the die casting machine further comprises a stroke sensor for detecting a stroke of the piston of the injection cylinder, and wherein

the high-pressure injection step and the low-pressure injection step are commenced, respectively, based on the stroke of the piston detected by the stroke sensor.

15-16. (canceled)

17. A die casting machine comprising:

a mold that cast-molds a product;

an injection cylinder for injecting molten metal to the mold by moving a piston comprised by the injection cylinder, the injection cylinder comprising a head chamber that moves forward the piston toward the mold when hydraulic oil is supplied to the head chamber and a rod chamber that moves back the piston so that it moves away from the mold when hydraulic oil is supplied to the rod chamber; and

a hydraulic device for supplying hydraulic oil to the injection cylinder, wherein

the hydraulic device comprises:

an injection piston accumulator that supplies hydraulic oil, which presses under pressure the piston of the injection cylinder, to the injection cylinder, the injection piston accumulator comprising a hydraulic oil chamber that stores hydraulic oil and a gas chamber that stores gas, the hydraulic oil chamber and the gas chamber being partitioned in a fluidically tight manner;

a fast speed adjusting valve for controlling/closing a flow of hydraulic oil from the injection piston accumulator to the head chamber of the injection cylinder; and

at least one gas bottle installed so as to communicate fluidically with the gas chamber of the injection piston accumulator via a filling force pattern adjusting valve, and wherein

the filling force pattern adjusting valve is capable of variably setting its valve opening degree and adjusting the filling force of hydraulic oil to the injection cylinder by adjusting the opening degree of the filling force pattern adjusting valve.

18. The die casting machine according to claim **17**, further comprising an automatic control device, wherein

the automatic control device comprises an operation circuit for selecting a filling force pattern using a fast injection stroke and a fast injection speed of the injection cylinder as parameters, and wherein

the opening degree of the filling force pattern adjusting valve is adjusted so as to match with a filling force pattern selected by the operation circuit.

19. The die casting machine according to claim **17**, wherein the hydraulic device further comprises:

a pressure-increasing accumulator that communicates fluidically with the head chamber of the injection cylinder and increases pressure of molten metal in the mold for holding the molten metal at a predetermined pressure for a predetermined period of time after an injection filling of molten metal;

a pressure-increasing opening/closing valve installed between the pressure-increasing accumulator and the injection cylinder and releasing/shutting off a flow of hydraulic oil from the pressure-increasing accumulator to the injection cylinder; and

a pressure-increasing time adjusting valve installed in series to the pressure-increasing opening/closing valve between the pressure-increasing accumulator and the injection cylinder and adjusting pressure-increasing time of injected molten metal by changing its opening degree.

20. The die casting machine according to claim **17**, wherein the hydraulic device further comprises:

a hydraulic pump that communicate fluidically with the head chamber and the rod chamber of the injection cylinder; and

an injection switching valve installed between the hydraulic pump and the injection cylinder and switching between guiding a flow of hydraulic oil from the hydraulic pump to the head chamber of the injection cylinder and guiding it to the rod chamber.

21-22. (canceled)

23. A die casting method using the die casting machine according to claim **17**, the die casting method comprising:

a low-speed injection step for pressing under pressure molten metal in the injection cylinder at a low speed; and

a fast injection step for pressing under pressure and injecting the molten metal in the injection cylinder at a high speed into the mold, wherein

the fast injection step comprises an opening setting procedure for setting the opening degree of the filling force pattern adjusting valve in accordance with a fast injection speed and an injection filling force.

24. The die casting method according to claim **23**, wherein

the die casting machine further comprises an automatic control device comprising an operation circuit for determining an opening degree of the filling force pattern adjusting valve using a fast injection stroke, a fast injection speed, and a final filling force of the injection cylinder as parameters; and wherein

the opening setting procedure comprises a stage for determining an opening degree of the filling force pattern adjusting valve by the operation circuit.

25. The die casting method according to claim **23**, wherein the hydraulic device further comprises:

a pressure-increasing accumulator that communicates fluidically with the head chamber of the injection cylinder and increases a pressure of molten metal in the mold for holding the molten metal at a predetermined pressure for a predetermined period of time after an injection filling of molten metal;

a pressure-increasing opening/closing valve installed between the pressure-increasing accumulator and the

injection cylinder and releasing/shutting off a flow of hydraulic oil from the pressure-increasing accumulator to the injection cylinder;

a pressure-increasing time adjusting valve installed in series to the pressure-increasing opening/closing valve between the pressure-increasing accumulator and the injection cylinder and adjusting a pressure-increasing time of injected molten metal by changing its opening degree;

a hydraulic pump that communicate fluidically with the head chamber and the rod chamber of the injection cylinder; and

the injection switching valve installed between the hydraulic pump and the injection cylinder and switching between guiding a flow of hydraulic oil from the hydraulic pump to the head chamber of the injection cylinder and guiding it to the rod chamber, wherein

in the low-speed injection step, the hydraulic oil is supplied by the hydraulic pump to the head chamber of the injection cylinder to move forward the piston of the injection cylinder toward the mold, wherein

the fast injection step further comprises a procedure for controlling an opening degree of the fast speed adjusting valve, wherein

after the fast injection step, a pressure-increasing step is performed, and wherein

the pressure-increasing step comprises:

a procedure for closing the fast speed adjusting valve;

a procedure for opening the pressure-increasing opening/closing valve; and

a procedure for holding an open state of the pressure-increasing opening/closing valve until a predetermined pressure is reached.

* * * * *