Nov. 12, 1968 R. P. SNYDER 3,410,034

FLEXIBLE ABRASIVE WHEEL AND METHOD OF MAKING

Filed Feb. 28, 1966

FIG. 1

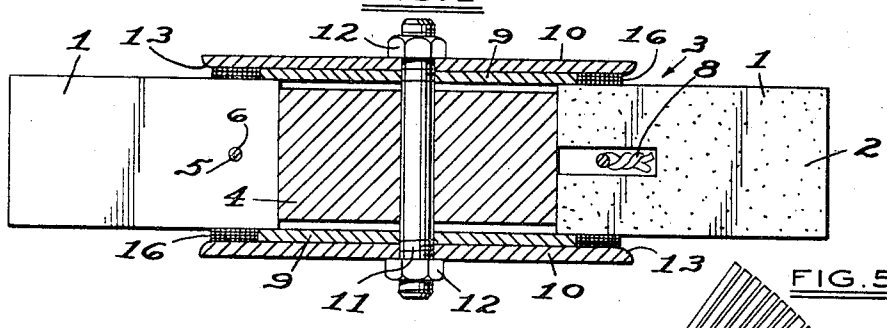

FIG. 5

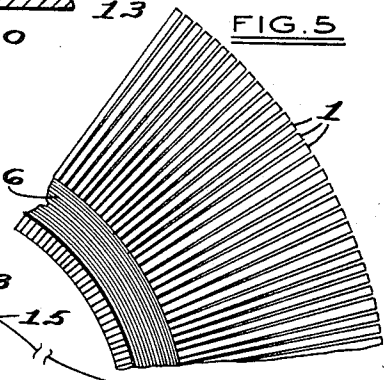

FIG. 2

FIG. 3

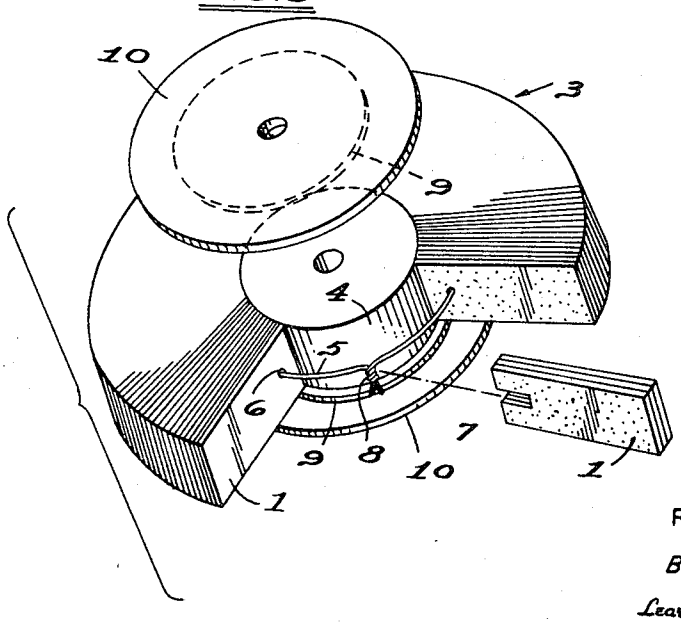

FIG. 4

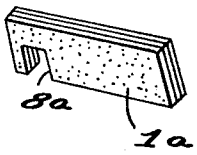

INVENTOR
ROBERT P. SNYDER
BY
Learman, Learman & McCulloch
ATTORNEYS

United States Patent Office 3,410,034
Patented Nov. 12, 1968

3,410,034

FLEXIBLE ABRASIVE WHEEL AND METHOD OF MAKING

Robert P. Snyder, 247 Snow St.,
Saginaw, Mich. 48602

Filed Feb. 28, 1966, Ser. No. 530,709
17 Claims. (Cl. 51—336)

ABSTRACT OF THE DISCLOSURE

A flexible abrasive wheel having a plurality of abrasive strips arranged to form an annulus having on each side thereof between the inner and outer peripheries of the annulus an adhesive roving wound upon itself to form a ring, the convolutions being wound under tension such as to cause the adhesive to be forced between adjacent abrasive strips whereby the strips are bonded to one another and to the ring.

This invention relates to flexible abrasive wheels and to methods of their manufacture, and more particularly to a flexible abrasive wheel of simplified construction wherein a plurality of individual abrasive leaves or strips is arranged and held in annular form.

An object of the invention is to provide a flexible abrasive wheel of greatly simplified construction, and which sacrifices none of the advantageous characteristics of flexible abrasive wheels of more complicated constructions.

Another object of the invention is to provide a method of making a flexible abrasive wheel of the character described and which is considerably more economical and rapid than methods heretofore in use.

A further object of the invention is to provide a flexible abrasive wheel construction which readily lends itself to simplified production techniques requiring little or no skilled labor.

Other objects and advantages of the invention will be pointed out specifically or will become apparent from the following description when it is considered in conjunction with the appended claims and the accompanying drawings, in which:

FIGURE 1 is a transverse sectional view of an abrasive wheel formed in accordance with the invention and prior to the disassembly of the wheel from supporting apparatus used in the manufacture of the wheel;

FIGURE 2 is a diagrammatic view illustrating the process of manufacturing the wheel;

FIGURE 3 is an exploded, fragmentary perspective view of a wheel and illustrating a preliminary stage in the assembly of the individual abrasive strips;

FIGURE 4 is a perspective view of a modified abrasive strip; and

FIGURE 5 is an elevational view of a completed abrasive wheel, on a reduced scale.

An abrasive wheel constructed in accordance with the invention is composed of a plurality of strips or leaves **1** of generally rectangular configuration, at least one surface of each of which has an abrasive surface **2**. Initially, the strips **1** are independent of one another but are adapted to be assembled to form an annulus **3** having a central axis of rotation from which each of the leaves extends radially and with the abrasive surface of each strip facing in the same direction.

To form the annulus **3**, a cylindrical form or disk **4** may be placed on any suitable support (not shown) and around which is looped an anchor member **5** such as a wire, cord, strap, or the like. The "drawstring" wire **5** is threaded through an opening formed in each of the leaves **1**. In nearly all of the leaves **1** the opening is merely a round opening **6**, but in some of the leaves the openings may comprise slots **7** extending outwardly from the radially inner ends of such leaves for a purpose presently to be explained.

When sufficient leaves **1** have been threaded on the anchor member **5** to form substantially a complete annulus, the opposite ends of the anchor member **5** are joined together in a suitable manner such as by twisting, indicated at **8**, or by knotting them, and the twisted or knotted ends arranged so as to project radially outwardly. Those filler leaves **1** in which the slots **7** are formed then may be assembled radially with the other leaves and with the twisted ends **8** accommodated in the slots **7**, thereby completing the annulus **3**.

While the foregoing method of forming the annulus is preferred and claimed as novel, it would be possible to secure the opposite ends of the anchor member **5** in other ways. For example, the two ends of the wire or strap could be overlapped and spot welded to one another, in which case leaves **1***a* provided with notches **8***a* open to one side thereof could be assembled with the remaining leaves so as to accommodate the overlapped ends of the wire or strap in the notches **8***a*.

Following the assembly of the leaves into annular form, a pair of side plates **9** is applied to opposite sides of the annulus. A retaining plate **10** is placed in face-to-face engagement with each of the members **9**, and the entire assembly is clamped together by means of a bolt **11** which passes through the disk **4** and through each of the plates **9** and **10**, the ends of the bolt being threaded for the accommodation of nuts **12**.

As is best shown in FIGURES 1 and 3, the diameter of each plate **9** which preferably is fabricated of a plastic such as Teflon or polyethylene, is greater than the diameter of the disk **4** so that the peripheral edge of each plate **9** overlies the radially inner end of each leaf **1**. The diameter of each plate **10** is greater than the diameter of the plates **9** so that the peripheral edge of each plate **10** extends beyond the peripheral edge of each plate **9** and parallels the side edges of the leaves **1**. An annular space is thus provided between the inner surface of each plate **10** and the adjacent side edge of the leaves **1**. Preferably, the inner surface of each plate **10** at its outer end is tapered or beveled as at **13**.

Following the assembly of the leaves **1** with the holding members **4**, **9**, **10**, **11** and **12**, and the clamping of the plates **9** and **10** against the leaves, the anchor member **5** may be cut and removed, but this is not essential. If desired, more than one anchor member **5** may be provided, but this, too, is not essential.

Following the assembly of the leaves and the holding means, the assembly may be supported on a conventional mandrel (not shown) for rotation about the axis of the annulus **3**. Adjacent the mandrel is a drum or spool of continuous filamentary material such as fiber glass roving, the leading end of a strand **15** of which may be introduced to the space between one of the plates **10** and the annulus

3 in such manner that rotation of the annulus 3 counterclockwise as viewed in FIGURE 2 will cause the strand 15 to be wound upon itself to form a ring 16 having an axial width corresponding to the distance between the annulus 3 and the inner surface of the adjacent plate 10 and having a radial thickness corresponding substantially to the difference in the radii between the plates 9 and 10. The roving used may be that manufactured by Owens Corning Fiberglas Company and designated 825–60 end. It may comprise 60 side by side strands of 204 side by side filaments each, the filaments or fibers being in the nature of .0003–.0004" in diameter, and suitable binding agents being employed to maintain the roving as a unitary body. If the leaves 1*a* are used, the radial length of the ring 16 should be greater than the radial length of the notch 8 so that the latter may be wholly within the confines of the ring.

The strand 15 preferably is coated with an adhesive or binding agent prior to being wound to form the ring 16. The adhesive coating can be applied in any one of a number of ways, such as by passing the strand around pulleys 17, 18, and 19 which are so arranged as to cause the strand to pass through a liquid adhesive 20 contained in a tank 21. The adhesively coated strand 15 is then wound upon itself to form the ring 16. Successive convolutions of the strand 15 will be bonded to each other and to the adjacent side edges ofthe leaves 1. Preferably, the tension on the strand 15 during winding of the ring 16 will be such as to cause the adhesive to be squeezed whereupon it may penetrate between adjacent leaves 1 to a depth of about 1/16 inch. Such tensioning of the strand 15 may be assured by a pair of relatively movable, spring pressed blocks 22 and 23 mounted on suitable supports 24 and 25, respectively, and in snubbing engagement with the strand 15.

Following winding of a ring 16 at one side of the annulus 3, the latter, together with the holding members, may be reversed in the mandrel so as to wind a similar ring 16 at its opposite side. Alternatively, both rings 16 may be wound simultaneously from two spools 14.

Upon completing the winding of the two retaining rings 16, the assembly may be removed from the mandrel and the adhesive permitted to cure. The curing procedure will depend upon the kind of adhesive utilized. Heating will speed up the process. In the preferred embodiment, the adhesive comprises a polyester resin catalyzed with methyl ethyl ketone peroxide. One suitable polyester resin is that designated MR 37 CX and distributed by Cadillac Plastic & Chemical Company. It will be understood, however, that other resins, such as epoxy and phenolic, can be used in lieu of polyesters.

It is not essential that the roving be passed through a bath of liquid adhesive. The Minnesota Mining & Manufacturing Company currently manufactures an epoxy resin impregnated glass fiber roving which is activated and cured by heating. This roving can be wound to form the rings 16 and the assembly subsequently cured according to the specifications of the roving manufacturer so as to bond the convolutions of the roving to one another and to the leaves 1.

Following the curing of the rings 16, the plates 9 and 10 may be removed from the assembly. To facilitate removal of the plates 9 and 10, the plates 9 preferably are formed of polytetrafluoroethylene and the plates 10 preferably are wax-coated steel.

The abrasive wheel, consisting of the annular pack of leaves 1, the rings 16, and the anchor wire 5 (if the latter has not previously been removed) may be clamped in a conventional manner on a rotatable arbor for use. The flaps or strips are bonded on each side to a ring of continuously wound fiber glass roving impregnated with cured resin and will have the strength to best resist the centrifugal forces of the rotating wheel.

If desired, the disk 4 may be removed from the center of the annulus 3 after the anchor member 5 is secured.

That is, the disk 4 is not essential in the manufacture of the abrasive wheel after the annulus of leaves has been formed. Moreover, the radially inner ends of the leaves could be painted or coated with the adhesive, if desired, but such process is not essential.

The foregoing disclosure is representative of presently preferred methods and apparatus but is intended to be illustrative rather than definitive of the invention. The invention is defined in the claims.

I claim:

1. A flexible abrasive wheel comprising a plurality of abrasive strips assembled to form an annulus; filamentary material wound upon itself to form a ring between the inner and outer peripheries of said annulus; and adhesive means bonding convolutions of said filamentary material to one another and to said strips between the inner and outer peripheries of said annulus.

2. The construction set forth in claim 1 wherein a ring of said filamentary material is bonded to each side of said wheel.

3. The construction set forth in claim 1 wherein each of said strips has an opening therein, and including anchor means accommodated in each of said openings for maintaining said strips assembled prior to their being bonded to said ring.

4. The construction set forth in claim 1 where said annulus has an axis of rotation and said ring is coaxial therewith.

5. The construction set forth in claim 3 wherein said anchor means comprises a wire-like member having its opposite ends joined together to form a closed ring, and wherein the openings in the strips adjacent the juncture of said opposite ends are such as to enable assembly and disassembly of said adjacent strips with and from said member following the joining of its said opposite ends.

6. The construction set forth in claim 5 wherein the openings in said adjacent strips extend from the radially inner end thereof toward but terminate short of the radially outer end thereof.

7. The construction set forth in claim 5 wherein the openings in said adjacent strips extend from one side edge thereof but terminate short of the opposite edge thereof, the radial length of each of such openings being less than the radial width of said ring and being located within the confines thereof.

8. The construction set forth in claim 1 wherein said filamentary material comprises continuous glass fiber roving.

9. The construction set forth in claim 1 wherein said adhesive means comprises a resin of the class comprising polyester, epoxy and phenolic.

10. A method of making an abrasive wheel comprising assembling a plurality of abrasive strips to form an annulus; and winding adhesively coated filamentary material adjacent at least one face of said annulus between the inner and outer peripheries thereof, the convolutions of said material being bonded to one another and to the sides of said strips.

11. The method set forth in claim 10 including passing an anchor member through each of said strips during the assembly thereof.

12. The method set forth in claim 10 wherein said filamentary material is continuous and is dipped in an adhesive prior to being wound.

13. The method set forth in claim 12 wherein said filamentary material is wound under tension sufficient to cause said adhesive to be squeezed between adjacent ones of said strips.

14. The method set forth in claim 10 wherein said filamentary material is wound adjacent both faces of said annulus.

15. A method of making an abrasive wheel comprising: inserting an anchor member through an opening in each of a plurality of abrasive strips; arranging said strips in the form of an incomplete annulus and securing the ends

of the anchor member together by intertwining its ends; completing said annulus by adding abrasive strips having slots in their inner ends so that the said slots receive the portions of the anchor member adjacent the intertwined ends and mask them; and adhesively joining said strips to one another.

16. The method set forth in claim **15** in which the anchor member is wire.

17. The method set forth in claim **15** in which the ends of the anchor member are intertwined in a knot.

References Cited

UNITED STATES PATENTS

2,800,754	7/1957	Robertson	51—209
3,191,350	6/1965	Yokel	51—336
3,206,894	9/1965	Schaffner	51—336
3,241,267	3/1966	Block et al.	51—336

JAMES L. JONES, JR., *Primary Examiner.*