Sept. 30, 1930. A. MOESSINGER 1,776,921

ROTARY COMPRESSOR

Filed June 17, 1927

Fig. 1.

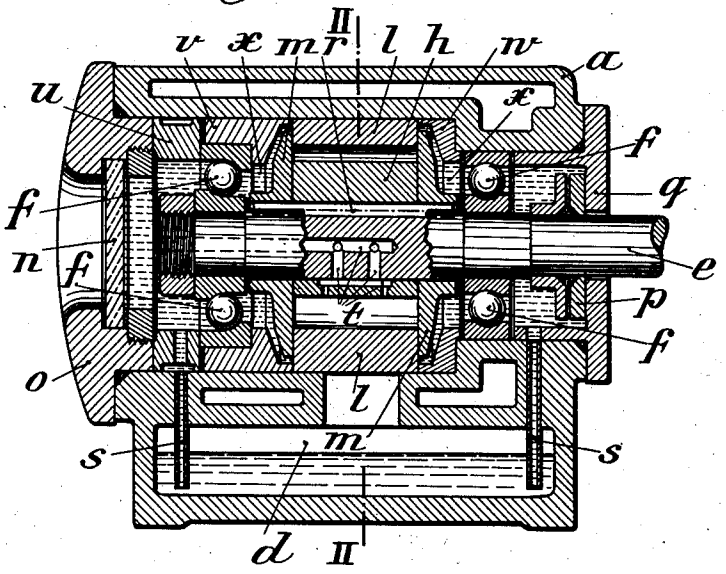

Fig. 2.

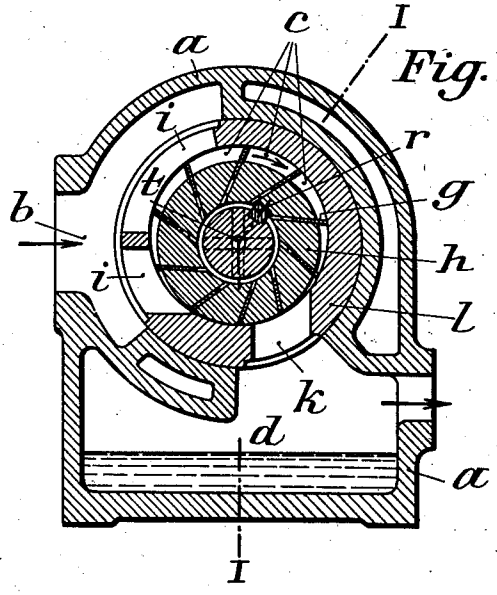

INVENTOR

Albert Moessinger

BY

Pennie, Davis, Marvin & Edmonds

ATTORNEYS

Patented Sept. 30, 1930 1,776,921

UNITED STATES PATENT OFFICE

ALBERT MOESSINGER, OF WINTERTHUR, SWITZERLAND, ASSIGNOR TO THE FIRM SULZER FRÈRES SOCIÉTÉ ANONYME, OF WINTERTHUR, SWITZERLAND

ROTARY COMPRESSOR

Application filed June 17, 1927, Serial No. 199,444, and in Switzerland July 10, 1926.

This invention relates to rotary compressors of the kind in which the compression is effected by means of the relative movement of the compressor casing and a displacement member disposed within it.

According to the present invention the lateral walls of the working space in a rotary compressor of the kind described are in the form of rotating discs, the circumferential edges of which slide in an air tight manner on the inner surface of the compressor casing. Each disc may be disposed within a chamber supplied with lubricating medium under pressure from the delivery side of the compressor, and preferably one of these chambers is connected by means of channels or ducts to the slots for the reception of the rotor vanes so that the slots are also supplied with lubricating medium under pressure.

The rotor and the discs may be free to move axially on the shaft, so that irrespective of any forces acting on the shaft they can adjust themselves automatically thereon.

The invention may be carried out in various ways but one construction according thereto is illustrated by way of example in the accompanying drawing in which

Figure 1 is a sectional elevation on the line I—I of Figure 2, and

Figure 2 is a cross-section on the line II—II of Figure 1.

In the construction illustrated in the drawing the compressor comprises a casing *a* having within it a suction chamber *b*, working space *c* and delivery chamber *d*, and a rotor *h* mounted on a shaft *e* supported in bearings *f*.

The rotor *h* which rotates in the direction of the arrow is furnished with the usual vanes *g*, and the working space *c* is bounded internally by the rotor *h*, externally by the cylindrical liner *l*, and laterally by discs *m*. The inlet ports *i* and outlet ports *k* are formed in the liner *l*. The casing is hermetically sealed at one end by the cover *o* provided with a glass inspection window *n* and at the opposite end by the end cover *q* into which is fitted a stuffing box *p*.

The lateral walls of the working chamber are not, as hitherto, a fixed or rigid part of the compressor housing but comprise rotatable discs *m*. These are loosely keyed to the rotor shaft *e* by means of a key or feather *r* in such a manner as to permit their axial movement along the rotor shaft and their circumferential edges are adapted to slide in an air tight manner on the inner surface of the cylindrical liner. In this way the clearances which existed between the rigid lateral walls and the rotor in the constructions hitherto known are eliminated, and leakages of the medium to be compressed are prevented.

Each of the discs *m* is disposed within a chamber *x* connected to the delivery chamber of the compressor, in which lubricant collects, by means of a pipe *s*. Thus each disc is forced against the liner *l* by means of oil under a pressure equal to the delivery pressure of the compressor, so that in addition to good lubrication of the sliding surfaces of the discs, a perfect sealing is obtained.

Further the bearings *f* and the stuffing box *p* are efficiently lubricated and the sealing of the working space from the atmosphere is also improved as the gaseous medium is unable to reach any of the joints.

A portion of the lubricant forced into the left hand chamber *x* flows through a channel or duct *t* in the shaft *e* and rotor *h* to the slots which contain the vanes *g*, which it seals and lubricates. Further, the lubricant which flows over into the working space is forced back again into the delivery chamber *d* together with the compressed working medium.

The thrust produced by the pressure of the lubricant on the unbalanced end face of the shaft *e* is taken up or absorbed by the left hand ball bearing *f* which is also designed as a thrust bearing. The discs *m* together with the rotor *h* are axially movable on the shaft, so that they can adjust themselves automatically with respect to the cylindrical casing, which is sprung or held between distance pieces *u*, *v* and *w*, independently of any axial movement of the shaft due to variations in the pressure of the lubricating and sealing medium.

I claim:

1. In a rotary compressor, the combination of a casing, a liner held stationary in said

casing and forming a cylindrical chamber therein, a rotor mounted to rotate in said chamber, and discs positively mounted to rotate with said rotor and sliding on the end edges of said stationary liner, said rotor and discs being free to move axially with respect to said liner.

2. In a rotary compressor, the combination of a casing, a liner in said casing forming a cylindrical chamber therein, a shaft extending through said chamber, a rotor mounted on said shaft to rotate in said chamber, and discs mounted on said shaft so as to be positively rotated thereby and sliding on the end edges of said liner, said rotor and discs being axially movable on said shaft, whereby they can automatically align themselves with respect to said liner.

3. In a rotary compressor, the combination of a casing, a liner in said casing forming a cylindrical chamber therein, a rotor mounted to rotate in said chamber, discs mounted on said shaft so as to be positively rotated thereby and sliding on the end edges of said liner, said rotor and discs being free to move axially with respect to said liner, and means for supplying lubricant under the delivery pressure of the compressor to the outer face of each of said discs, whereby said discs are yieldingly pressed against the end edges of said liner by the pressure of said lubricant.

4. In a rotary compressor, the combination of a casing, shaft bearings in said casing, a cylindrical liner disposed in said casing concentric with said bearings, and forming a cylindrical chamber eccentric thereto, a shaft mounted in said bearings, a rotor mounted on said shaft to rotate in said chamber, and discs mounted on said shaft so as to be positively rotated thereby and sliding on the end edges of said liner, said rotor and discs being axially movable on said shaft, whereby they can automatically align themselves with respect to said liner.

5. In a rotary compressor, the combination of a casing, a shaft rotatably mounted in said casing, a liner disposed in said casing and forming a cylindrical chamber therein, a rotor having a plurality of vanes mounted on said shaft to rotate in said chamber, said shaft having axial and radial passages therein adapted to connect the inner faces of said rotor vanes with a supply of lubricating medium under pressure, discs mounted on said shaft so as to be positively rotated thereby and sliding on the end edges of said liner, said rotor and discs being axially movable on said shaft, and means for supplying lubricant under pressure to the outer face of each of said discs, whereby said discs are yieldingly pressed against the end edges of said liner by the pressure of said lubricant.

6. In a rotary compressor, the combination of a casing, a shaft rotatably mounted in said casing, a liner disposed in said casing concentric with said shaft and forming a cylindrical chamber eccentric thereto, a rotor mounted on said shaft to rotate in said chamber, discs mounted on said shaft so as to be positively rotated thereby and sliding on the end edges of said liner, said rotor and discs being axially movable on said shaft, a lubricant reservoir in said casing, said liner having a discharge port communicating with said reservoir, whereby lubricant in said reservoir is maintained under the delivery pressure of the compressor, and means for supplying lubricant from said reservoir to the outer face of each of said discs, whereby said discs are yieldingly pressed against the end edges of said liner by the pressure of the lubricant.

In testimony whereof I have affixed my signature.

ALBERT MOESSINGER.