S. T. PENNA

BOTTLE FILLING APPARATUS.

APPLICATION FILED DEC. 7, 1914.

Patented Sept. 21, 1915.

1,154,269.

Fig. 1.

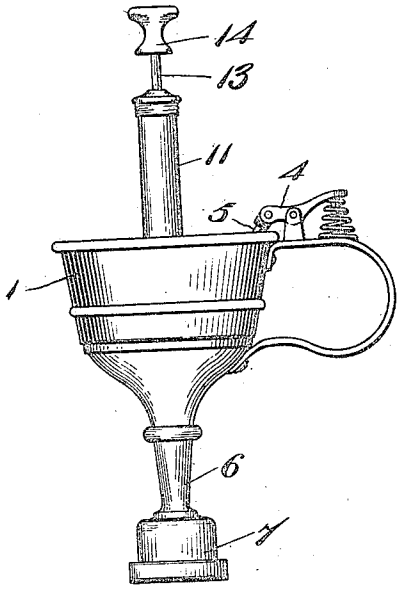

Fig. 2.

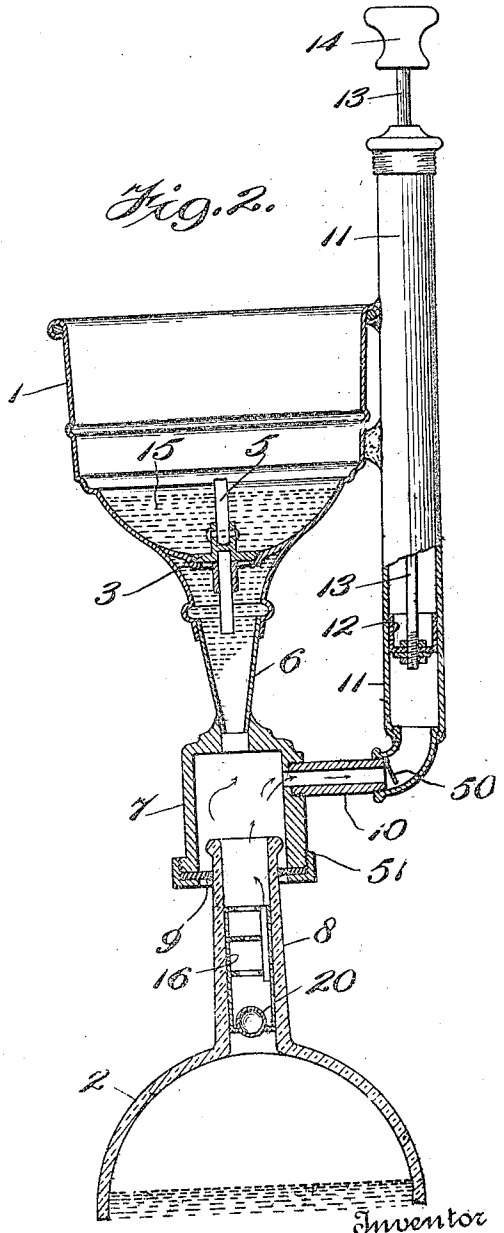

Witnesses
B. B. Collings.
F. Wm. Ernst.

Inventor
S. T. Penna by
F. Weitbrecht
Attorney

UNITED STATES PATENT OFFICE.

SAMUEL THOMAS PENNA, OF AVON-BY-THE-SEA, NEW JERSEY.

BOTTLE-FILLING APPARATUS.

1,154,269. Specification of Letters Patent. Patented Sept. 21, 1915.

Application filed December 7, 1914. Serial No. 875,891.

To all whom it may concern:

Be it known that I, SAMUEL THOMAS PENNA, a citizen of the United States, residing at Avon-by-the-Sea, in the county of Monmouth and State of New Jersey, have invented certain new and useful Improvements in Bottle-Filling Apparatus; and I do hereby declare the following to be a full, clear, and exact description of the invention, such as will enable others skilled in the art to which it appertains to make and use the same.

This invention relates to a means for filling bottles, especially adapted for filling the so called non-refillable bottles, and has for its object to provide an apparatus which will be simple in construction, efficient in action, and less costly to construct than those heretofore proposed.

With these objects in view, the invention consists in the novel details of construction and combination of parts more fully hereinafter described, and particularly pointed out in the claims.

Referring to the accompanying drawings forming a part of this specification, in which like numerals designate like parts in all the views: Figure 1 is an elevational view of an apparatus made in accordance with my invention. Fig. 2 is a longitudinal sectional view partly in elevation of the parts shown in Fig. 1, and also showing a conventional form of bottle in the act of being refilled.

1 indicates any suitable reservoir for the liquid to be placed in the bottle 2, 3 any suitable valve opening upwardly in the reservoir 1, and adapted to be conveniently manipulated as by the thumb lever 4 and connection 5, while 6 represents any suitable spout or nozzle leading from the reservoir 1 and provided with a chambered cap or head 7 adapted to tightly fit the bottle neck 8. In the drawings, I have illustrated a rubber washer or ring 9 which conveniently slips over the bottle neck 8 and forms an air tight joint therewith. Leading from the head 7 is a connection 10 to the barrel 11 of an air pump of any suitable construction, but in the form shown provided with a piston 12, a piston rod 13 and a hand operated means 14.

15 represents the liquid to be introduced into the bottle 2, and 16 represents any form of so called non-refillable device which is placed in the bottle neck 8.

A little reflection will show that no matter what the form of non-refillable device may be, in the act of pouring from the bottle it must provide for a passage of the air into the bottle, while at the same time, it provides a passage for the liquid flowing out of the bottle, or else the liquid cannot be poured from the bottle. And further it is well recognized that these non-refillable devices 16 must either be placed in the bottle after the liquid is introduced therein, or else they must be placed in the bottle neck before the liquid is introduced through the non-refillable devices. Now, if the liquid is placed in the bottle before the non-refillable devices are secured in the bottle neck, it results in a great deal of inconvenience, because in the case of whisky for example, the bottles are usually filled either at the distillery or from a large barrel or other container through bottle filling machines, and the introduction of the non-refillable devices is exceedingly inconvenient and more or less expensive after the liquor is in position, because if the non-refillable device 16 is to be fused into the bottle neck, the liquor being in the bottle is apt to cause the bottle to break. If it is merely to be cemented into the bottle neck, the cement is apt to find its way into the liquor, thus contaminating the same, or else an imperfect connection is apt to be made between the bottle and the non-refillable device so that the same may be readily removed by unscrupulous persons. In any case, it requires time and skilled labor to properly seal the non-refillable devices 16 into the bottle neck after the liquid is introduced into the bottle. On the other hand, if the liquid is introduced into the bottle through the non-refillable device, considerable difficulty has been heretofore experienced owing to the fact that it has been proposed to immerse the bottle in a tub of liquid, then apply air pumps and other apparatus which was not only unsanitary, but was also inconvenient and expensive. Notwithstanding the recognized desirably of first securely sealing in the non-refillable devices at the bottle factory and then filling the bottles at the distillery or elsewhere, no simple device seems to have been heretofore produced.

My invention avoids the above difficulties by providing a simple means of filling the so called non refillable bottles at any place desired, and in a thoroughly sanitary and inexpensive manner, after the refilling device is in place. That is to say when the dis-

2

tiller, or wholesaler for example, wishes to fill his bottles ready for sending out to the trade, it is only necessary for him to provide the bottles with their non-refillable devices such as 16, already fused or otherwise firmly secured in the bottle necks 8. The reservoir such as 1 is thereupon partially filled with the liquid to be introduced, the piston 12 is brought down to the lower end of the barrel 11, and the valve 3 is raised through the connection 5 and thumb lever 4, whereupon the liquid flows down and strikes the valve 20. The liquid next reaches the chamber in the head 7 and enters as much of the connection 10 and air pump 11 as the trapped air will permit. The valve 3 is now permitted to close, whereupon all pressure from the reservoir 1 is taken off the liquid thus segregated in the bottle neck 8. The piston 12 of the air pump is now raised, which of course, rarefies the air above the liquid in the bottle neck and its connections, and causes the air in the bottle 2 to expand, and thereupon lift the valve or other obstruction 20, so that the segregated liquid in the neck 8 may pass down on one side of said valve while the air in the bottle 2, passes up on the other side of said valve. If there is a float valve in the non-refillable devices 16, it of necessity is of such a construction that it will not prevent liquid from passing out of the bottle, and when subjected to the action of the air pump above disclosed, it of necessity must permit more or less liquid to pass down into the bottle. When liquid has ceased to flow into the bottle and the piston 12 has completed its full up stroke, if all the liquid in the bottle neck has not for any reason, passed down into the bottle, the piston 12 may be pushed downward so as to clear the barrel 11 of air either by permitting it to escape past the piston 12, thus closing the check valve 50, or if no such valve is used, by forcing the same up past the valve 3, and into the reservoir 1. The piston being thus again at the bottom of the barrel 11, it is raised a second time, whereupon still more liquid will flow into the bottle 2. In other words, by moving the piston 12 up and down no matter what the construction of the non-refillable device 16 may be, the liquid in the bottle neck 8 must eventually pass down into the bottle, while the air in the bottle 2 is being expanded to open the passage into the bottle. When the air in the bottle 2 is more or less exhausted, it is a comparatively simple matter to remove the chambered cap or head 7, shake the obstruction 20 from its seat, and allow the bottle to fill up again with air, whereupon the head 7 is replaced, the valve 3 again opened, and the process repeated until the bottle is entirely filled.

51 designates a convenient screw fastening means to enable the washer 9 to be replaced when desired.

What I claim is:—

1. In an apparatus for filling a bottle provided with a check valve in its neck, the combination of a reservoir; a filling head provided with a chamber adapted to fit a bottle neck; a connection between said reservoir and head; a valve controlling said connection; an air pump; a connection between the chamber of said head and said pump; a valve in said last named connection; and means adapted to be operated by hand for opening and closing said first named valve to permit liquid to fill said chamber and neck, whereby upon operating said pump said check valve will be lifted and said liquid will pass into said bottle; substantially as described.

2. In an apparatus for filling a bottle provided with a check valve in its neck, the combination of a reservoir; a valve located in the bottom of said reservoir; means for opening and closing said valve; a connection controlled by said valve leading from said reservoir; a bottle filling head provided with a chamber adapted to fit a bottle neck and secured to said connection; a second connection leading from the chamber of said bottle filling head; an air pump joined to said second connection; and a check valve in said second connection; substantially as described.

In testimony whereof I affix my signature, in presence of two witnesses.

SAMUEL THOMAS PENNA.

Witnesses:
ELSA K. PENNA,
ELLEN L. PENNA.