Dec. 12, 1950 A. A. KOSKINEN 2,533,817

TOGGLE ACTUATED, SLIDABLE JAW WRENCH

Filed March 24, 1947 2 Sheets-Sheet 1

Fig. 1.

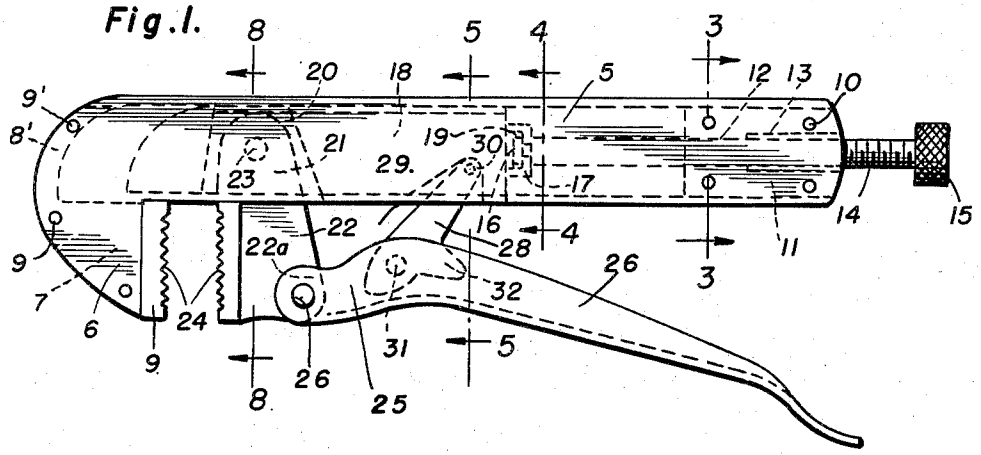

Fig. 2.

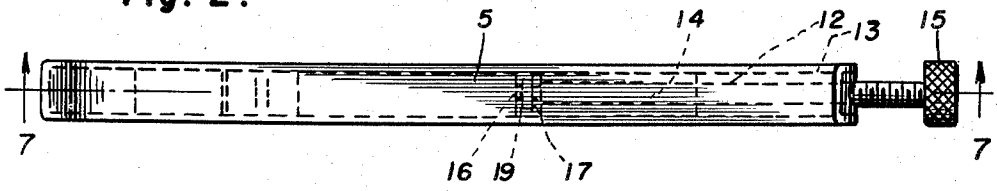

Fig. 3.

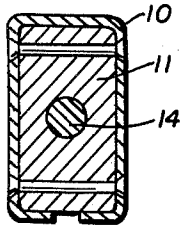

Fig. 4.

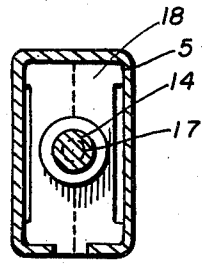

Fig. 5.

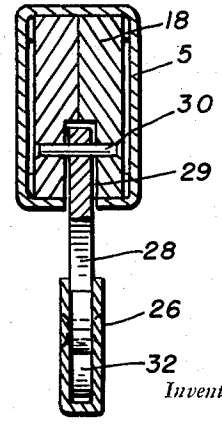

Fig. 6.

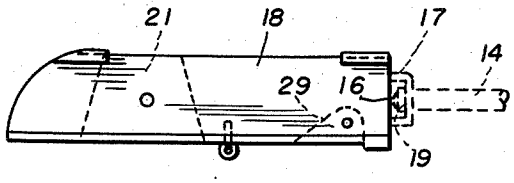

Inventor

Arthur A. Koskinen

By Clarence A. O'Brien and Harvey B. Jacobson

Attorneys

Dec. 12, 1950 A. A. KOSKINEN 2,533,817

TOGGLE ACTUATED, SLIDABLE JAW WRENCH

Filed March 24, 1947 2 Sheets-Sheet 2

Fig. 7.

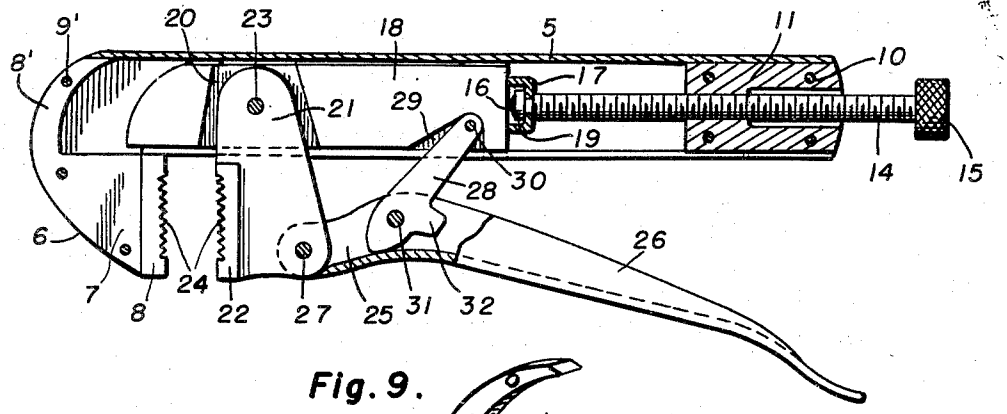

Fig. 9.

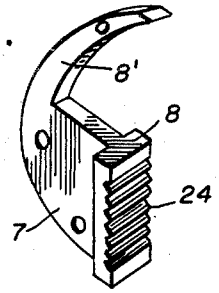

Fig. 8.

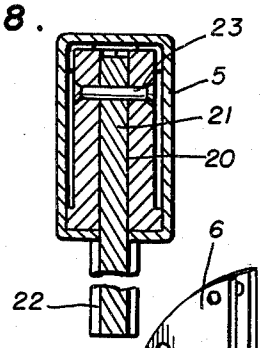

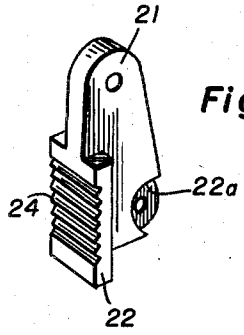

Fig. 10.

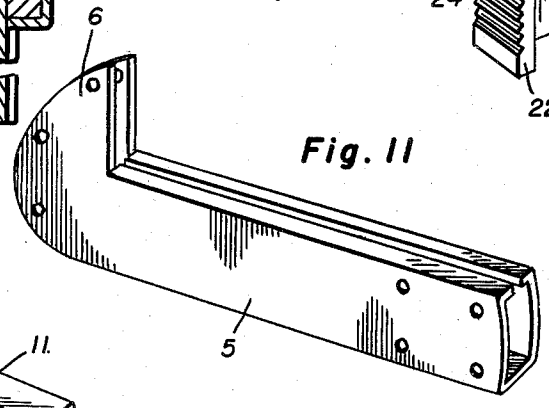

Fig. 11

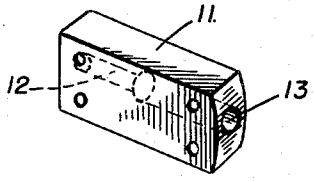

Fig. 12.

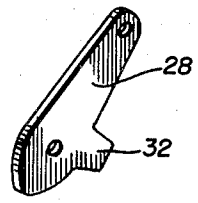

Fig. 13.

Inventor

Arthur A. Koskinen

By Clarence A. O'Brien and Harvey B. Jacobson

Attorneys

Patented Dec. 12, 1950 2,533,817

UNITED STATES PATENT OFFICE

2,533,817

TOGGLE ACTUATED SLIDABLE JAW WRENCH

Arthur A. Koskinen, Sacramento, Calif.

Application March 24, 1947, Serial No. 736,877

2 Claims. (Cl. 81—84)

1

This invention relates to new and useful improvements in wrenches and more particularly to clamp wrenches.

The primary feature of the present invention is to provide a sliding-jaw wrench so constructed that the jaw may be quickly thrown into and out of working position to be used for tightening or loosening various size nuts or the like.

Another important feature of the present invention is to provide a wrench of the character referred to including a movable handle which is pivoted at one end to a sliding jaw whereby, as the movable handle is gripped and moved toward a fixed handle, the movable jaw extends toward a fixed jaw at one end of the fixed handle.

A further feature of the present invention is to provide a clamp wrench of the class described and including screw-threaded adjusting means for an approximate adjustment between the fixed jaw and the sliding jaw.

A still further feature of the present invention is to provide a clamp wrench that is simple and practical in construction, efficient and reliable in use, relatively inexpensive to manufacture and otherwise well adapted for the purposes for which the same is intended.

Other objects and advantages reside in the details of construction and operation as more fully hereinafter described and claimed, reference being had to the accompanying drawings forming part hereof, wherein like numerals refer to like parts throughout, and in which:

Figure 1 is a side elevational view of the clamp wrench constructed in accordance with the present invention.

Figure 2 is a top plan view thereof.

Figure 3 is an enlarged sectional view taken on line 3—3 of Figure 1.

Figure 4 is an enlarged sectional view taken on line 4—4 of Figure 1.

Figure 5 is an enlarged sectional view taken on line 5—5 of Figure 1.

Figure 6 is a side elevational view of the traveling block removed from the fixed handle.

Figure 7 is a longitudinal sectional view taken on line 7—7 of Figure 2.

Figure 8 is an enlarged sectional view taken on line 8—8 of Figure 1.

Figure 9 is a perspective view of the fixed jaw.

Figure 10 is a perspective view of the sliding jaw.

Figure 11 is a perspective view of the fixed handle.

Figure 12 is a perspective view of the screw thread rod holding block.

2

Figure 13 is a perspective view of the connecting link between the movable handle and the traveling block.

Referring now to the drawings in detail, wherein for the purpose of illustration, I have disclosed a preferred embodiment of the present invention, the numeral 5 represents an elongated channel-shaped, fixed handle having a forwardly disposed hollow arm 6.

Extending between the sides of the forwardly disposed arm 6 is the substantially flat triangular inner portion 7 of a fixed jaw designated generally by the numeral 8, and said inner portion is detachably secured to arm 6 by rivets or the like 9.

An arcuate trailing arm 8' forming an integral part of portion 7 is adapted to conform to the curvature of the forward end of the handle and said arm 8' is secured as at 9' to the handle to further fix and strengthen the jaw 8.

Held fixed in the opposite end of handle 5 from arm 6 by fastening means 10 is a fixed block 11 having an internally threaded bore 12 at one end and an enlarged smooth bore 13 communicating with bore 12 at the other end.

A screw-threaded rod 14 adjustable in block 11 has a finger-gripping knob 15 at its outer end, and the inner decreased threaded end 16 of said screw is extended loosely through an annular bracket 17 at the rear end of a traveling block 18 and held thereto by a flange or bead 19 fitted on end 16 so as to make a swivel connection between the rod 14 and the traveling block 18.

The forward end of traveling block 18 is provided with a vertical recess 20 adapted to receive the flattened inner end 21 of the sliding jaw 22 which is pivoted to block 18 and in recess 20 by rivet or the like 23.

The confronting faces of jaws 8 and 22 are serrated, toothed, or otherwise formed as at 24 to grip a nut or the like (not shown) or whereby the device may be used as a vise.

One end 25 of a substantially channel shaped hand-gripping lever 26 is pivotally connected by a rivet or the like 27 to the reduced rear portion 22a of jaw 22, and hand lever 26 is pivotally connected to traveling block 18 by a connecting link 28 whose upper end extends into a recess 29 in the lower rear portion of block 18 and is pivoted to the block by a rivet or the like 30. The lower end of link 28 extends between the sides 25 of hand lever 26 and is pivoted thereto by a rivet or the like 31.

A stop 32 projecting rearwardly from link 28 is adapted to bear against hand lever 26 whereby

the movement of said lever is limited so as not to contact handle 5.

The recess 20 in block 18 allows a slight movement of the sliding jaw but the serrated faces of jaws 8 and 22 will be parallel while in operation due to pivots 23 and 27.

In the use of the device, jaw 22 is adjustable toward and away from fixed jaw 8 by turning screw 14 which moves traveling block 18 and also the sliding jaw.

The pivoted lever 26 is then gripped to close the same toward fixed handle 5 and the link 28 functions in a toggle action to force the movable jaw 22 forwardly in tight clamping engagement with the work.

In view of the foregoing description taken in conjunction with the accompanying drawings, it is believed that a clear understanding of the device will be quite apparent to those skilled in this art. A more detailed description is accordingly deemed unnecessary.

It is to be understood, however, that even though there is herein shown and described a preferred embodiment of the invention, the same is susceptible to certain changes fully comprehended by the spirit of the invention as herein described and within the scope of the appended claims.

What I claim as new is:

1. A pipe wrench comprising an elongated substantially rectangular housing having inner and outer end portions, a laterally projecting arm integrally formed with the outer end portion of said housing and having a central slot, a fixed jaw having a shank portion secured in the slot in said arm, a traveling block slidably mounted in said housing and including a longitudinal rib, said housing having a longitudinal slot receiving said rib, said traveling block having a recess in registry with said slot, a slidable jaw having a shank pivotally mounted in said recess and slidably received in the slot in said housing, a fixed block mounted in said housing at the inner end portion thereof and including an internally threaded, longitudinal bore, a feed screw receivably engaging said bore, means swiveling said feed screw to said block, a channel shaped lever having a bifurcated terminal pivoted to the shank of said slidable jaw, a pitman connecting said lever to said traveling block, said traveling block having a recess intermediate its ends in which one end of said pitman is pivoted, and a stop integrally formed with said pitman engaging the web portion of said handle for limiting movement of said lever toward said housing.

2. A wrench comprising an elongated housing having inner and outer ends, a block fixed within the inner end of said housing and having an internally threaded axial bore, a first jaw secured to the outer end of said housing, a slide received in said housing, a screw threaded rod swiveled to said slide and threaded in said bore, a second jaw pivoted to said slide and movable with said slide, said housing having a slot slidably receiving said second jaw, a lever pivoted to said second jaw, and a pitman connecting the lever to the second jaw and extending through said slot.

ARTHUR A. KOSKINEN.

REFERENCES CITED

The following references are of record in the file of this patent:

UNITED STATES PATENTS

Number	Name	Date
395,431	Franklin	Jan. 1, 1889
1,586,513	Anderson	June 1, 1926
2,299,454	Borchers	Oct. 20, 1942
2,312,947	Westman	Mar. 2, 1943
2,379,107	Scheck	June 26, 1945
2,452,625	Alpers	Nov. 2, 1948