US 20110260588A1

(19) **United States**

(12) **Patent Application Publication**

(10) **Pub. No.: US 2011/0260588 A1**

(43) **Pub. Date: Oct. 27, 2011**

LIN

(54) **TOOL CABINET**

(76) Inventor: **Chia-Yun LIN**, Taichung City (TW)

(21) Appl. No.: **12/767,860**

(22) Filed: **Apr. 27, 2010**

Publication Classification

(51) **Int. Cl.**
A47B 81/00 (2006.01)

(52) **U.S. Cl.** **312/237**

(57) **ABSTRACT**

The tool cabinet has a casing, multiple protecting bars and multiple elastic slices. The casing has multiple edges. The protecting bars are respectively mounted on the edges of the casing, and each has an inner surface and a mounting recess. The mounting recess is formed in the inner surface of the protecting bar and has two sides and two inserting grooves respectively defined in the sides of the mounting recess. The elastic slices are respectively arranged on the casing near the edges and each elastic slice has two outer ends respectively inserted in the inserting grooves of the mounting recess of the corresponding protecting bar to connect the protecting bars on the casing.

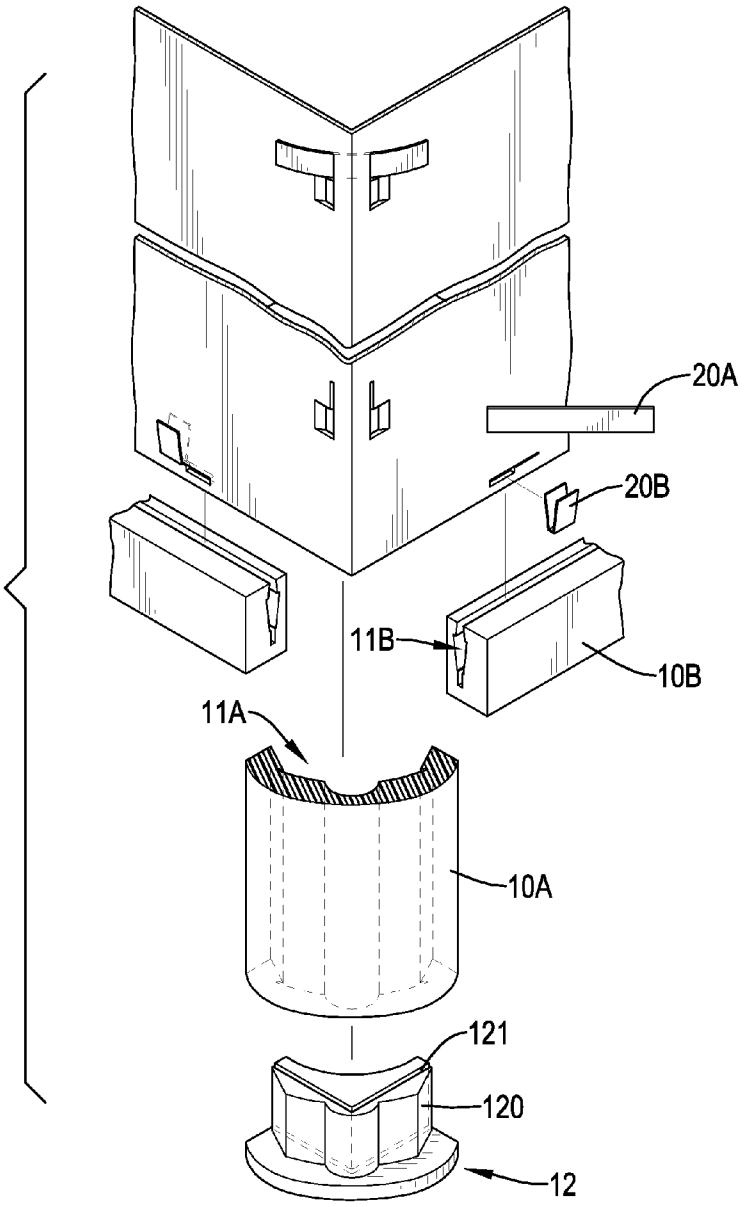

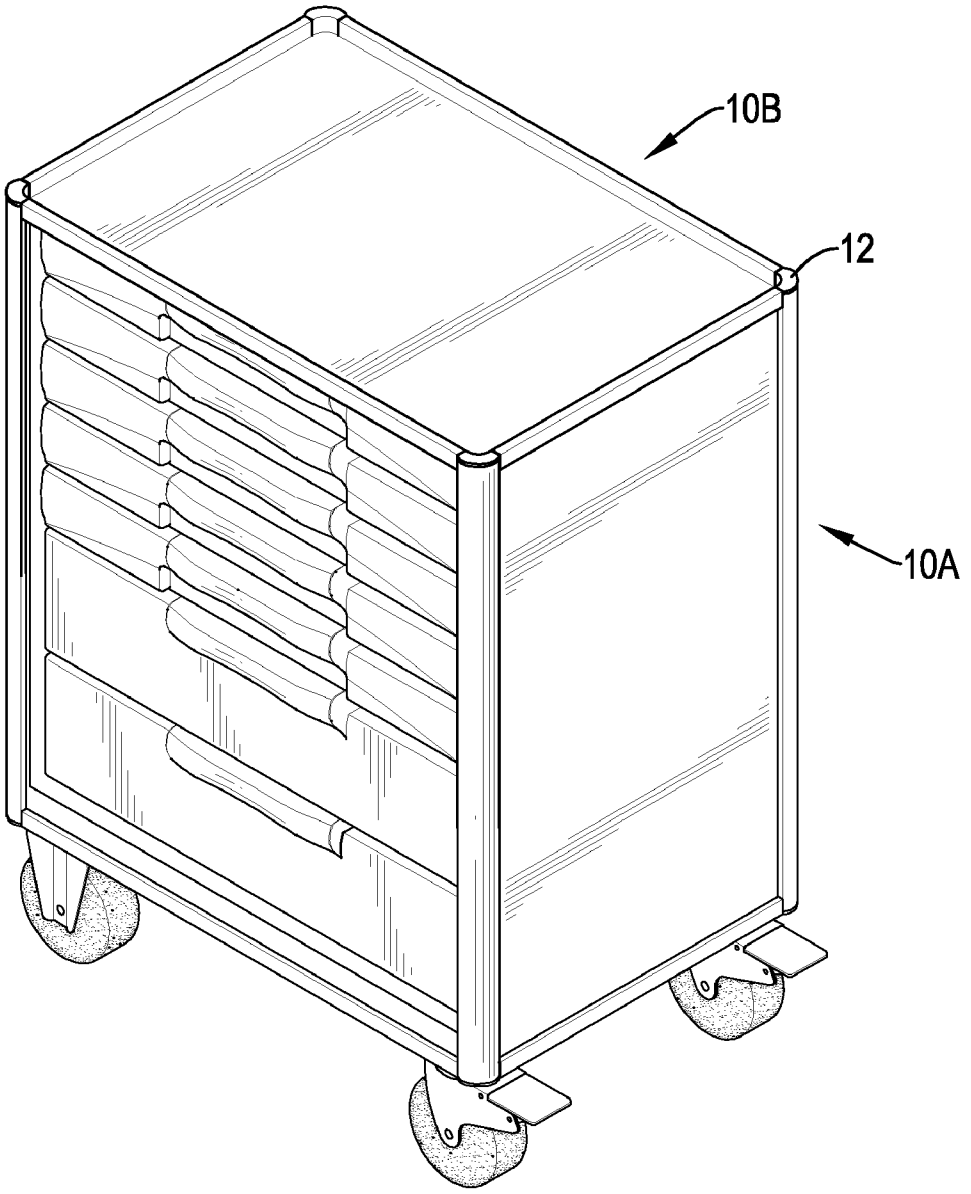

FIG.1

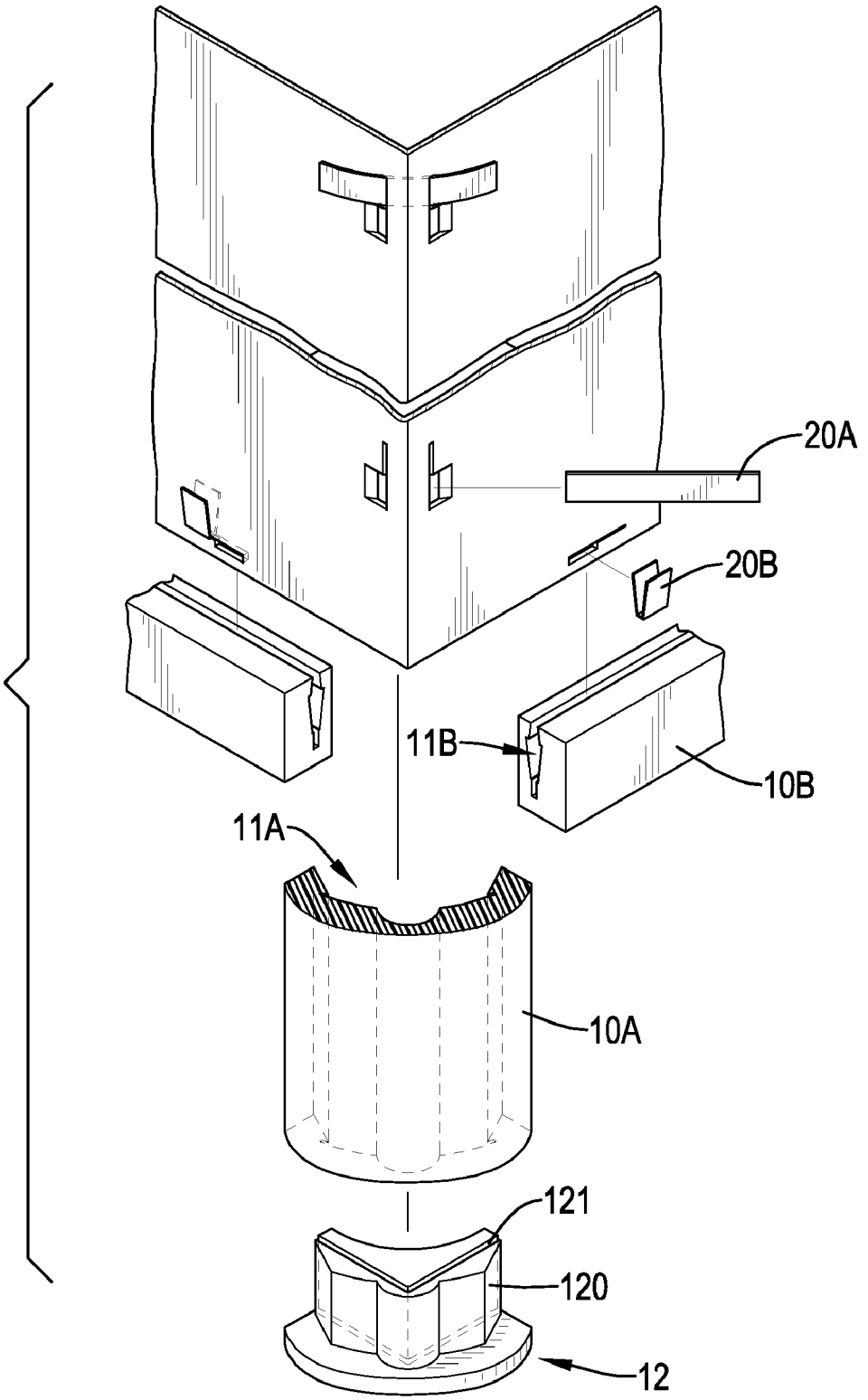

FIG.2

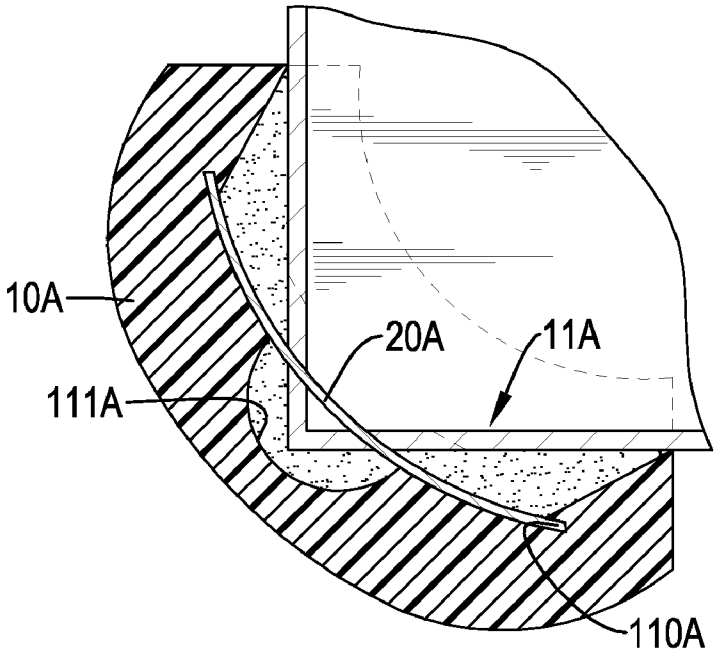

FIG.3

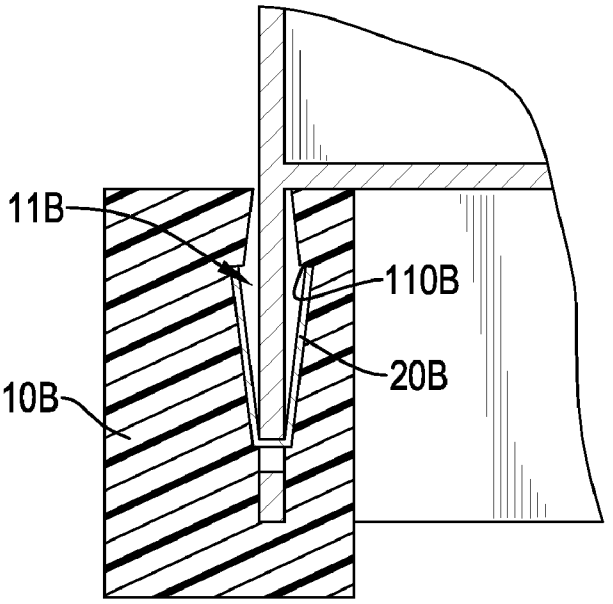

FIG.4

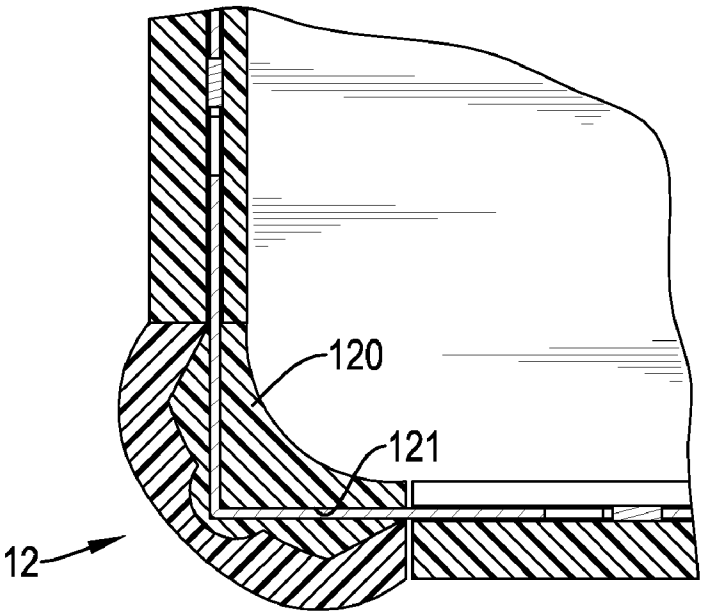

FIG.5

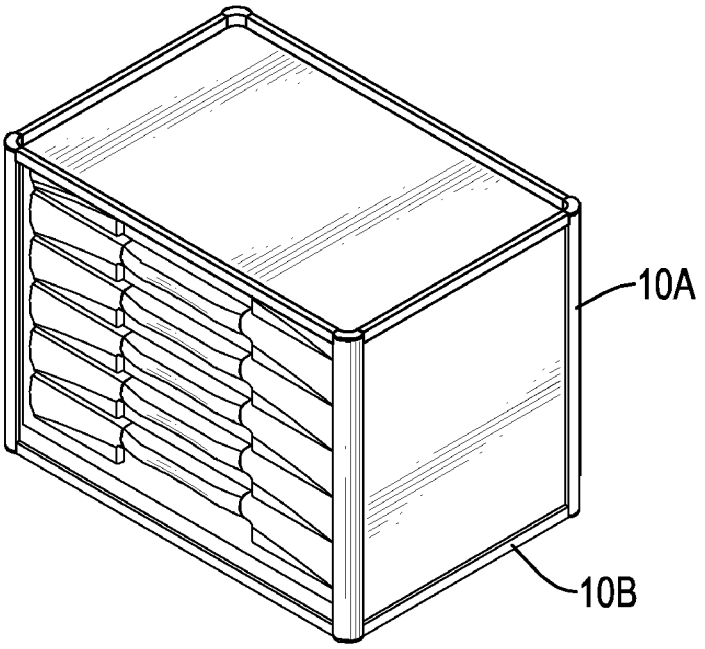

FIG.6

TOOL CABINET

BACKGROUND OF THE INVENTION

[0001] 1. Field of the Invention

[0002] The present invention relates to a tool cabinet, and more particularly to a tool cabinet having multiple protecting bars respectively mounted on multiple sharp edges of a tool car or a tool box to prevent an accident.

[0003] 2. Description of Related Art

[0004] A convention tool cabinet like a tool box or tool car has a casing shaped as a cuboid and having multiple sharp edges. If someone collides with the sharp edges of the casing incautiously, the edges may cause injury. In order to prevent injury, the casing further has multiple protecting bars respectively mounted on the sharp edges. The protecting bars are rubber or plastic and made by injection molding, and adhered to the edges.

[0005] However, the conventional protecting bars are not sufficiently stable. The protecting bars fall off easily after frequent use.

[0006] The protecting bars also may be mounted on the edges by an inserting structure. Each protecting bar has multiple ribs and multiple bolts. The ribs are formed on an inner side of the protecting bar and are inserted into the casing to cover the corresponding edge. The bolts are mounted through the protecting bar and are screwed into the casing to fix the protecting bar on the casing.

[0007] However, the conventional protecting bars provided with inserting structures are not easy to make, and the bolts are necessary for increasing the stability of the combination of the protecting bars with the casing. Therefore, the inserting structure of the protecting bars has increased manufacturing costs.

[0008] To overcome the shortcomings, the present invention tends to provide a tool cabinet to mitigate or obviate the aforementioned problems.

SUMMARY OF THE INVENTION

[0009] The main objective of the present invention is to provide a tool cabinet having multiple protecting bars respectively mounted on multiple sharp edges of a tool casing to prevent a crash accident.

[0010] The tool cabinet has a casing, multiple protecting bars and multiple elastic slices. The casing has multiple edges. The protecting bars are respectively mounted on the edges of the casing, and each has an inner surface and a mounting recess. The mounting recess is formed in the inner surface of the protecting bar and has two sides and two inserting grooves respectively defined in the sides of the mounting recess. The elastic slices are respectively mounted on the casing near the edges. Each elastic slice has two outer ends respectively inserted in the inserting grooves of the mounting recess of the corresponding protecting bar to connect the protecting bars on the casing.

[0011] Other objects, advantages and novel features of the invention will become more apparent from the following detailed description when taken in junction with the accompanying drawings.

BRIEF DESCRIPTION OF THE DRAWINGS

[0012] FIG. **1** is a perspective view of a tool cabinet in accordance with the present invention used in a tool car;

[0013] FIG. **2** is a partially exploded perspective view of the tool cabinet in FIG. **1** showing multiple protecting bars;

[0014] FIG. **3** is an enlarged top view in partial cross section of the tool cabinet in FIG. **2** showing the protecting bar mounted on a longitudinal edge of a casing;

[0015] FIG. **4** is an enlarged side view in partial cross section of the tool cabinet in FIG. **2** showing the protecting bar mounted on a transverse lower edge of a casing;

[0016] FIG. **5** is an enlarged top view in partial cross section of the tool cabinet in FIG. **2** showing a plug of the protecting bar mounted on a longitudinal edge of a casing; and

[0017] FIG. **6** is a tool cabinet in accordance with the present invention used in a tool box.

DETAILED DESCRIPTION OF PREFERRED EMBODIMENT

[0018] With reference to FIGS. **1**, **2** and **6**, a tool cabinet in accordance with the present invention is used in a tool car or tool box to provide a crash protecting effect and reduce injury. The tool cabinet has a casing, multiple protecting bars (**10**A, **10**B) and multiple elastic slices (**20**A, **20**B).

[0019] The casing is shaped as a cuboid and is implemented as four surrounded boards, a top board and a bottom board and four corners. The surrounded boards connect to each other to form as a rectangular space, and each surrounded board has a transverse upper edge and transverse lower edge. The top board and the bottom board are respectively mounted on the surrounded boards and are mounted respectively near the transverse upper edges and transverse lower edges of the surrounded boards. The corners are L-shaped and respectively defined in the adjacent surrounded boards, and each corner defines a corner top, a corner bottom and a longitudinal edge.

[0020] The protecting bars (**10**A, **10**B) are respectively mounted on the edges of the casing and have two types to adapt to the longitudinal edges and the transverse edges of the casing.

[0021] With reference to FIGS. **2**, **3** and **5**, in the first type of the protecting bars (**10**A), the protecting bars (**10**A) are respectively mounted on the longitudinal edges of the corners of the casing, and each has an inner surface, a mounting recess (**11**A) and two ends. The mounting recess (**11**A) is concave and formed in the inner surface of the protecting bar (**10**A) and has two sides, two inserting grooves (**110**A), an inner surface and a corner recess (**111**A). The inserting grooves (**110**A) are respectively defined in the sides of the mounting recess (**11**A). The corner recess (**111**A) is formed in the inner surface and between the sides of the mounting recess (**11**A). The corner recess (**111**A) is shaped as a semicircle in cross section and contains the corresponded corner of the casing.

[0022] Each protecting bar (**10**A) further has two plugs (**12**). The plugs (**12**) are detachably mounted on the ends of the protecting bar (**10**A) and respectively cover the corner top and the corner bottom of the corresponding corner of the casing. Each plug (**12**) has a base, a protruding block (**120**) and a corner groove (**121**). The protruding block (**120**) is formed on and protrudes from the base and has an end surface. The protruding block (**120**) corresponds to the mounting recess (**11**A) in shape and is mounted in the mounting recess (**11**A) of the protecting bar (**10**A). The corner groove (**121**) is L-shaped and formed in the end surface of the protruding block (**120**) and holds one of the corner top and the corner bottom of the corner of the casing.

[0023] With reference to FIGS. **2** and **4**, in the second type of the protecting bars (**10**B), the protecting bars (**10**B) are respectively mounted on the transverse upper and lower edges of the casing. Each protecting bar (**10**B) has two ends, an inner surface and a mounting recess (**11**B). The ends of the protecting bar (**10**B) abut respectively the adjacent protecting bars (**10**A). The mounting recess (**11**B) is V-shaped and formed in the inner surface of the protecting bar (**10**B) and has two outer sides, two ribs and two inserting grooves (**110**B). The ribs respectively protrude from the outer sides of the mounting recess (**11**B) and face to each other. The inserting grooves (**110**B) are respectively defined between the sides of the mounting recess (**11**B) and the ribs.

[0024] The elastic slices (**20**A, **20**B) may be detachable and respectively inserted through the boards of the casing and may be fixed on and punched out from the boards of the casing to mount the protecting bars (**10**A, **10**B) onto the casing. The elastic slices (**20**A, **20**B) have two types to adapt to the longitudinal edges and the transverse upper and lower edges of the casing.

[0025] The elastic slices (**20**A) in the first type adapt to the longitudinal edges of the casing. The elastic slices (**20**A) are rectangular and inserted through the adjacent surrounded boards near the longitudinal edges of the casing. Each elastic slice (**20**A) has two outer ends respectively inserted in the inserting grooves (**110**A) of the mounting recess (**11**A) of the protecting bar (**10**A) to connect the protecting bar (**10**A) and the casing.

[0026] The elastic slices (**20**B) in the second type adapt to the transverse edges of the casing. The elastic slices (**20**B) are V-shaped and inserted through the surrounded boards near the transverse edges of the casing. Each elastic slice (**20**B) has two outer ends respectively inserted in the inserting grooves (**110**B) of the mounting recess (**11**B) of the protecting bar (**10**B) to connect the protecting bars (**10**B) to the 1 transverse edges of the casing.

[0027] In use, the elastic slices (**20**A) are respectively inserted through the adjacent surrounded boards near the longitudinal edges of the casing. The protecting bars (**10**A) are attached to and cover the longitudinal edges of the casing and are then pressed to make the outer ends of the elastic slices (**20**A) being inserted into the inserting grooves (**110**A) of the mounting recess (**11**A) of the corresponded protecting bar (**10**A). The plugs (**12**) are respectively mounted on the ends of the corresponded protecting bar (**10**A) and hold the corner top and the corner bottom end of the corresponded corner of the casing inside. The elastic slices (**20**B) are respectively inserted through the surrounded boards near the transverse edges of the casing. The protecting bars (**10**B) are attached to and cover the transverse edges of the casing and are then pressed to make the outer ends of the elastic slices (**20**B) being inserted into the inserting grooves (**110**B) of the mounting recess (**11**B) of the corresponded protecting bar (**10**B).

[0028] The elastic slices (**20**A, **20**B) have simple shapes and are made easily and economically. The protecting bars (**10**A, **10**B) are mounted on the edges of the casing easily and connect on the casing stability by the elastic slices (**20**A, **20**B). Consequently, the tool cabinet comprising the protecting bars (**10**A, **10**B) provides a protecting effect and prevents injury. The elastic slices (**20**A, **20**B) make the processes of assembling the protecting bars (**10**A, **10**B) onto a casing easy and reduce manufacturing costs.

[0029] Even though numerous characteristics and advantages of the present invention have been set forth in the foregoing description, together with details of the structure and function of the invention, the disclosure is illustrative only. Changes may be made in detail, especially in matters of shape, size and arrangement of parts within the principles of the invention to the full extent indicated by the broad general meaning of the terms in which the appended claims are expressed.

What is claimed is:

1. A tool cabinet comprising:
a casing having
multiple longitudinal edges; and
multiple transverse edges;
the multiple protecting bars respectively mounted on the longitudinal edges and the transverse edges of the casing, and each protecting bar having
an inner surface;
a mounting recess formed in the inner surface of the protecting bar and having
two sides; and
two inserting grooves respectively defined in the sides of the mounting recess; and
multiple elastic slices respectively mounted on the casing near the longitudinal edges and the transverse edges, and each elastic slice having
two outer ends respectively inserted in the inserting grooves of the mounting recess of one of the protecting bars.

2. The tool cabinet as claimed in claim **1**, wherein
the casing is implemented as multiple surrounded boards, and each two adjacent surrounded boards defined a corner having the longitudinal edge;
the mounting recesses of the protecting bars mounted on the longitudinal edges of the casing are concave; and
the elastic slices mounted on the casing near the longitudinal edges are rectangular.

3. The tool cabinet as claimed in claim **2**, wherein
the protecting bars mounted on the longitudinal edges of the casing respectively have two ends and two plugs detachably mounted on the ends of the protecting bars.

4. The tool cabinet as claimed in claim **3** wherein
each corner further has a corner top and a corner bottom;
each plug further has
a base;
a protruding block formed on and protruding from the base and mounted into the mounting recess of the corresponded protecting bar and having an end surface; and
a corner groove formed in the end surface of the protruding block and holding one of the corner top and corner bottom of the corresponded corner of the casing.

5. The tool cabinet as claimed in claim **4**, wherein
the mounting recesses of the protecting bars mounted on the transverse edges of the casing are V-shaped; and
the elastic slices mounted on the casing near the transverse edges are V-shaped.

6. The tool cabinet as claimed in claim **1**, wherein
the mounting recesses of the protecting bars mounted on the transverse edges of the casing are V-shaped; and
the elastic slices mounted on the casing near the transverse edges are V-shaped.

* * * * *