Aug. 14, 1928. 1,680,470.

G. W. MUDD

PAPER FEEDING MACHINE

Filed Nov. 15, 1926

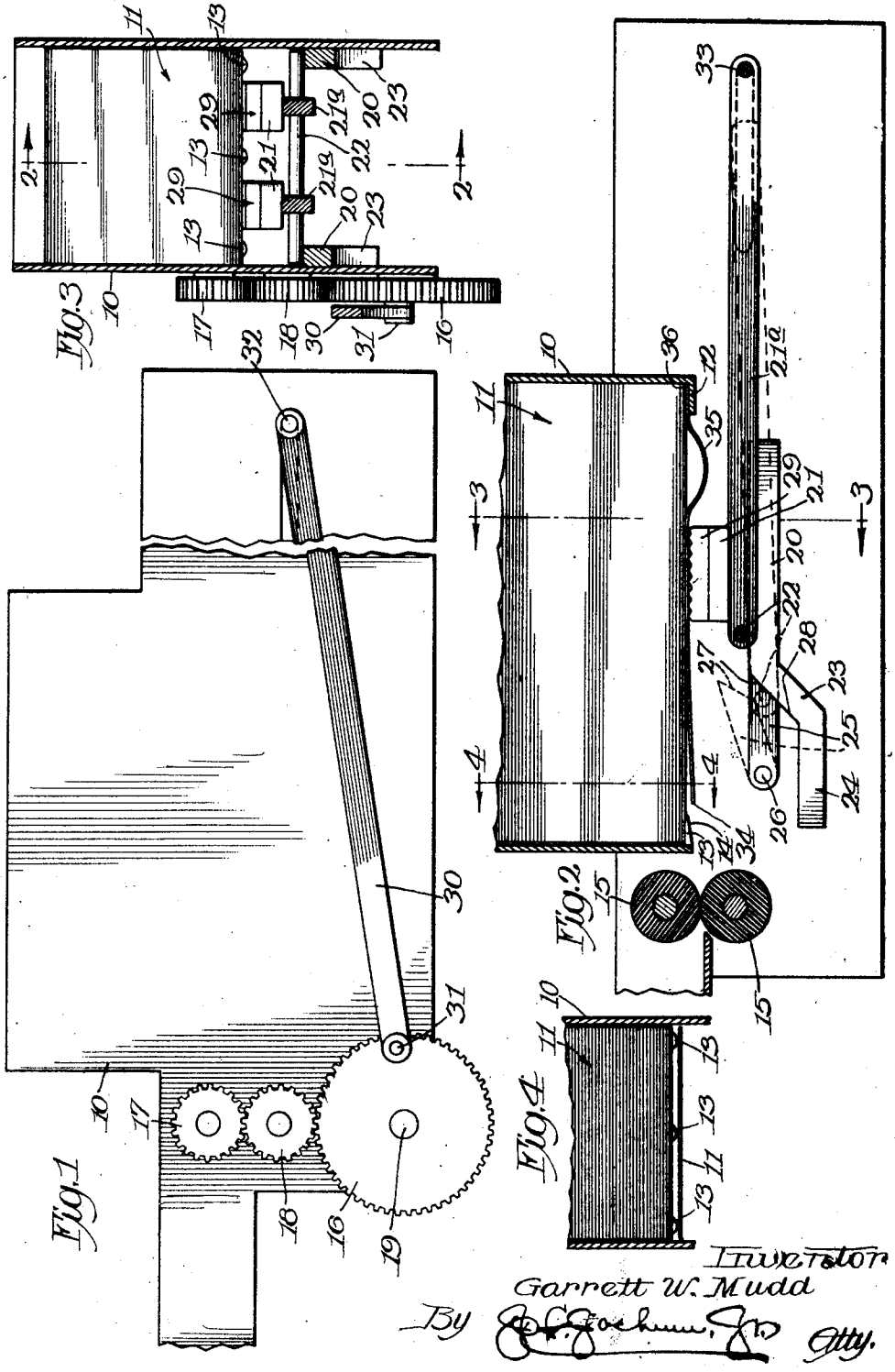

Inventor
Garrett W. Mudd
By J. C. Cochrum, Jr. Atty.

Patented Aug. 14, 1928. 1,680,470

UNITED STATES PATENT OFFICE.

GARRETT W. MUDD, OF CHICAGO, ILLINOIS.

PAPER-FEEDING MACHINE.

Application filed November 15, 1926. Serial No. 148,426.

This invention relates to improvements in paper feeding machines, and one of the objects of the invention is to provide an improved machine of this character for positively and individually feeding sheets of papers, labels, coupons or the like from the bottom of a supply or stack.

A further object is to provide an improved machine of this character which will be of a simple, durable and compact construction and effective and efficient in operation.

To the attainment of these ends and the accomplishment of other new and useful objects as will appear, the invention consists in the features of novelty in substantially the construction, combination and arrangement of the several parts hereinafter more fully described and claimed and shown in the accompanying drawing illustrating this invention, and in which

Figure 1 is a diagrammatic side elevation of a feeding mechanism of this character constructed in accordance with the principles of this invention.

Figure 2 is a vertical, longitudinal sectional view taken on line 2—2, Figure 3.

Figure 3 is a transverse, vertical sectional view taken on line 3—3, Figure 2.

Figure 4 is a detail sectional view taken on line 4—4, Figure 2.

Referring more particularly to the drawing the numeral 10 designates generally a hopper for receiving and holding a supply of labels, sheets of paper, coupons or the like. The hopper is open at the bottom and is provided with an inwardly projecting ledge or shoulder 12 upon which one edge of the supply or stack of labels rest.

At the opposite end of the bottom a plurality of inwardly projecting formations 13 which may be in the shape of pins or the like, are provided and may be spaced throughout the length of the wall of the hopper. The lower face of these formations 13 are beveled or inclined as at 14.

Arranged adjacent the hopper 10 are feed rollers 15 between which the forward edge of the label or sheet 11 which has been removed from the supply or stack, is presented.

The rollers 15 are operated in any suitable manner such as by means of gears 16—17 between which an intermeshing gear 18 is arranged.

The gear 16 is carried by a shaft 19 adapted to receive its motion from any suitable source (not shown).

Arranged beneath the hopper 10 are tracks or guides 20 upon which ejector members 21 are adapted to reciprocate.

Any number of these ejectors 21 may be provided but two are illustrated, and they are supported by means of arms or bars 21ª, through which a bar or rod 22 passes, the extremities of which latter are adapted to travel upon the guides or supports 20.

The forward edges of the guides or supports 20 are deflected downwardly as at 23 and the extremity of the downwardly deflected portion extends forwardly as at 24 and terminates in proximity to the rollers 15.

The track 20 is provided with a section 25 pivotally mounted as at 26, and the pivotally mounted portion extends rearwardly and is provided preferably with an inclined face 27 that co-operates with the inclined face 28 on the downwardly deflected portion 23 of the track or support. The top of this section 25 is adapted to assume a position coinciding with the top of the body portion or track 20 and the inclined face 27 of the section 25 co-operates with the inclined face 28 of the portion 23 of the track or guide to hold the section in position so that the ends of the bar or rod 22 may move upon the section 25.

The forwardly projecting portion 24 of the track extends beyond and is spaced below the section 25 when the latter is in the position shown in full lines in Figure 2.

The ejectors 21 are each provided with a face 29 which is preferably constructed of rubber or similar material and is corrugated so as to engage and bite the body portion of the lowermost sheet or label in the hopper 10.

The ejectors 21 are adapted to be reciprocated in any suitable manner preferably by means of a link 30 which is pivotally connected at one end as at 31 with the gear 16, and the other end of the link is pivotally connected as at 32 with the bar or rod 33 that extends across and connects the bars 21ª so that when the gear 16 is rotated a reciprocatory motion will be imparted to the ejectors 21.

The weight of the stack or pile of sheets 11 in the hopper 10 causes the lowermost sheet to engage and rest against the corrugated surface of the ejectors 21 so that when

the ejectors are in contact with the lowermost sheet and are moved rearwardly they will cause the forward extremity 34 of the sheet to be detached or moved out of engagement with the projections 13 and will also cause the body of the sheet to buckle downwardly as at 35 adjacent the other end of the hopper. As the edge 34 of the sheet passes off of the projections 13 it will drop slightly so that when the ejectors 21 are moved forwardly the edge 34 of the lowermost sheet will be presented to the bite of the rollers 15. At the same time the ejectors will withdraw the rear edge 36 of the lowermost label from the hopper. After the forward edge of the detached sheet has been engaged by the rollers 15 the sheet will be withdrawn by the action of the rollers. At the same time the lowermost sheet 11 is being advanced by the rollers 15, the ejectors 21 will be moved forwardly so as to engage the next lowermost sheet as the lower sheet is withdrawn from the top of the ejector.

During the feeding movement of the sheet by the ejector 21, the bar 22 will ride over the section 25 of the track or guide 20 until the bar 22 moves to a point beyond the forward edge of the hinged section 25. At this time the ejector will drop over the end of the section 25 until the bar 22 engages and rests upon the forwardly projecting portion 24 of the track or guide. The ejector will then be moved backwardly so that the bar 22 will move along the portion 24 of the track until it strikes the inclined portion 28. A further movement of the ejector in the same direction will cause the bar 22 to ride up the inclined portion 28 beneath the section 25 to raise the latter from the position shown in full lines in Figure 2 to the position shown in dotted lines so that the bar will pass from the inclined surface 28 on to the top of the track or guide 20.

Upon the return movement of the ejector 21 it will pass into engagement with the lowermost sheet of the pile just as it passes off of the inclined surface 28 of the track or guide so that a further movement of the ejector 21 in a rearward direction will cause the ejector to withdraw the forward edge 34 of the lowermost sheet from the pile and buckle the rearward portion of the sheet as at 35.

It will therefore be seen that by reciprocating the ejector 21 a sheet will be withdrawn, the ejector will fall so as to pass out of engagement with the sheet to allow it to be fed by the rollers, after which the ejector will travel up the inclined surface 28 so that it will again contact with the next lowermost sheet, at which time the operation will be repeated.

It will therefore be seen that with this improved construction there will be provided means for positively feeding the sheets individually from the bottom of a stack or pile.

While the preferred form of the invention has been herein shown and described, it is to be understood that various changes may be made in the details of construction and in the combination and arrangement of the several parts, within the scope of the claims, without departing from the spirit of this invention.

What is claimed as new is:—

1. A machine for feeding sheets of paper and the like embodying a holder for a supply of sheets, an ejector below and reciprocable across the bottom of said supply, an extended arm directly supporting the ejector, means pivotally mounting the arm by one end, means for causing the ejector to remove one edge of the sheet from the supply and to buckle another portion of the sheet during the movement of the ejector in one direction, and means for bodily moving the ejector in a direction toward the supply, the last said means permitting the ejector to swing away from the bottom of the supply by swinging the ejector arm about its pivot.

2. A machine for feeding sheets of paper and the like embodying a holder for a supply of sheets, an ejector below and reciprocable across said supply, a guide for holding the ejector in contact with the lowermost sheet of the supply and along which guide the ejector moves and from which guide the ejector passes, said guide embodying a shiftable section, a support below said guide and upon which the ejector moves when it passes off of the said guide, and means for directing the ejector against the said shiftable section to displace the latter to permit the ejector to pass back upon the said guide and into contact with the lowermost sheet of the said supply.

3. A machine for feeding sheets of paper and the like embodying a holder for a supply of sheets, an ejector below and reciprocable across the said supply, a guide way for holding the ejector in contact with the supply as it is reciprocated, said guide embodying a section shiftable in one direction and upon which section the said ejector is movable while operable, means for receiving the ejector after it passes off of the said section, and means for directing the ejector to the other side of and against said section to shift the latter to permit the said ejector to move back upon the said guide.

4. A machine for feeding sheets of paper and the like embodying a holder for a supply of sheets, an ejector below and reciprocable across the supply, a guide way for holding the ejector against the supply, said guide way having a pivoted section and across which section the ejector is movable in one direction, means for supporting the ejector when it passes off of the said section, the said means serving to direct the ejector

to the other side of said section, and means for directing the ejector from the last said means against the said section to swing the same about its pivot to permit the ejector to pass back upon the said guide and against the bottom of the supply.

5. A machine for feeding sheets of paper and the like embodying a holder for a supply of papers, an ejector below and movable across the said supply, a guide way having a depressed portion adjacent the limit of travel of the ejector in one direction, said guide way also embodying a pivoted section forming a continuation thereof over the said depressed portion and over which section the ejector passes, the said depressed portion serving to receive the ejector when it passes off of the said section and away from the supply, and means below the said pivoted section and intermediate the guide way and the said depressed portion thereof for directing the ejector against the said pivoted section to swing the latter about its pivot to permit the ejector to pass from the said depressed portion back upon the said guide way.

6. A machine for feeding sheets of paper and the like embodying a holder for a supply of papers, an ejector below and movable across the said supply, a guide way having a depressed portion adjacent the limit of travel of the ejector in one direction, said guide way also embodying a pivoted section forming a continuation thereof over the said depressed portion and over which section the ejector passes, the said depressed portion serving to receive the ejector when it passes off of the said section and away from the supply, and an inclined surface intermediate the guide way and the said depressed portion thereof for directing the ejector against the said section to swing the latter to permit the ejector to pass back upon the said guide way.

7. A machine for feeding sheets of paper and the like embodying a holder for a supply of papers, an ejector below and movable across the said supply, a guide way having a depressed portion adjacent the limit of travel of the ejector in one direction, said guide way also embodying a pivoted section forming a continuation thereof over the said depressed portion and over which section the ejector passes, the said depressed portion serving to receive the ejector when it passes off of the said section and away from the supply, and an inclined surface intermediate the guide way and the said depressed portion thereof for directing the ejector against the said section to swing the latter to permit the ejector to pass back upon the said guide way, the free end of the said section being inclined and co-operating with the said inclined surface for maintaining the said section against movement in one direction.

8. A machine for feeding sheets of paper and the like embodying means for supporting a supply of sheets, an ejector below and reciprocable across the bottom of the supply, an extended arm directly supporting the ejector, means pivotally supporting the arm by one end, means pivoted to the pivotal support of the extended arm for reciprocating the ejector and arm, and means for bodily moving the ejector toward the supply, the last said means operating to permit the ejector to swing away from the bottom of the supply by swinging the ejector arm about its pivot.

9. A machine for feeding sheets of paper and the like embodying a holder for a supply of sheets, an ejector reciprocable below and across the said supply, an extended arm directly supporting the ejector, means pivotally mounting said arm by one end, means for holding the ejector against the said supply during a portion of its reciprocating movement, and means permitting a bodily movement of the ejector away from and out of engagement with the supply in a direction transverse to its direction of reciprocating movement by swinging the arm about its pivot, the last said means operating to cause the ejector to again move into contact with the bottom of the said supply on the reverse movement of the ejector.

In testimony whereof I have signed my name to this specification on this 5th day of November, A. D. 1926.

GARRETT W. MUDD.