July 10, 1962 L. N. BROWN 3,043,002

METHOD AND TOOLS FOR REPAIRING MUFFLER ASSEMBLIES

Filed Oct. 5, 1959 3 Sheets-Sheet 1

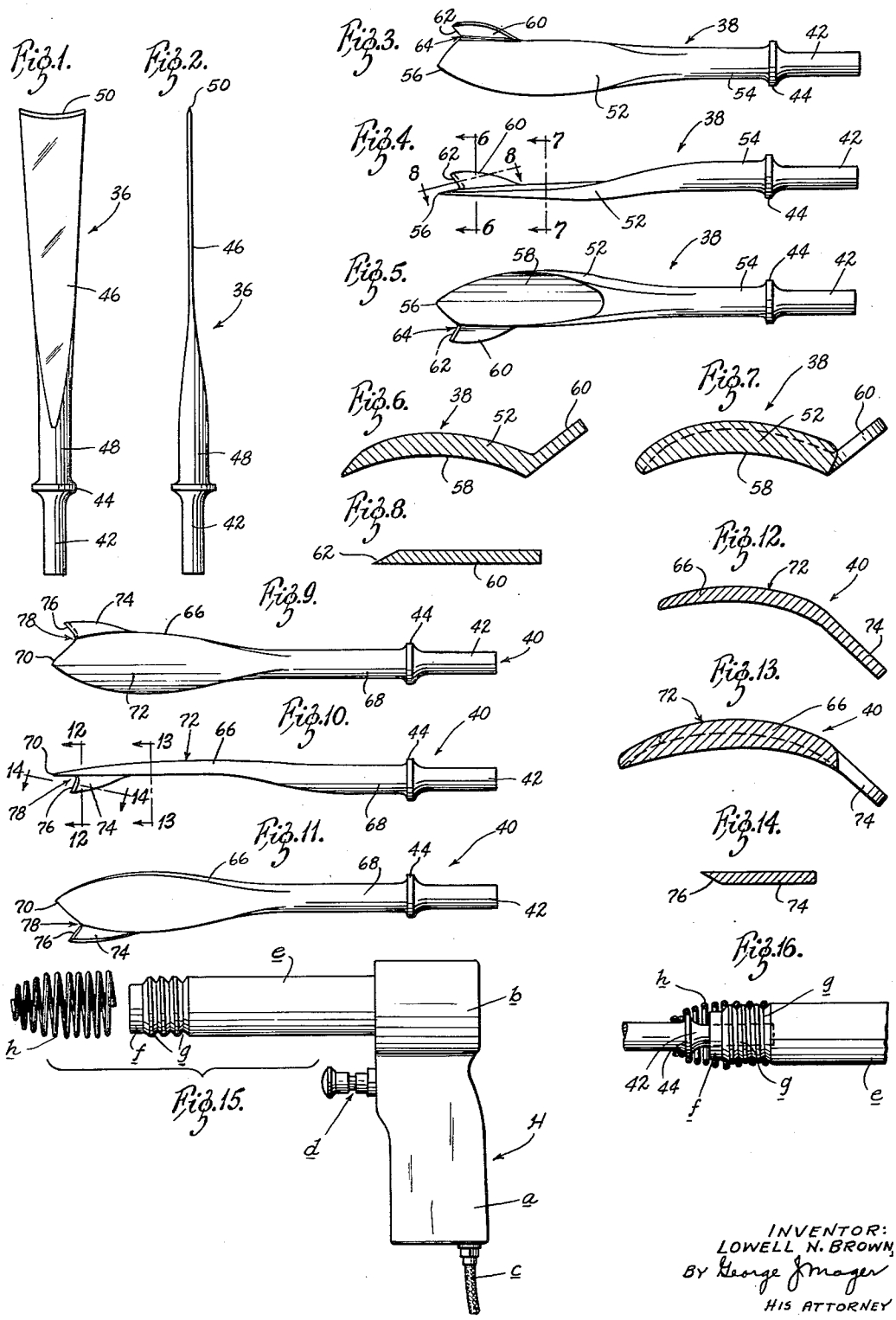

INVENTOR:
LOWELL N. BROWN,
BY George J. Mager
HIS ATTORNEY

METHOD AND TOOLS FOR REPAIRING MUFFLER ASSEMBLIES

Filed Oct. 5, 1959 3 Sheets-Sheet 2

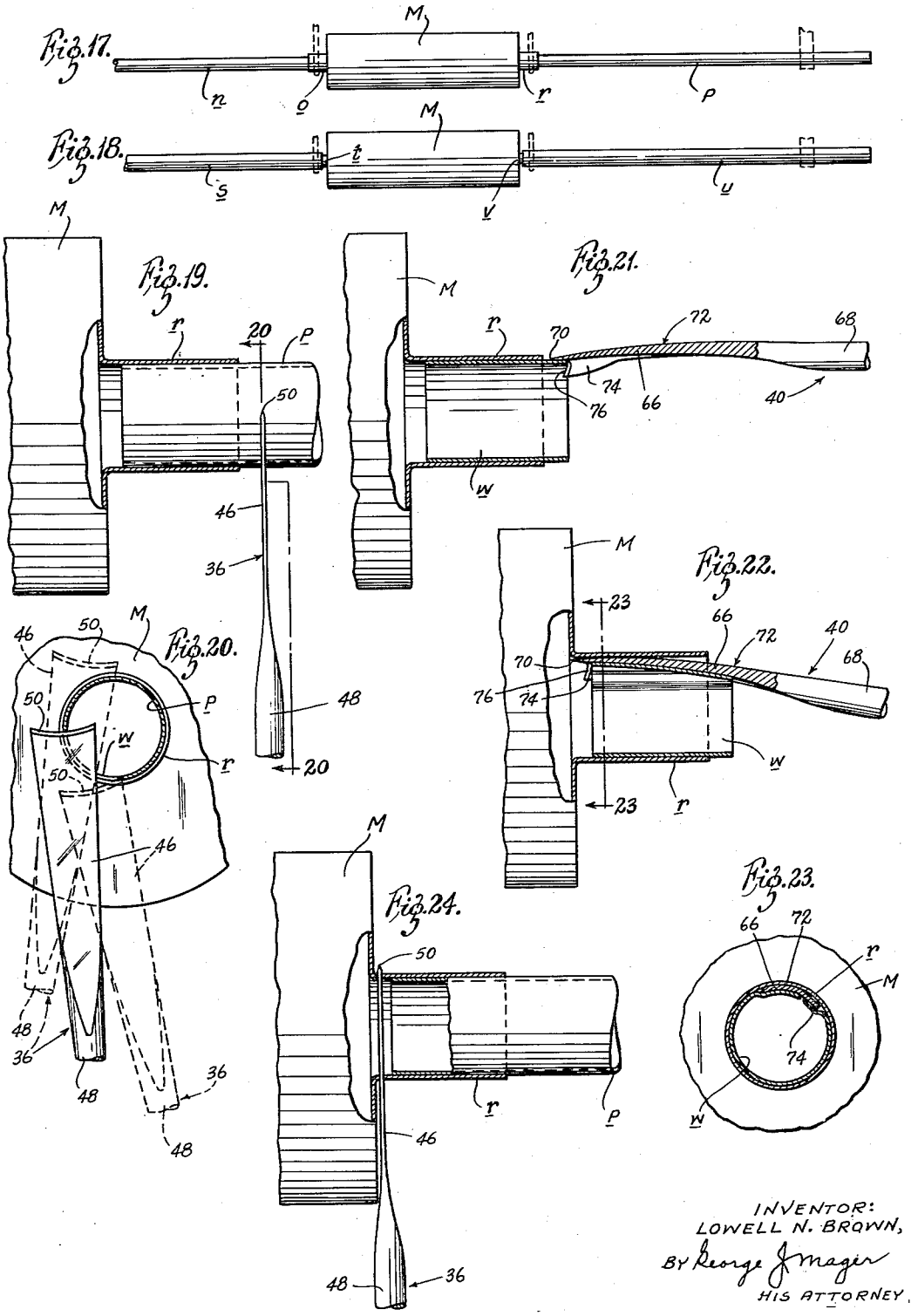

INVENTOR:
LOWELL N. BROWN,
BY George J. Mager
HIS ATTORNEY.

METHOD AND TOOLS FOR REPAIRING MUFFLER ASSEMBLIES

Filed Oct. 5, 1959 3 Sheets-Sheet 3

Fig. 25.

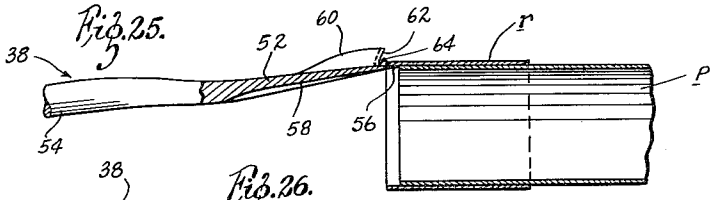

Fig. 26.

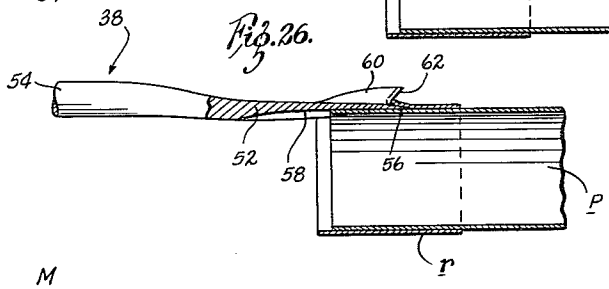

Fig. 27.

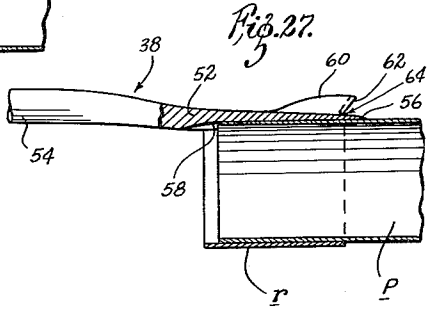

Fig. 28.

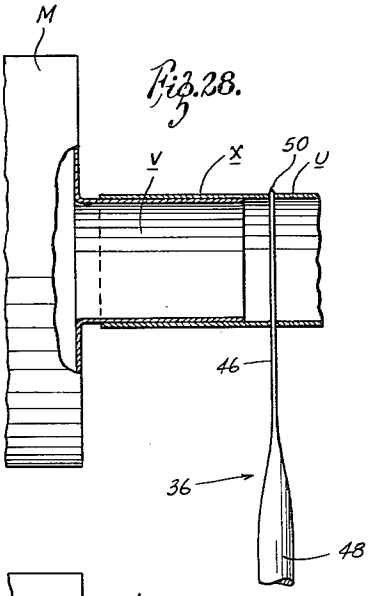

Fig. 29.

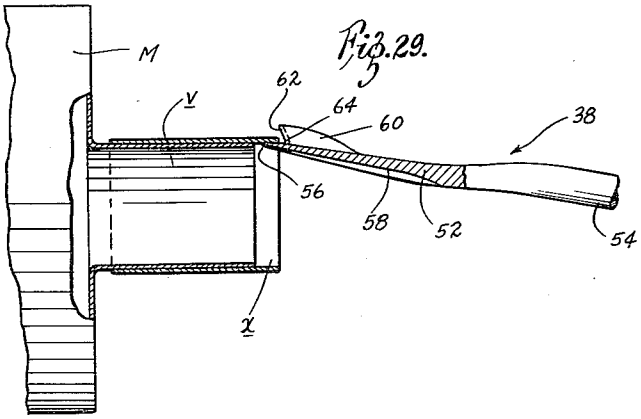

Fig. 30.

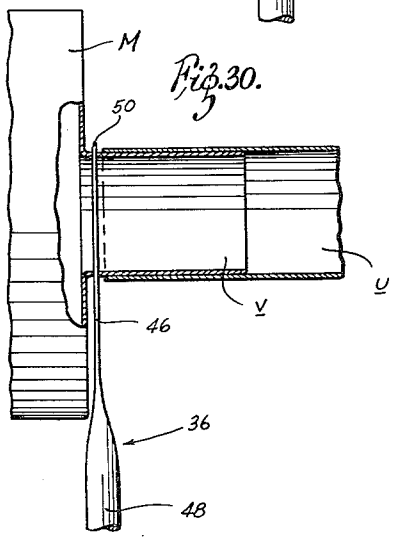

Fig. 31.

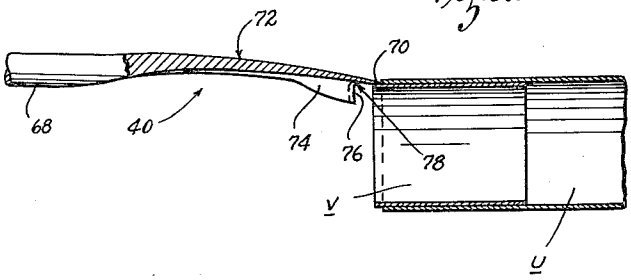

INVENTOR:
LOWELL N. BROWN,
BY George J. Mager
HIS ATTORNEY

United States Patent Office

3,043,002

Patented July 10, 1962

1

3,043,002
METHOD AND TOOLS FOR REPAIRING MUFFLER ASSEMBLIES

Lowell N. Brown, Overland, Mo.
(9422 Trenton Ave., St. Louis 14, Mo.)

Filed Oct. 5, 1959, Ser. No. 844,376
6 Claims. (Cl. 29—401)

The present invention relates generally to a method and means for repairing muffler assemblies of automotive vehicles.

More particularly, the present invention relates to a novel method and a set of tools adapted to facilitate and expedite the heretofore manually performed operations required in the repair of muffler assemblies.

A muffler assembly as contemplated herein includes a muffler proper, an exhaust pipe leading from the vehicle engine to the inlet end of the muffler, and a tail pipe leading from the outlet end of said muffler to atmosphere.

Commonly, such assemblies are suspended immediately below the vehicle chassis by means of appropriate muffler clamps and pipe hangers or brackets. Customarily as is well known, these assemblies are repaired from below, with the vehicle usually disposed on a hydraulic lift or over a pit. Working overhead with chisel and hammer, mechanism encounter great difficulty particularly when the muffler installation is so to speak in a "crowded" location. In other words, not only must they find space for the chisel, but also for the hand that holds the chisel. Furthermore, not only must they find space for the hammer itself, but also additional space wherein to swing the hammer in attempting to direct effective blows against the chisel. Obviously, under conditions such as these, injuries to one or both hands of a mechanic frequently result. Seldom also, is it possible to remove one component of the assembly without at least to some extent damaging the component thereto adjacent. Usually, when chisel and hammer operations prove ineffective, an acetylene torch will be employed to sever the components.

In addition to the hazards involved, the repair of muffler assemblies in accordance with current practises comprise tedious and time-consuming undertakings, so that although it would seem that such operations are comparatively simple, the time required to perform them heretofore has been excessive.

Accordingly, the primary object of the present invention is to provide a method and means for overcoming the disadvantages referred to above.

To this end, the invention first of all teaches the employment of a set of novel tools that are mechanically operable, and that are contoured in accordance with the concepts thereof. Three cutting tools are provided, and each of them includes means whereby it may be operatively connected to a conventional pneumatic hammer as will appear. When so connected, each of the tools may be directed toward portions of the muffler assembly by the mechanic holding the pneumatic hammer in one hand, so that as should be understood, the personal injury factor will thus be eliminated. Furthermore, the rapidity with which the pneumatic hammer would deliver its blows as compared with manually delivered blows beggars description, so that as should be manifest, the time factor involved will be greatly reduced.

Another object of the invention is to incorporate means in said tools whereby repairs may be effected by removal of a defective component without more than negligible damage to an adjacent component that is to be salvaged.

A further object of this invention is to teach a method whereby muffler assembly repairs may be quickly made without the use of a torch or any other means except the tools contoured in accordance with the concepts thereof.

The invention is illustrated on three sheets of drawings

2

the accompany this specification, and a more comprehensive understanding of its features and advantages may be had from the detailed description that follows with reference to said drawings, wherein:

FIGURE 1 is a plan view of the cutoff chisel included in the set of tools provided by the present invention;

FIGURE 2 is a side elevational view of said chisel;

FIGURE 3 is a top plan view of the external cutter included in the set of tools provided by the present invention;

FIGURE 4 is a side elevational view of said cutter;

FIGURE 5 is a bottom plan view thereof;

FIGURE 6 is a transverse section, on an enlarged scale, taken on the line 6—6 of FIGURE 4;

FIGURE 7 is a transverse section, on an enlarged scale, taken on the line 7—7 of FIGURE 4;

FIGURE 8 is a fragmentary sectional view, on an enlarged scale, taken on the line 8—8 of FIGURE 4;

FIGURE 9 is a top plan view of the internal cutter included in the set of tools provided by the present invention;

FIGURE 10 is a side elevational view of said cutter;

FIGURE 11 is a bottom plan view thereof;

FIGURE 12 is a transverse sectional on an enlarged scale, taken on the line 12—12 of FIGURE 10;

FIGURE 13 is a transverse section, on an enlarged scale, taken on the line 13—13 of FIGURE 10;

FIGURE 14 is a fragmentary sectional view, on an enlarged scale, taken on the line 14—14 of FIGURE 10;

FIGURE 15 is an exploded side elevational view of a typical pneumatic hammer, and a complemental holder spring of beehive contour, wherewith the tools of the present invention would be operatively connected to the hammer;

FIGURE 16 is a side elevational view illustrating a fragmentary portion of the barrel member of the hammer, with the shank of one of the tools of the present invention operatively connected to the free end of said barrel by means of the beehive spring appearing in FIGURE 15, and said spring being shown in section;

FIGURE 17 is a somewhat diagrammatic side elevational view of an exemplary standard automobile muffler assembly including a muffler proper, an exhaust pipe leading from the engine to the intake end of the muffler, and a tail pipe leading from the outlet end of said muffler to atmosphere, the muffler clamps and the tailpipe hanger bracket serving to suspend the assembly from the chassis being suggested in broken lines;

FIGURE 18 is a somewhat diagrammatic side elevational of another exemplary standard automobile muffler assembly including a muffler proper, an exhaust pipe leading from the engine to the intake end of the muffler, and a tail pipe leading from the outlet end of said muffler to atmosphere, the muffler clamps and the assembly from the chassis being suggested in broken lines;

FIGURE 19 is an enlarged reproduction, partly in section, of the outlet end portion of the muffler shown in FIGURE 17 and a fragmentary portion of the tail pipe leading therefrom, with the cutoff chisel of FIGURES 1 and 2 being illustrated applied to said tail pipe;

FIGURE 20 is a sectional view taken on the line 20—20 of FIGURE 19;

FIGURE 21 is a view generally similar to FIGURE 19 illustrating the initial step of applying the FIGURES 9 through 11 internal cutter tool to that segment of the tailpipe severed therefrom by the cutoff chisel;

FIGURE 22 is a view similar to FIGURE 21 illustrating the completion of the internal cutting tool operation;

FIGURE 23 is a sectional view taken on the line 23—23 of FIGURE 22;

FIGURE 24 is an enlarged reproduction, partly in sec-

tion, of the outlet end portion of the muffler shown in FIGURE 18 and a fragmentary portion of the tailpipe leading therefrom, with the cutoff chisel of FIGURES 1 and 2 being illustrated applied to the tubular extension of said muffler;

FIGURE 25 is a sectional view illustrating the initial step in the severance of the muffler extension from the adjacent end portion of the tailpipe that extends thereinto by means of the external cutter shown in FIGURES 3 through 5;

FIGURE 26 is a view similar to FIGURE 25 illustrating a more advanced step in the severance of said muffler extension from said adjacent end portion of the tailpipe;

FIGURE 27 illustrates the completion of the operation referred to in the description of FIGURES 25 and 26;

FIGURE 28 is a view similar to FIGURE 24 with the cutoff chisel shown applied to the tailpipe;

FIGURE 29 is a view similar to FIGURE 28, illustrating the initial step in the removal of the tailpipe segment from the tubular muffler extension by means of the external cutter tool;

FIGURE 30 is a view similar to FIGURE 28 with the cutoff chisel shown applied to the tubular extension of the muffler; and

FIGURE 31 is a view illustrating the initial step in removing the extension segment from the tailpipe by means of the internal cutter tool.

With attention directed particularly to FIGURES 1 through 16, the invention attains its objectives by means of a cutoff chisel generally designated **36**, an external cutter generally designated **38**, and an internal cutter generally designated **40**.

As hereinbefore noted, each of these tools is designed to be power driven by means of a pneumatically operable hammer of the gun type. An exemplary hammer for the purpose is shown in FIGURE 15 and designated H. It includes: a handle *a* repending from a cylindrical section *b*; a flexible line *c* leading to the hammer from a source of compressed air; a manually operable air pressure control device *d*; and a barrel *e* projecting from the cylindrical section *b*.

An appropriate mechanism for automatically reciprocating a piston responsive to manipulations of the control device *d* is located partially in the barrel *e* and partially in the cylindrical section *b*. However, it is not deemed necessary to illustrate and describe this piston reciprocating mechanism, nor the air passageways associated therewith. Reference may be had if desired, to United States Letters Patent No. 2,655,901 issued to me on October 20, 1953, for a comprehensive disclosure of means for effecting reciprocal piston movements in the illustrated pneumatic hammer.

It will be understood of course that the pneumatic hammer H and its operating mechanisms form per se no part of the present invention, and that no claim is made herein to this particular hammer. In other words, whereas the invention contemplates a method requiring power-operated tools, other conventional pneumatic hammers may be employed to attain the objectives thereof, if desired.

Formed externally in the free end portion *f* of the barrel *e* are a number of annular grooves *g* that serve, with the aid of a suitable holder spring, to operatively connect the shank of a selected tool of the present invention to said barrel in position to receive hammer blows directed thereagainst by the reciprocating piston. An exemplary holder spring of the beehive type appears in FIGURE 15 and is designated *h*. By means of such spring or one of a similar nature, the cutoff chisel **36**, the external cutter **38**, and the internal cutter **40** may each be operatively connected to the pneumatic hammer, as is well understood and is demonstrated in FIGURE 16.

In said view, numeral **42** designates the captive shank of any one of the tools **36**, **38**, or **40** of the present invention. In other words, the shanks of the three tools included in the present invention are identical, each is designated by

the same reference character, that being the numeral **42**, and each shank merges into an annular flange portion designated **44** that is adapted to be encompassed by the smaller coils of the holder spring *h*, with the larger coils of said spring in engagement with the grooves *g* of the barrel end *f*.

With attention now focused on FIGURES 1 and 2, it will be seen that the cutoff chisel **36** includes, in addition to a shank **42** and an annular flange portion **44**, a blade **46**. The blade **46** is relatively thin as shown, and merges at one end into the cylindrical body portion **48** of the chisel, and said body portion in turn merges into the annular flange **44**. The blade **46** flares outwardly on both sides thereof from the longitudinal centerline of the chisel **36**, and terminates at its free end in an arcuate sharp cutting edge **50**. As will be apparent, the arcuate configuration of the cutting edge **50** prevents slipping of the chisel **36** in operation.

With attention now focused on FIGURES 3 through 8, it will be seen that the external cutter **38** includes, in addition to a shank **42** and annular flange **44**, a blade **52**. The blade **52** is of the configuration shown, and merges at one end into a cylindrical body portion **54** that in turn merges into the annular flange **44**. The leading end of the blade terminates in a generally V-shaped guide edge **56** that is comparatively thin, but not sharp enough to constitute a cutting edge. What will be considered the lower surface of the blade **52** is arcuately formed transversely thereof as indicated at **58**. The leading end of the blade **52** has integrally formed therewith an angularly upwardly projecting fin segment **60**. The fin segment **60** has a sharp cutting edge **62** that merges into the guide edge **56** as indicated at **64**. As shown particularly in FIGURE 8, the cutting edge **62** is preferably so formed that its apex lies along the inner surface of the fin segment **60** for a reason to appear.

With attention now focused on FIGURES 9 through 14, it will be seen that the internal cutter tool **40** includes, in addition to a shank **42** and flange **44**, a blade **66**. The blade **66** is of the configuration shown, and merges at one end into a cylindrical body portion **68** that in turn merges into the annular flange **44**. The leading end of the blade **66** terminates in a generally V-shaped guide edge **70** that is comparatively thin, but not sharp enough to constitute a cutting edge. What will be considered the upper surface of the blade is arcuately formed transversely thereof as indicated at **72**. The leading end of the blade **66** has integrally formed therewith an angularly downwardly projecting fin segment **74**. The fin segment **74** has a sharp cutting edge **76** that merges into the guide edge **70** as indicated at **78**. As shown particularly in FIGURE 14, the cutting edge **76** is so formed that its apex lies along the outer surface of the fin segment **74**, for a reason to appear.

It will be remembered that all three tools illustrated and described are operable by the pneumatic hammer H, so that as will be explained in more detail hereafter, all cutting operations that would be necessary to repair muffler assemblies may be made by connecting the appropriate one of said tools to said hammer via the holder spring *h*. It will also be understood that when any one of the tools **36**, **38**, or **40** has been connected to the hammer as illustrated in FIGURE 16, the mechanic may point such tool in any direction, and can manipulate the hammer to bring the blade thereof into normally "difficult-to-reach" regions.

As hereinbefore observed, there are two types of muffler assemblies in general use, and these are illustrated somewhat diagrammatically in FIGURES 17 and 18, where the muffler proper is designated M.

In the FIGURE 17 assembly, the muffler M is provided on each end with a hollow boss or tubular extension wherein the adjacent end portions respectively of the associated exhaust pipe and tail pipe terminate. Thus, one end of the exhaust pipe *n* leading from the engine

terminates within the inlet tubular extension *o*, and one end of the tail pipe *p* terminates in the outlet tubular extension *r*.

In the FIGURE 18 assembly, the muffler M is provided on each end with a hollow boss or tubular extension whereon the adjacent end portions of the associated exhaust pipe and tail pipe are mounted and terminate. Thus, one end portion of the exhaust pipe *s* leading from the engine is mounted on and terminates on the inlet extension *t*, and one end portion of the tail pipe *u* is mounted on and terminates on the outlet extension *v*.

In explaining the methods of operation, it will first be assumed that the tailpipe *p* of the FIGURE 17 assembly had become defective for any of various reasons, and that it were desirable to replace it while at the same time salvaging the muffler M. With the cutoff chisel **36** connected to the hammer H, the mechanic would first sever the left hand half section of the pipe *p* (as viewed in FIGURE 20) by directing the arcuate cutting edge **50** thereto from below, manipulating the control device *d*, and advancing the chisel upwardly in a generally perpendicular direction as should be understood from an inspection of said figure. Thereupon, this operation would be repeated on the right hand half section of the pipe, thus completing severance of the segment *w* (appearing also in FIGURE 21) from the balance of the tail pipe *p* which would now be discarded. Next, the mechanic would connect the internal cutter **40** to the hammer, and direct the guide edge **70** of said cutter as illustrated in FIGURE 21. Thereupon, while manipulating the control device *d*, he would advance the cutter **40** leftwardly from the FIGURE 21 to the FIGURE 22 position thereof, thus splitting the segment *w* longitudinally as the disposition of the sharp cutting edge **76** deflects the sheared metal inwardly on one side of the cut. With the segment *w* thus slit longitudinally from end to end and its circular wall thus deformed as suggested in FIGURE 23, withdrawal of the cutter **40** and removal of the segment *w* from the extension *r* comprise easy and simple operations.

It is noted that the guide edge **70** serves to slightly separate the contacting surfaces between the extension *r* and the pipe segment *w*, thus facilitating the work of the cutting edge **76**. At the same time however, the arcuate upper surface **72** of the blade **66** prevents distortion of the extension *r*, so that following removal of the treated segment *w*, a new tail pipe may be quickly installed.

Obviously, should the exhaust pipe *n* of the FIGURE 17 assembly have become defective for any reason, and it were desirable to replace it while at the same time salvaging the muffler M and tail pipe *p*, the described steps would be taken at the inlet end of said muffler at the extension *o*.

It will now be assumed that the muffler M of the FIGURE 17 assembly had become defective, and that it were desirable to replace it while at the same time salvaging the exhaust pipe *n* and the tail pipe *p*. To this end, the extensions *o* and *r* would be severed from the muffler body by means of the cutoff chisel **36**. This operation is demonstrated in FIGURE 24 with respect to the extension *r*, it being understood that the extension *o* would be treated in like fashion. In severing the said extensions from the muffler M, the cutoff chisel **36** would be manipulated in the same manner as heretofore described and illustrated in FIGURE 20 with respect to the tail pipe *p*.

Following severance of the extensions *o* and *r*, the muffler M would be removed and discarded. Next the inlet and outlet muffler supporting clamps suggested in broken lines would be removed. Thereupon the external cutting tool **38**, properly connected to the pneumatic hammer H (as should now be understood), would first be pointed as illustrated in FIGURE 25, with the guide edge **56** thereof directed toward the contacting surfaces of the tail pipe *p*, and the severed muffler extension *r*. Thereupon, while manipulating the control device *d* of the hammer H, the mechanic would advance the cutter **38** rightwardly (as viewed in the drawings) from the FIGURE 25 position to the FIGURE 27 position thereof, thus splitting the severed extension *r* longitudinally as the disposition of the sharp cutting edge **62** deflects the sheared metal outwardly on one side of the cut. With the severed extension *r* thus slit longitudinally from end to end, and its circular wall thus spread apart, withdrawal of the cutter **38** and removal of said extension comprise easy operations.

It should be apparent that the guide edge **56** serves to slightly separate the contacting surfaces of the extension *r* and the end of the tail pipe mounted thereon, thus facilitating the work of the cutting edge **62** as the cutter **38** is advanced. At the same time however, the arcuate lower surface **58** of the blade **52** prevents distortion of the tail pipe end, so that following removal of said extension *r* (and removal of the extension *o* from the end of the exhaust pipe *s* in similar fashion as should be understood), a new muffler could be quickly installed and the earlier removed muffler supporting clamps aforesaid would again be placed in position.

With respect to a muffler assembly such as that appearing in FIGURE 18, it will first be assumed that the tail pipe *u* thereof had become defective and should be replaced, while at the same time it were desirable to salvage the muffler M and the exhaust pipe *s*.

The method whereby such an operation would be accomplished in accordance with the teachings of the present invention is demonstrated in FIGURES 28 and 29. It is believed that in contemplation of the explanation hereinbefore presented, it should be manifest how the segment *x* after being severed from the tail pipe *u* by means of the cutoff chisel **36**, may be quickly removed from the extension *v* following employment of the cutter **38**.

In other words as a comparison of FIGURES 25 and 29 will demonstrate, the directional advances of the cutter **38** though opposite, would attain a similar result. It will further be apparent that subsequent to the operation demonstrated in FIGURE 28, and consequently prior to the operation demonstrated in FIGURE 28, and consequently prior to the operation demonstrated in FIGURE 29, the outlet end muffler clamp will have been removed.

Assuming now with respect to the FIGURE 18 assembly that the muffler M thereof had become defective and should be replaced by a new counterpart, the method whereby this may be accomplished is portrayed in FIGURES 30 and 31 as pertaining to the outlet end of said muffler, it being deemed obvious that corresponding treatment would be accorded the inlet end thereof.

In contemplation of the foregoing description and operational explanation augmented by the comprehensive illustrations presented in the drawings, it is believed that an adequate understanding of the present invention should be had without further elaboration thereon. In practise it has been found that by means of the present invention, the time heretofore required in manual chisel and hammer operations for repairing muffler assemblies has been greatly reduced. Furthermore, by means of the present invention, a novel method has been provided that reduces personal injuries to a minimum.

Although primarily designed for use in repairing muffler assemblies without removing them from the vehicle chassis, it should of course be manifest that a removed muffler assembly would still further reduce the time required to effect any of the operations described.

What I claim is:

1. The method of removing a defective tail pipe from the muffler proper of an automative vehicle muffler assembly of the type wherein one end portion of the tail pipe terminates within the outlet tubular extension of the muffler, said method comprising: the steps of first operatively connecting a cutoff chisel having a thin blade provided with an arcuate cutting edge to the barrel of a pneumatic hammer of the character disclosed; thereupon

severing said tail pipe along an imaginary line removed a short distance from said extension by means of said chisel; thereafter removing said chisel from the hammer, and then operatively connecting an internal cutter having a blade with an arcuate upper surface to the barrel of the same pneumatic hammer, said blade terminating at its free end in a generally V-shaped guide edge, and being provided with an integral angularly downwardly projecting fin segment having a sharp cutting edge that merges into the guide edge aforesaid; thereupon slitting the segment of tail pipe remaining in said extension longitudinally from end to end thereof by means of said internal cutter; thereupon withdrawing the cutter; and then removing said longitudinally slit segment from the tubular extension aforesaid.

2. The method of removing a defective exhaust pipe from the muffler proper of an automotive vehicle muffler assembly of the type wherein one end portion of the exhaust pipe terminates within the inlet tubular extension of the muffler, said method comprising: the steps of first operatively connecting a cutoff chisel having a thin blade provided with an arcuate cutting edge to the barrel of a pneumatic hammer of the character disclosed; thereupon severing said exhaust pipe along an imaginary line removed a short distance from said extension by means of said chisel; thereafter removing said chisel from the hammer, and then operatively connecting an internal cutter having a blade with an arcuate upper surface to the barrel of the same pneumatic hammer, said blade terminating at its free end in a generally V-shaped guide edge, and being provided with an integral angularly downwardly projecting fin segment having a sharp cutting edge that merges into the guide edge aforesaid; thereupon slitting the segment of tail pipe remaining in said extension longitudinally from end to end thereof by means of said internal cutter; thereupon withdrawing the cutter; and then removing said longitudinally slit segment from the tubular extension aforesaid.

3. The method of removing a defective muffler proper from an automotive vehicle muffler assembly of the type wherein one end portion of the exhaust pipe terminates within the inlet tubular extension, and one end portion of the tail pipe terminates within the outlet tubular extension of the muffler aforesaid, said method comprising: the steps of first operatively connecting a cutoff chisel having a thin blade provided with an arcuate cutting edge to the barrel of a pneumatic hammer of the character disclosed; thereupon severing each of said extensions along an imaginary line removed a short distance from the adjacent ends of said pipes by means of said chisel; thereafter removing said chisel from the hammer and then operatively connecting an external cutter having a blade with an arcuate lower surface to the barrel of the same pneumatic hammer, said blade terminating at its free end in a generally V-shaped guide edge, and being provided with an integral upwardly projecting fin segment having a sharp cutting edge that merges into the guide edge aforesaid; thereupon with the muffler removed, slitting the segment of the inlet tubular extension remaining on the adjacent end of the exhaust pipe and the segment of the outlet extension remaining on the adjacent end of the tail pipe longitudinally from end to end by means of said cutter; and thereupon removing the split extension segments respectively from the adjacent end of the exhaust pipe and the adjacent end of the tail pipe.

4. The method of removing a defective tail pipe from the muffler proper of an automotive vehicle muffler assembly of the type wherein one end portion of the tail pipe terminates and is mounted on the outlet tubular extension of the muffler, said method comprising: the steps of first operatively connecting a cutoff chisel having a thin blade provided with an arcuate cutting edge to the barrel of a pneumatic hammer of the character disclosed; thereupon severing said tail pipe along an imaginary line removed a short distance from said extension by means of said chisel; thereafter removing said chisel from the hammer and then operatively connecting an external cutter having a blade with an arcuate lower surface to the barrel of the same pneumatic hammer, said blade terminating at its free end in a generally V-shaped guide edge, and being provided with an integral angularly upwardly projecting fin segment having a sharp cutting edge that merges into the guide edge aforesaid; thereupon slitting the segment of tail pipe remaining on said extension longitudinally from end to end thereof by means of said cutter; and thereupon removing said longitudinally slit segment from the tubular extension aforesaid.

5. The method of removing a defective exhaust pipe from the muffler proper of an automotive vehicle muffler assembly of the type wherein one end portion of the exhaust pipe terminates and is mounted on the inlet tubular extension of the muffler, said method comprising: the steps of first operatively connecting a cutoff chisel having a thin blade provided with an arcuate cutting edge to the barrel of a pneumatic hammer of the character disclosed; thereupon severing said exhaust pipe along an imaginary line removed a short distance from said extension by means of said chisel; thereafter removing said chisel from the hammer and then operatively connecting an external cutter having a blade with an arcuate lower surface to the barrel of the same pneumatic hammer, said blade terminating at its free end in a generally V-shaped guide edge, and being provided with an integral angularly upwardly projecting fin segment having a sharp cutting edge that merges into the guide edge aforesaid; thereupon slitting the segment of exhaust pipe remaining on said extension longitudinally from end to end thereof by means of said cutter; and thereupon removing said longitudinally slit segment from the tubular extension aforesaid.

6. The method of removing a defective muffler proper from an automotive vehicle muffler assembly of the type wherein one end portion of the exhaust pipe terminates and is mounted on the inlet tubular extension, and one end portion of the tail pipe terminates and is mounted on the outlet tubular extension of the muffler aforesaid, said method comprising: the steps of first operatively connecting a cutoff chisel having a thin blade provided with an arcuate cutting edge to the barrel of a pneumatic hammer of the character disclosed; thereupon severing each of said extensions along an imaginary line removed a short distance from the adjacent ends of said pipes by means of said chisel; thereafter removing said chisel from the hammer and then operatively connecting an internal cutter having a blade with an arcuate upper surface to the barrel of the same pneumatic hammer, said blade terminating at its free end in a generally V-shaped guide edge, and being provided with an integral cutting edge that merges into the guide edge aforesaid; thereupon with the muffler removed slitting the segment of the outlet tubular extension remaining within the adjacent end portion of the tail pipe longitudinally from end to end thereof and slitting the segment of the inlet tubular extension remaining within the adjacent end portion of the exhaust pipe longitudinally from end to end thereof by means of said cutter; and thereafter removing said longitudinally slit extension segments respectively from said adjacent end portion of the tail pipe and the exhaust pipe.

References Cited in the file of this patent

UNITED STATES PATENTS

1,276,458	Wagner	Aug. 20, 1918
1,598,458	Sullivan	Aug. 31, 1926
1,719,449	Rauko	July 2, 1929
2,002,383	Witt	May 21, 1935
2,172,984	Moray	Sept. 12, 1939
2,176,626	Gentry	Oct. 17, 1939
2,203,158	Klein	June 4, 1940
2,349,889	Steudel	May 30, 1944
2,411,246	Clapper	Nov. 19, 1946
2,874,457	Bennett	Feb. 24, 1959