Aug. 18, 1936. J. A. ZUBLIN 2,051,358

ALLOY

Filed Aug. 6, 1934

Fig. 1.

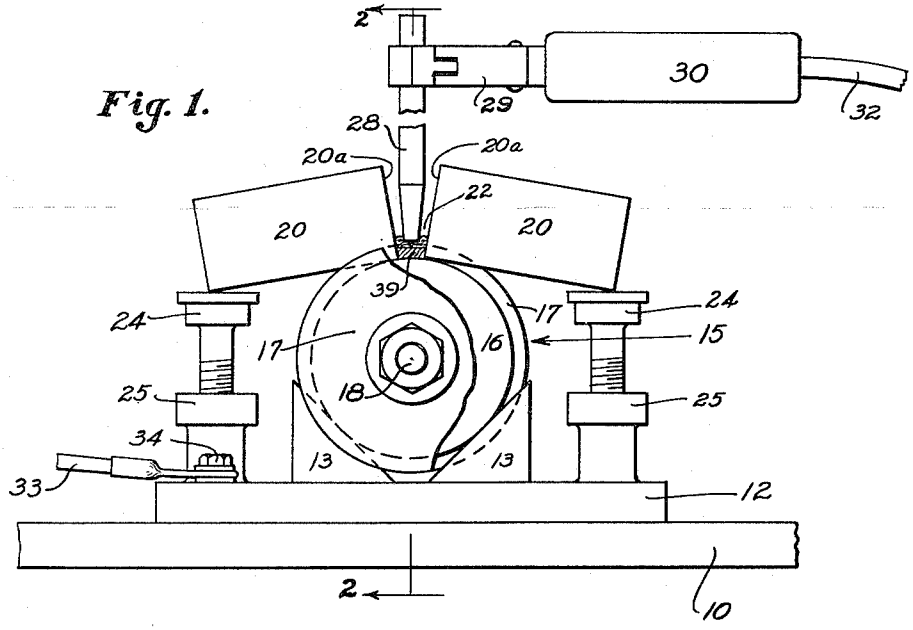

Fig. 2.

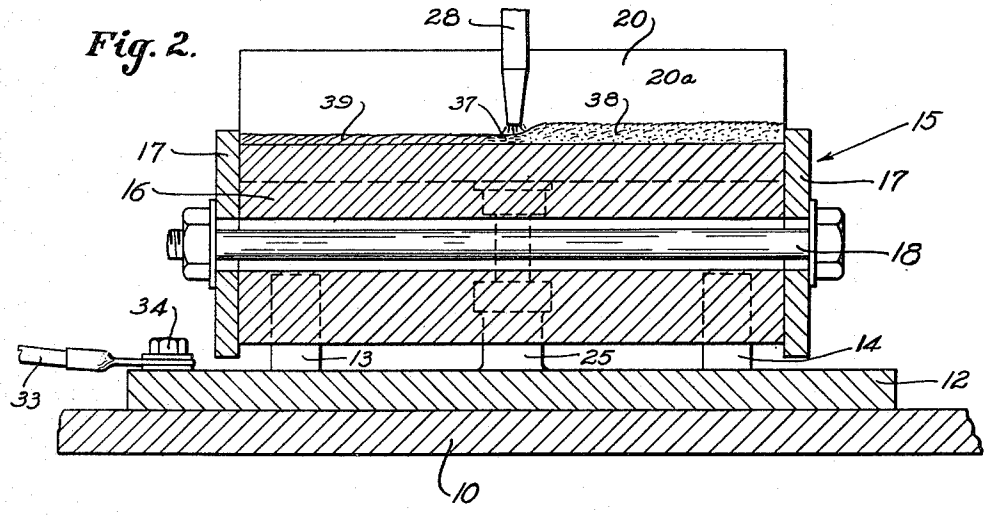

JOHN A. ZUBLIN
INVENTOR

BY Ford H. Harris

ATTORNEY

Patented Aug. 18, 1936

2,051,358

UNITED STATES PATENT OFFICE

2,051,358

ALLOY

John A. Zublin, Bel Air, Calif.

Application August 6, 1934, Serial No. 738,683

11 Claims. (Cl. 75—125)

The present invention has to do generally with ferrous alloys containing copper, and particularly with those containing copper in excess of the amount soluble in the ferrous base so that some copper appears as free particles finely dispersed throughout the mass.

I have found that the presence of copper in iron and iron alloys imparts desirable physical properties to the final alloy. But the production of iron-copper alloys is rendered difficult by the relatively low solubility of either metal in the other and the unusual fact that the two metals when slightly above the melting point are immiscible and so do not readily mix, but, to the contrary, separate. Consequently, it has been a problem to form a product having a sufficiently high percentage of copper to impart the desired properties, since by methods formerly available the copper not dissolved forms large segregations resulting in a non-uniform product, whereas copper in finely dispersed form is desired.

Although copper may be added to iron alone, or to various other combinations of iron and other elements, the particular alloy which I shall explain as typical of my invention is a hard, wear-resistant alloy initially made as a welding rod and deposited on the surface to be faced. Alloys of exceptional hardness find various industrial uses, chiefly and typically as bearing surfaces in journals and the like where no lubrication is used and resistance to wear and abrasion are primary considerations. Metals of this type are usually applied by welding to a steel body which is relatively softer and tougher and so machineable. The alloy is applied as an external layer or facing, and, as it is too hard to machine, is brought to finished dimension by grinding.

Hard facing metals are apt to be very brittle and of low tensile strength so that considerable difficulty is encountered in their tendency to crack and spall during application and finishing and to break down under heavy usage. Increasing the toughness of the metal to remedy these difficulties usually decreases the hardness and resistance to wear.

It thus becomes a general object of my invention to make a ferrous alloy containing copper in excess of the amount soluble in the ferrous base, and with an undissolved excess of copper occurring in small particles evenly distributed throughout the final product.

Another object is a method of forming an alloy of iron and copper in which the copper is evenly distributed and is prevented from separating from the iron during melting of the constituents, to form large aggregations and consequently a non-uniform product.

It is also an object of the invention to provide a self-hardening, wear-resistant alloy of unusual hardness, but containing sufficient copper to remove excessive brittleness and make the deposited metal relatively tough and durable.

A further object is to provide an alloy in the form of a welding rod containing in excess those constituents partially lost during welding and finishing operations. Thus the final deposit is certain to contain sufficient quantities of the several constituents to produce the desired physical characteristics.

These objects are attained by first forming an intimate mixture of copper with the ferrous base, the mixing being such as to insure an even distribution throughout the mixture of the particles of copper, and the copper being added in quantities in excess of those soluble in the ferrous base. Then the mixture is rapidly melted and rapidly congealed while the copper is still uniformly distributed throughout the metal and before segregation can occur, so that the solid body contains the copper in a state of substantially uniform distribution.

My improved hard metal alloy contains iron hardened with carbon, chromium and molybdenum and toughened by the addition of copper finely dispersed throughout the final product. A small amount of manganese is preferably added, as will be explained, but does not materially affect the characteristics of the final deposit.

How the above and other advantages of my invention are attained will be better understood from the following description and the annexed drawing, in which:

Fig. 1 is an end view of a preferred apparatus for forming welding rod; and

Fig. 2 is a longitudinal vertical section on line 2—2 of Fig. 1.

Figures 1 and 2 illustrate a preferred form of apparatus for fusing constituents to form welding rods. The construction and operation of this device is set forth in greater detail in my companion application, "Method and apparatus for fusing metals", Ser. No. 738,684, filed on even date herewith, and consequently only a brief description will be given here since my companion application may be referred to for further details.

Any suitable supporting means is indicated at 10, upon which rests metal base plate 12 of a mould unit. Resting upon opposed pairs of blocks

13 and 14 is the cylindrical electrode assembly generally indicated at 15. Electrode 15 comprises a central cylindrical member 16 and a pair of disks 17 positioned one at each end of the cylinder 16 and held in place by bolt 18.

A pair of refractory bricks 20 are placed with their inner longitudinal edges upon top of cylinder 16 and their opposed faces 20a spaced a short distance apart to form, in conjunction with cylinder 16, a V-shaped mould or charge-receiving space 22 on top of cylinder 16. The outer edges of the bricks are adjustably supported by posts 24 threaded into standards 25 on base 12. Cylinder 16 is preferably of carbon, but may be of any other electrically conductive material.

Carbon pencil 28 is mounted on clamp 29 on handle 30 so that it may be held by an operator, and provides an electrode that may be moved lengthwise of the charge receiving space 22. The end of electrode 28 is pointed as indicated, in order to concentrate within a relatively small space the arc formed between the two electrodes.

Electric power is supplied from any suitable source by negative lead 32 attached to electrode 28 and positive lead 33 attached to binding post 34 on base plate 22, current passing to electrode 15 through blocks 13 and 14.

After a suitable quantity of charge 38 is placed within mould 22 on top of cylinder 16, an arc is struck at one end of the mould between electrodes 15 and 28. The intense heat of the arc rapidly melts the material at 37 beneath pencil 28, and as rapidly as the material melts in one spot the arc is moved away from the melted portion of the charge to be over unmelted charge so that the entire charge is progressively melted from one end to the other. As the arc moves on to directly heat fresh, unmelted charge, the already molten charge is immediately allowed to cool and forms a solid rod as at 39; and this cooling is very rapid because the mass of bricks 20 and electrode 15 is so large as not to become appreciably heated during exposure to the arc and consequently the heat from the fused charge is rapidly dissipated. In this way, the materials are almost instantaneously fused and are then very quickly chilled to relatively low temperatures.

I describe this mould and method of using as a typical and preferred manner of making a welding rod of my new alloy, but it will be understood that other methods and devices may be used.

In order to form a welding rod made of my improved wear-resistant alloy, the charge introduced into the mould comprises ferromolybdenum, ferrochromium, cast iron, and copper. Ferromanganese is also preferably added, though this latter may be omitted. These constituents are introduced in the proportions shown by the following table in which the first column indicates the range of parts by weight, and the second and third columns illustrate typical preferred proportions:

Table I

	Range	A	B
Ferromolybdenum	9.25–11.25	10.25	9.25
Ferrochromium	10.0 –12.5	12.5	12.5
Cast iron	11.0 –16.0	14.75	16.0
Copper	12.0 –12.5	12.5	12.5
Ferromanganese	.5 – 1.5		1.0
Flux	1.0 – 1.0	1.0	1.0

The ferro-alloys are standard commercial products, the ferromolybdenum used containing about 68% molybdenum and 30% iron, the ferrochromium containing about 70% chromium and 24% iron, and the ferromanganese 80% manganese and 14% iron. The two latter alloys usually contain a substantial per cent of carbon, which is desirable. These figures are, of course, only representative, for various grades of the alloys may be used. The copper is commercially pure; and although iron may be introduced in other forms, cast iron is preferred. It will, of course, be understood that the iron and ferro-alloys contain varying amounts of impurities such as silicon, phosphorus, sulphur, and manganese, but the quantity of all these constituents is very small and not constant. Since in general their effect may be neglected, they are merely considered as impurities, although silicon is shown separately in the analysis below. The amount of manganese so introduced is negligible and it is preferred to introduce this element in the form of a controlled amount of ferromanganese.

Before introduction into the mould of the various substances, I have found it preferable to crush or otherwise comminute the constituents to what may be termed a granular form in order to help obtain an even distribution of the several constituents so that the welding rod will be as uniform as possible in composition. After comminution, the several constituents are measured out in proportions by weight as indicated in Table I, and are then introduced into a device suitable for mixing, for which purpose a ball-mill is preferred because of the intimate and uniform mixing obtainable with this device, resulting in a uniform distribution of all constituents throughout the mixture.

In order to form a welding rod, a suitable amount of the mixed powdered constituents is introduced into mould space 22 which is of a proper size and shape to form a rod suitable for gas or electric welding methods. The charge is then melted by means of an electric arc as described, the localized heat of the arc melting but a small portion of the charge at any instant. In this manner there is obtained an almost instantaneous fusion of the metals, a very short duration of the fluid state, and a very rapid congealing. During even the short period of fluidity, the several constituents, with the exception of the copper, readily form a substantially homogeneous alloy. Liquid iron and copper when elevated somewhat above the melting point are immiscible, so there is a tendency for the copper to segregate in relatively large bodies at or near the surface of the rod. Rapid cooling of the fused materials checks this tendency before segregation of the copper occurs, and the metal freezes while the copper is still uniformly distributed, so that the welding rod produced contains particles of free copper distributed throughout in varying sizes.

It is not essential that every cross sectional area of the finished rod show an absolutely uniform composition, and of course this will not be the case if the section passes through a relatively large body of copper. It is sufficient that each short length of rod be of the same average composition, and the distribution of the constituents is sufficiently uniform if this be the case.

There is some loss of all constituents, except the iron, by vaporization and oxidation. Also some copper appears at the surface so that when the rod is buffed after removal from the mould the copper loss is a little higher in proportion

than the other elements, as may be seen in Table II, below.

The proportions of the several constituents required to produce a rod of a given composition will vary with the percentage compositions of the several ferro-alloys and with the loss of the elements during the melting and finishing processes. Because of this loss, certain of the constituents are present in the original mixture in excess of the quantities desired in the welding rod. Percentage compositions are indicated below in Table II, in which the first column indicates the approximate range in percentage composition of the various elements in the mixture when used in the proportions of the first column of Table I, the second column indicates the preferred range of composition of the welding rod, the third column gives the analysis of a typical welding rod made from a mixture having the proportions of column B, Table I, and the last column, the composition of a typical deposit:

Table II

	Range in mixture	Range in rod	Typical rod B	Typical average deposit
	Percent	*Percent*	*Percent*	*Percent*
Fe	35 -50	48 -53	51.24	60.3
Mo	12 -16	11 -14	12.24	10.7
Cr	13 -20	13 -16	14.18	17.9
Cu	20 -25	15 -25	18.00	5.6
Mn	1.5- 5	0 - 1	.45	None
C	1.8- 3	2.5- 4	3.27	3.6
Si	.5- 1	0 - 1	.58	.5
Impurities	0 - 1	0 - 1	.04	1.4

The rod so produced is a basic mixture to which other metals may be added to change the characteristics of the basic alloy according to the characteristics of the added metal. Thus higher proportions of chromium or carbon harden the alloy but increase brittleness, and a higher proportion of iron makes for a softer, more weldable alloy.

Table I shows the inclusion of one part of flux, which is not taken into consideration in the formation of Table II. The addition of this material helps remove impurities from the rod as it is melted, these impurities forming upon the rod surface a slag which is removed by buffing.

When it is desired to form a bearing surface upon a body, this rod is applied to the body to form an external coating thereon in the same manner as any other rod is applied, which will be understood by those skilled in the art. During the time of application, the deposit remains in a molten condition for a short time, during which the tendency of the copper to separate from the iron brings a large percentage of the copper to the surface of the weld. It is desired that a considerable percentage of the copper remain distributed throughout the finally deposited metal, and it is for this purpose that there is present in the original mixture and in the rod a large amount of copper in excess of that finally remaining in the deposit, because contact with the remainder of the metal of this large percentage of copper insures final retention in the alloy of the desired amount.

The surface of a rough deposit is covered with a more or less continuous film of copper. If, in a typical application, the rough deposit is a quarter of an inch thick, about 20 to 40% of the thickness of this application will be ground away to bring the bearing surface to finished dimensions, and the portion of the weld so removed carries with it most of the copper content of the applied metal.

The remaining metal presents a hard polished surface in which may be seen irregular bodies of free copper. A very few of the largest copper aggregations may be as much as a quarter of an inch in diameter, but are of the order of only a few hundredths of an inch thick. Examination of the macrostructure discloses a large number of much smaller copper bodies ranging in size to those barely visible. Microscopic examination of such a polished specimen at increasing powers of magnification, discloses increasingly large numbers of copper particles of decreasing size; and this characteristic distribution of very minute free copper particles has been observed at several selected magnifications ranging up to 5000 diameters. Such an examination proves that the remaining bearing metal contains copper uniformly dispersed throughout but in very finely divided form. This characteristic dispersion is found also in the rod producing the deposit.

As the molten metal cools it appears there is a temperature zone in which the iron and copper are miscible so that some copper goes into solution, for the microscopic examination discloses around each of the small bodies of free copper an irregular but easily seen zone which appears to have a high percentage of copper in solution.

It will be noted in general that, while the copper content of either the rod or the final deposit is somewhat less than the content of the original mixture and the final range of particle sizes is perhaps greater than in the original mixture, many of the copper particles have been broken up during the melting and welding into much finer particles which are dispersed throughout the deposit so that there is finally retained both in the rod and in the alloy a substantially uniform distribution of copper.

The dispersion of small copper bodies through the bearing metal changes the physical characteristics of the applied metal, even though the copper itself is not all in solution. This is indicated by the fact that the alloy without copper is very hard but quite brittle. The addition of the copper toughens the resulting alloy and removes excessive brittleness to produce a metal that makes a very hard and durable facing substance.

It will be realized that the composition of the final deposit will depend upon the deposit thickness and the method and duration of the application, since during this procedure the applied metal will combine to a greater or less extent with the base metal and some of the constituents will be lost as a result of continued exposure to high temperatures. The composition also varies progressively from the outside to the base metal. By way of example, a deposit was made upon a block of mild steel with a rod containing no manganese and then the outer portion ground away as described to form a substantially uniform surface. Analysis of an average sample of this typical deposit (see Table II, last column) after grinding showed that the metal beneath the surface contained only 5.6% of copper, indicating that the mixture and rod contained copper in excess, roughly to the extent of 5 and 3.5 times, respectively, the copper content of the ground deposit. The usual copper content is between 5% and 10%. The largest loss of copper results from grinding to finish the bearing surface. Addition of iron from the mild steel base increased the iron content to 60.3% as compared with about 50% in the rod, and it is preferable that the welding methods be

such as to result in substantially this percentage.

Since the total percentage of iron and copper is approximately the same as in the mixture and in the rod, percentages of the other constituents do not change materially, although there may be some loss of them during both the formation of the rod and the application of the deposit. The changes in total mass caused by additions and losses of certain individual constituents of course effects a change in the percentage or relative amount present of the other constituents. The carbon increases roughly in proportion of the iron and remains at about 6% of the iron content. The combined percentages of silicon, carbon, and impurities do not normally exceed 6%.

The use of manganese is preferable but not necessary, and is preferred because in small amounts it improves the welding qualities of the alloy both in first deposits and in repair layers, and because it is a deoxidizing agent. Most of the manganese is lost during the two heats and little if any remains in the final deposit. In larger amounts (e. g., 6 parts of ferromanganese) the final alloy is softer and tougher.

The hardness of the applied metal is quite uniform, except when tested upon one of the larger copper bodies, which are softer naturally than the surrounding material. Tests upon many specimens have shown a scleroscope hardness ranging from about 70–85, with the average about 75–80. It has been generally observed that when a repair layer is applied, that is a second layer over a previously applied layer, that the repair layer averages about 5 points higher or approximately 80–85 scleroscope. This increase in hardness is attributed to the fact that there is less dilution of the bearing metal with iron from the base to which the facing is applied, but the increase in hardness is not accompanied by any material increase in brittleness. The deposit retains its hardness over a wide range of temperatures and may be used at relatively high temperatures with no decrease in hardness. Heat treatment after application usually somewhat increases hardness. Initial layers after quenching from 1550° F. and then drawing at 700° to 800° F. show an average hardness of 85–90 scleroscope.

The alloy bonds extremely well with the parent metal to which it is applied, so that no difficulty arises from a weak bond, the bond at times being stronger than the applied metal itself. Further, when a second or repair layer is applied over an old layer of bearing metal, the two layers fuse together very evenly and show no signs of cracking or developing zones of weakness along their junction.

Although I have described my invention in connection with a particular alloy, the broader claims are not to be limited thereby, for the invention is applicable generally to iron alone with copper or with other alloying agents than those mentioned, for the scope of the invention is intended to include any ferrous composition in which there is present undissolved copper in free particles finely dispersed throughout the mass. Of course, changes in other elements may be made by persons skilled in the art without destroying the advantages of the free copper present. The term "alloy" used in the specification and claims is used in a broad sense to include any combination of metallic elements, whether they result in chemical compounds, solid solutions, mechanical mixtures, or any combination of these three conditions.

I claim as my invention:

1. A welding rod, for forming a deposit having wear-resistant properties, having the following composition: molybdenum 11 to 14%, chromium 13 to 16%, copper 15 to 25%, and iron substantially all of the remainder.

2. A welding rod, for forming a deposit having wear-resistant properties, having the following composition: molybdenum 11 to 14%, chromium 13 to 16%, copper 15 to 25%, manganese trace to 1%, and iron substantially all of the remainder.

3. A welding rod, for forming a deposit having wear-resistant properties, having the following composition: molybdenum 11 to 14%, chromium 13 to 16%, copper 15 to 25%, carbon 2.5 to 4%, silicon trace to 1%, and iron substantially all of the remainder.

4. A welding rod, for forming a deposit having wear-resistant properties, having the following composition: molybdenum 11 to 14%, chromium 13 to 16%, copper 15 to 25%, manganese trace to 1%, carbon 2.5 to 4%, silicon trace to 1%, and iron substantially all of the remainder.

5. A welding rod for forming a wear-resistant deposit of approximately the following composition: iron 60%, molybdenum 13%, chromium 15%, copper 6%, manganese .5%, carbon 3%, silicon .5%, and 1% of impurities.

6. A welding rod for producing a wear-resistant deposit of approximately the following composition: iron 55 to 65 parts, chromium and molybdenum together 25 to 35 parts, copper 5 to 10 parts, and about 5 parts of carbon, silicon, and minor elements.

7. A welding rod for producing a wear-resistant deposit of approximately the following composition: iron 55 to 65 parts, chromium and molybdenum together 25 to 35 parts, copper 5 to 10 parts, and about 5 parts of carbon, silicon, and minor elements; the rod containing copper in excess of the content of the final deposit.

8. A welding rod for producing a wear-resistant deposit of approximately the following composition: iron 55 to 65 parts, chromium and molybdenum together 25 to 35 parts, copper 5 to 10 parts, and about 5 parts of carbon, silicon, and minor elements; the copper content of the rod being at least 3 times that of the deposit remaining after grinding to a finished bearing surface.

9. A facing of hard, wear-resisting metal applied by welding to a ferrous base which after application and finishing has approximately the following composition: iron 60%, molybdenum 13%, chromium 15%, copper 6%, carbon 3.5%, silicon .5% and the balance impurities.

10. A ferrous alloy containing: molybdenum 10 to 14%, chromium 13 to 18%, copper 5 to 25%, and iron substantially all of the remainder.

11. A ferrous alloy containing: molybdenum 10 to 14%, chromium 13 to 18%, copper 5 to 25%, carbon 2.5 to 4%, silicon trace to 1%, and iron substantially all of the remainder.

JOHN A. ZUBLIN.